CITIVA MEDICAL LLC

EXECUTIVE SUMMARY

Citiva Medical LLC (Citiva Medical) is a New York Limited Liability Company whose members include a strong core of New York-based individuals with healthcare and business experience, with a complement of individuals with national experience in the medical marihuana industry. The members of Citiva Medical have come together with the express purpose of submitting this Registered Organization Application, in order to develop a medical marihuana program achieving the highest standards, operated in keeping with the Compassionate Care Act, and with the guiding principle that all those with a documented need for this service shall receive care, with a special emphasis on children and families in crisis. One of Citiva Medical's founders and its CEO, Josh Stanley, is recognized as a leading expert in the United States in the production of high-quality medical marihuana, and is the co-creator of Charlotte's Web, a strain of medical marihuana that has shown great efficacy in treating pediatric epilepsy.

Locations and Timeline

Citiva Medical's manufacturing site will be in Romulus (Seneca County). The four (4) dispensary sites will be located in Rochester (Monroe County), Cicero (Onondaga County, near Syracuse), Poughkeepsie (Dutchess County, in the mid-Hudson Valley, 80 miles south of Albany) and Manhattan (New York County).

The sites represent a broad geographic spread across the State; a part of Citiva Medical's mission will be the assurance of access to all sites by developing a charity care program, with the approval of New York State, which will include sponsoring a service such as Access-A-Ride for individuals who cannot readily access a dispensary (whether operated by Citiva or another Registered Organization).

At its manufacturing site in Romulus, Citiva Medical has already secured all local approvals needed to begin construction (as documented in this application). The manufacturing site is shovel ready, and preparatory work has already begun, in order to ensure that product delivery deadlines are met. Citiva Medical has an executed lease at its Poughkeepsie dispensary site, and, as with its Romulus manufacturing site, has letters of intent (LOI) to lease and draft leases for its other dispensary sites. Citiva Medical expects to submit executed leases for each of the four (4) sites currently under LOI agreement status during the Application review process.

Citiva Medical has included in this Application a timeline that shows each of the actions it will take to have all approvals, construction and operational activities completed in time to provide medical marihuana to certified patients by January 1, 2016. Citiva Medical has also included a completed Appendix B for each site, together with a detailed code analysis and advanced drawings. In order to provide comfort to the State with respect to its proposed operations, Citiva Medical has also included a $2 million bond in this Application, notwithstanding the advanced progress at its five (5) sites.

Because of the work that its founders have been doing since the passage of the Compassionate Care Act, Citiva Medical brings to this process a reliability with respect to ensuring a "quick to market" product, which it understands is critical to a successful implementation of this program by New York State, on behalf of its constituents.

Quality of Operations

Capitalizing on the experience of its members who have successfully developed and operated medical marihuana programs elsewhere in the United States, Citiva Medical has prepared an Operating Plan that is compliant with 10 NYCRR Part 1004, and that goes well beyond minimum standards to propose a program with an extraordinary focus on quality in the areas of manufacturing, delivery, dispensing and security. In addition to the hundreds of pages of detailed protocols included in the Application, the following items are key elements of Citiva Medical's proposed operations:

- Citiva's quality begins with Josh Stanley, who can legitimately be called the father of cannabidiol (CBD). The incredible national awareness that now exists for CBD is a result of the Charlotte's Web strain that Josh Stanley developed, and the CNN special that featured him and the children whom he [redacted] helped. Today, nearly a quarter of the country has enacted CBD laws, due at least in part to the work of Josh Stanley. In addition to Josh Stanley, Citiva Medical's ownership includes members with nationally recognized expertise in the areas of producing medical marihuana with high quality and consistency in multiple forms (John Pierce, Ph.D.) and medical marihuana legal, operational and regulatory matters (Norton Arbelaez, who [redacted] and has gone on to serve on local and state workgroups, task forces and advisory boards while being directly engaged in the development of Colorado's regulatory framework). The application also includes the presence of Dan Rogers, a nationally renowned expert in cultivating medical marihuana, who will help to ensure that Citiva gets off to a quick and successful start. Collectively, Citiva Medical's team has experience in six (6) highly regulated states.

- From within New York, Citiva Medical's membership includes individuals with medical professional experience (Jack D'Angelo, M.D. and Christopher Perez, M.D.), as well as individuals with expertise in pharmaceutical substance control (Kim Volman, R.Ph. and Simon Field, R.Ph.). The team is rounded out by individuals with strong experience in multiple business arenas, including Michael Caridi, [redacted] Mr. Caridi's knowledge in his field, along with that of the other local members of Citiva Medical, will bring stability to Citiva Medical's operations, particularly in the areas of production, distribution, financial management and start-up capability.

- Citiva Medical's management will be guided by an eight-(8)-member Advisory Board comprised of individuals who are leaders in New York State in the areas of health care delivery and administration, government, law enforcement and security, business and finance, and clergy. Please see Executive Summary Attachment 1 for a brief description of the board and biographies of its members. Two (2) of the board members, Melissa Hilt, R.N. (who has [redacted] and Christine Emerson, N.P., were leading advocates for the passage of the Compassionate Care Act in New York State. The Advisory Board also includes Patrick Dollard, the [redacted] Mr. Dollard's belief in the capability of Citiva Medical [redacted] today has led him to offer his support and efforts to this project.

- Although it will directly employ all staff, Citiva Medical will enhance its quality in the critically important area of security by contracting with the New York-based, nationally recognized security firm of Kroll Associates. Kroll Associates will provide services that will include staff training, review of all security policies and procedures, staffing plans and architectural plans, and general security consultation. Please refer to Executive Summary Attachment 2 for a letter of intent to enter into a consulting agreement.

- Citiva Medical will work with BioTrack THC (the State's selected seed-to-sale IT vendor and an entity with which members of Citiva have previously worked) for software solutions; BESTMSL, a medical education services company; and Medication Management Research Network, which will work with Citiva Medical to enhance patient safety. Citiva Medical will also receive no-cost consulting services regarding enhancing patient care from Staci Gruber, Ph.D., of the [redacted] Please refer to Executive Summary Attachment 3 for letters of intent from the three (3) aforementioned entities and a letter of support from Dr. Gruber.

- Citiva Medical, in partnership and with the direction of New York State, hopes to develop a research component of its program as its operations develop and expand. To that end, please refer to Executive Summary Attachment 4 for letters of support in that regard from the University of Rochester Medical Center and The Center for Discovery from within New York State, and executed memoranda of understanding (MOU) with Cannabics Pharmaceuticals, a renowned biotech company from Israel, and The University of the West Indies.

- As referenced above, Citiva Medical is prepared to work with New York State to develop a formal charity care program that will serve those certified patients with the greatest financial need, and particularly children. To that end, please find under Executive Summary Attachment 5 a proposed formal charity care policy that Citiva Medical looks forward to reviewing with the State.

- Citiva Medical has entered into a Labor Peace Agreement with Local 338, RWDSU/UCFW, which will ensure access to high-quality jobs by unionized labor in New York State. Citiva Medical plans to actively engage its union partner, starting with a seminar to introduce union leadership to Citiva Medical's leadership and to jointly plan for the staffing of Citiva Medical's sites. The Labor Peace Agreement is included under Application Attachment F.

- Citiva Medical is committed to the provision of medical marihuana through Good Agricultural Practices (GAP) and will seek to recruit from within New York State in order to have local expertise in its growing program, together with the national expertise that is part of its existing team.

In summary, Citiva Medical is committed to the highest quality of operations, and believes that its membership and foundation is reflective of that commitment.

Project Cost and Funding

Citiva Medical has developed a capital and working capital budget that is included in this Application. The construction and equipping of all five (5) sites (including transportation and security equipment) will cost $9.5 million, with construction of the manufacturing site representing the majority of the cost. As described in the Application, the manufacturing site construction process has been designed with the dual concepts of speed and capacity, and includes an initial indoor grow facility that will bring the product to market most rapidly, followed by a greenhouse facility that will create substantial additional growth capability needed for the long term. Working capital to ensure that operations are sustained through the initial start-up period is estimated at $2.5 million.

Because it will be operated and owned by a relatively small group of individuals, Citiva Medical feels that it is important to demonstrate to New York State, as it enters into this partnership, its financial capability to develop and support the project on an ongoing basis. Citiva Medical is already well capitalized by its members, as the audited financial statements and other financial information included in this Application document. In addition, one of Citiva Medical's members, Michael Caridi, who in addition to his capabilities documented above is [redacted] will provide the remaining funding needed for capital and working capital, from his [redacted] resources (also documented in this Application). The ability to make and keep Citiva Medical operational does not rely, therefore, on a large corporation's board or an external financial institution. Instead, this project is backed by the capability and direct participation of its members, who are making the necessary funds readily available in the present.

Support for Citiva Medical

In addition to the internal commitment of Citiva Medical's members, there has been a strong show of support for Citiva Medical's proposed operations from across the State, as follows:

- A letter of support from the Town of Romulus, including a statement of zoning approval, as well as letters of support from the Town Supervisors of Gates (Rochester), Cicero and Poughkeepsie, where it will locate dispensaries; the County of Dutchess, where its Poughkeepsie dispensary will be located; and the Seneca County Chamber of Commerce, where its manufacturing site will be located. Citiva Medical also has a letter of support from the Sullivan County Partnership for Economic Development, relative to Citiva Medical's plans for a second manufacturing site in that county, subsequent to becoming operational.

- As noted, University of Rochester Medical Center (URMC), one of the leading academic medical centers in New York State, has provided a letter of support that will provide for a collaborative relationship with Citiva Medical, which URMC calls "an ideal research partner in a clinical setting".

- The Center for Discovery, located in Sullivan County, is the largest provider of services in New York State's Children's Residential Program, under the auspices of the Office for People with Developmental Disabilities (OPWDD). TCFD serves children and adults with complex medical needs, including autism spectrum disorders and severe epileptic conditions. In addition to TCFD's President and CEO, Patrick Dollard, serving on Citiva Medical's Advisory Board, TCFD has provided a letter of support to work with Citiva Medical to develop a second manufacturing site, should this Application be approved.

- Letters from parents with children who currently have or who have died from conditions where medical marihuana would alleviate pain and suffering.

- Petitions specifically in support of Citiva Medical's Application, signed by nearly 1,700 individuals from across New York State, including parents and providers who have been affected by the diseases that the medical marihuana program will take on.

The letters of support are included under Executive Summary Attachments 4 and 6, as well as Application Attachment M, which also includes the petitions.

In conclusion, Citiva Medical is prepared to work collaboratively with New York State on a State-wide basis to provide a medical marihuana program that will have the broadest possible positive impact on the State's residents with a documented need for this service. Citiva Medical has spent many months preparing to become a Registered Organization, and believes that the enclosed Application demonstrates its dedication to ensuring the highest possible quality as it implements this important initiative.

CITIVA MEDICAL

EXECUTIVE SUMMARY ATTACHMENT 1

Citiva Medical Advisory Board

The Citiva Medical Advisory Board is comprised of eight prominent figures with a wide array of backgrounds including: medicine, government, law enforcement and security, business and clergy. The Board is responsible for advising Citiva Medical on issues relevant to their expertise, identifying and creating new business opportunities and industry relationship building.

The Board will meet three times per year. Members will receive a stipend.

Citiva Medical Advisory Board Members:

- **J. Patrick Barrett,** [redacted]
- **Patrick Dollard,** [redacted]
- **Christine Emerson,** [redacted]
- **Melissa Hilt** [redacted]
- **Joseph J. Lhota,** [redacted]
- **James M. McGuire,** [redacted]
- **John Poklemba,** [redacted]
- **The Reverend Dr. W. Franklyn Richardson,** [redacted]

Board Member Biographies

J. Patrick Barrett

J. Patrick Barrett — "Pat" to all who know him — [redacted] He is also Chairman of the Board of Directors of the Whiteface Club Companies and the Olympic Regional Development Authority, both headquartered in Lake Placid, New York. He also serves on the Board of Directors of Adirondack Bank, headquartered in Utica, New York.

Redacted Pursuant to N.Y. Public Officers Law, Art. 6

Barrett serves as a Trustee Emeritus of Syracuse University. In addition, he is the former Chairman of the New York State Ad Hoc Committee on the Future of Racing.

In 1987, Barrett was appointed by President Ronald Reagan as a member of the President's Board of Advisors on Private Sector Initiatives. At President Reagan's request, he also chaired the Vote America Program.

Barrett served as a Delegate to the 1988 and 2004 Republican National Conventions. In 1989, he was elected Chairman of the New York Republican State Committee, a post he held until 1991.

In 2010, he served as Co-Chair of Andrew Cuomo 2010, the current New York Governor's campaign committee.

Pat Barrett was born on [redacted] in [redacted] New York. He was one of [redacted] of the 1954 graduating class of [redacted] In 1959, he earned a Bachelor of Science degree in Economics from Siena College in Loudonville, New York.

[redacted] He makes his home in [redacted]

Patrick H. Dollard

Patrick H. Dollard is [redacted] As a nationally recognized thought leader, Mr. Dollard is one of the field's most innovative visionaries in the development of new models of cost-effective high quality care for special populations. He regularly presents at national and international conferences including The Kresge Foundation, Health Care Without Harm, United Cerebral Palsy and the Autism Roundtable, among others.

Redacted Pursuant to N.Y. Public Officers Law, Art. 6

[redacted] He holds a Masters in Special Education from Long Island University and a B.S. in Adapted Physical Education from the State University of New York – Brockport. Citing his distinguished accomplishments in the field and international reputation, the SUNY system awarded him an Honorary Doctorate of Humane Letters in May 2013.

Christine Emerson, PNP-BC

Christine was raised in [redacted] New York. She received her undergraduate degree at St. John Fisher College. She was a [redacted]

Christine later attended the University of Rochester where she received her Master's degree as a Pediatric Nurse Practitioner. Upon completion of her degree [redacted].

Christine also organized a mission trip to South America for a team of 21 medical professionals to perform cleft lip and palate surgery to underserved children. She has presented several times at the International Cleft and Craniofacial conference as well as at local forums. Christine has as co-authored several papers on craniofacial treatments.

[redacted]

Melissa Hilt

Melissa Hilt is a [redacted] Melissa has a degree in applied sciences from Hudson Valley Community College as well as multiple continuing education courses in rehabilitation, education and public speaking. She earned her registered nursing license in 1999 after passing the New York state NCLEX exam.

[redacted] Melissa has worked with the National epilepsy foundation in fundraising efforts to increase epilepsy awareness and improve research into possible treatments for these rare forms of epilepsy. Working with [redacted] Melissa assisted in the development of the NYS rare disease alliance. She [redacted] have also participated in multiple studies to help learn as much as possible about [redacted] illness. After [redacted] meeting with and learning from various neurologists at Albany medical center pediatric neurology and Boston Children's hospital as well as geneticists and nutritionists at Boston children's hospital and trials of various antiepileptic treatments, Melissa became interested in the medicinal benefits of marijuana. Melissa reviewed what she had learned from lectures with epileptic specialists at Albany medical center and Boston children's hospital to gain further insight into the neurological benefits of marijuana. In January of 2014 Melissa began meeting with various members of the state legislature sharing her knowledge and teaching the legislature of the benefits of marijuana and the [redacted] Melissa actively worked with [redacted] parents and advocates to assist in passage of the New York state Compassionate Care act in June 2014.

[redacted] Melissa's motivating force in life is [redacted] as it is up to those of us who can to do.

Joseph J. Lhota
Senior Vice President, Vice Dean, and Chief of Staff
NYU Langone Medical Center

Joseph Lhota [redacted] Mr. Lhota brings more than 35 years of managerial and policy-making experience to the position.

Mr. Lhota was a candidate for Mayor of the City of New York in 2013.
In 2011 -2012, Mr [redacted] before resigning to run for Mayor of New York City. [redacted]

Mr. Lhota was an integral part of Mayor Rudolph W. Giuliani's core management team in New York City. From 1998 to 2001, he served as Deputy Mayor for Operations, overseeing the day-to-day management of the City government. Prior to this, he was the City's Budget Director with responsibility for managing the City's multi-billion dollar operating and capital budgets. He also served as Commissioner of Finance for New York City.

Preceding his municipal service, Mr. Lhota spent 14 years in investment banking, where he specialized in public finance, serving state and local governments throughout the United States.
Mr. Lhota graduated cum laude from Georgetown University and the Harvard Business School. He serves as a trustee of the City University of New York and is a board member of Cablevision Systems Corporation (CVC), where he serves as chairman of the Audit Committee, and First Aviation Services, Inc. (FAVS).

James M. McGuire

James M. McGuire focuses his practice on complex commercial litigation, including sophisticated business disputes, white collar and securities litigation and regulatory matters.

Redacted Pursuant to N.Y. Public Officers Law, Art. 6

In addition, Mr. McGuire has litigated appeals before New York State appellate courts, including the New York State Court of Appeals; he also has served as an arbitrator in an International Chamber of Commerce arbitration and as a mediator in connection with two actions filed in the United States District Court for the Southern District of New York.

Mr. McGuire has served in a variety of roles in state government, including most recently as an Associate Justice in the First Judicial Department of New York State's Appellate Division and as a Justice in the 11th Judicial District for the Supreme Court of the State of New York.

Mr. McGuire also previously served as Chief Counsel to New York State Governor George E. Pataki. His responsibilities included advising the Governor on all pending legislation, litigation and legal issues affecting the day-to-day operations of the state, and supervising the drafting of all legislation proposed by the Governor.

He also advised the Governor on all legal issues arising out of the 9/11 terrorist attacks, and initiated and supervised landmark litigation between the Governor and the Legislature over their respective constitutional roles in the budget process. Before serving as Chief Counsel, Mr. McGuire served as First Assistant Counsel to the Governor, where his responsibilities included advising the Governor on criminal justice legislation and legal matters relating both to executive branch agencies with criminal justice responsibilities and to the Judiciary.

In addition, Mr. McGuire served as the Deputy Chief Counsel of the Appeals Bureau of the New York County District Attorney's Office, where he argued and supervised appeals before state and federal appellate courts; as Senior Investigative Counsel in the Rackets Bureau, he conducted and supervised investigations and trials involving official corruption and organized crime. As Deputy Counsel to the New York State Commission on Government Integrity, a gubernatorial commission established to investigate matters relating to government integrity and recommend reforms, he conducted and supervised investigations and handled litigation brought by and against the commission.

Education
Fordham University, B.A., 1975, magna cum laude
Cornell University Law School, J.D., 1980, cum laude

Court Admissions
United States Court of Appeals for the Second Circuit
United States District Court for the Eastern District of New York
United States District Court for the Southern District of New York

Bar Admissions/Qualifications
New York

Memberships
The Chief Judge's Task Force on Commercial Litigation in the 21st Century

John Poklemba

On November 1st, 2012, Mr. John Poklemba joined American Transit Insurance Company as General Counsel. Prior to becoming a full time employee, Mr. Poklemba represented the Company in various matters as a private attorney in the Albany, New York area.

Upon graduation with honors from St. John's University School of Law, Mr. Poklemba began his legal career in 1975 as Law Secretary in the New York State Supreme Court. He then served as Deputy Counsel in the Office of Court Administration from 1977 to 1981 and as Chief Appellate Law Assistant, New York State Appellate Division, Fourth Department, from 1981-1984.

In February 1984, John was appointed Chief Counsel to the Governor's Director of Criminal Justice. In this capacity, he was responsible for all legal duties involved in supervising and coordinating the eight New York State Criminal Justice Agencies.

In December 1987, Governor Mario Cuomo appointed John to the twin posts of New York State Director of Criminal Justice and Commissioner of the Division of Criminal Justice Services. In the latter office, he supervised the State's Criminal Justice Information and Planning Agency.

As Director of Criminal Justice, he served as the Governor's Chief Criminal Justice Advisor and as the State's primary spokesperson and policy maker in the criminal justice field. Among his most important accomplishments were the passage of the Organized Crime Control Act, the development of comprehensive drug enforcement through the Statewide Drug Enforcement Task Force, and nationally recognized technological advances such as the Statewide Criminal Justice Data Communications Network and the Statewide Automated Fingerprint Identification System. In addition to his work in law enforcement, Mr. Poklemba was a leader in modern correctional innovation. His major initiatives included the Shock Incarceration Program, the Earned Eligibility Program, and the establishment of five comprehensive alcohol and substance abuse treatment facilities.

Mr. Poklemba moved into private law practice in [redacted] In 1992, he was appointed Chairman of the Governor's Judicial Screening Committee for the Third Judicial Department and a member of the New York State University at Albany Council. In 2003, he was appointed by Governor George Pataki as a member of the Statewide Emergency Communications Committee. He also served as Legislative Counsel to the New York City Patrolmen's Benevolent Association, the New York State Association of Chiefs of Police, and the New York City Deputy Sheriffs Association. On February 1, 2013, Mr. Poklemba was appointed by Governor Andrew Cuomo as a member of the newly created New York State Gaming Commission. [redacted]

The Reverend Dr. W. Franklyn Richardson

[redacted] A graduate of Virginia Union University, Dr. Richardson received his Divinity degree from Yale University Divinity School and his Doctorate of Ministry as a Wyatt Tee Walker Fellow from the United Theological Seminary in Dayton, Ohio. Dr. Richardson has received extensive recognition for his dynamic and impactful leadership in ministry with Honorary Doctor of Divinity degrees from several colleges and universities including his alma mater, Virginia Union University.

In 1989, Dr. Richardson was inducted into the Martin Luther King, Jr., Board of Preachers at Morehouse College in Atlanta, Georgia. His tireless efforts to defend and promote justice, fairness, and equality for all people were recognized in 2013, when Morehouse paid tribute to Dr. Richardson once again by inducting him into its International Hall of Honor. Established to celebrate extraordinary persons of the twentieth and twenty-first centuries who have made significant contributions to the global nonviolent movement for civil and human rights, Dr. Richardson's portrait now resides in the Martin Luther King Jr. International Chapel, alongside images of the greatest leaders of the modern era.

A longtime community builder and organizer, Dr. Richardson has played a pivotal role in the grass root efforts of reestablishing a cultural bridge between community and education. He is singularly responsible for leveling the ground by fighting for equitable opportunities in public education in the Mount Vernon community and he has manned the front lines in the battle for just and affordable housing development. His steadfast efforts have

resulted two Grace Church related Community Development Corporations which have constructed more than 100 million dollars in affordable housing to date.

[redacted]., which thrust him into the international arena of the World Council of Churches where he served on its prestigious Central Committee. The World Council represents more than 400 million Christians in 150 nations. He also served on the boards of the Congress of the National Black Churches, the National Urban League, and the Constituency for Africa. A life member of the National Association for the Advancement of Colored People, Dr. Richardson is also a member of the Sigma Pi Phi Fraternity.

This distinguished theologian is an internationally sought after preacher, lecturer and facilitator, having preached on several continents. For the past thirty years, he has been heard throughout the tri-state area on WVOX radio and is viewed on national television every Sunday morning. He is the author of the widely acclaimed, Power of the Pew, and has written extensively on faith-based community developments. Of note: "Mission to Mandate," in the National Urban League's State of Black America. In addition to such articles, Dr. Richardson's most powerful sermons can be found in publications including, Keep the Faith (Welcome Rain Publishers) and Joy to the World (Simon & Schuster).

A man of enormous compassion, intuitive reason, absolute commitment, and an incisive mind, Dr. Richardson demonstrates in his persona the marvelous union of passion and intellect. He is a national advocate for economic equity and his counsel and advice are widely solicited in several major corporate boardrooms throughout America. Dr. Richardson currently serves as a director or trustee for Pepsi Cola (Ethnic Advisory Board); the Ujamaa Community Development Corporation; the Harvard University Divinity School Summer Leadership Institute for Church-based Community and Economic Development; Comcast Corporation and NBC Universal Joint Diversity Council; and Grace Community Development Corporation. He is Chairman of the Board of the National Action Network; the Conference of National Black Churches; American Legacy Magazine; and Virginia Union University.

[redacted]

CITIVA MEDICAL

EXECUTIVE SUMMARY ATTACHMENT 2

Kroll

June 2, 2015

Mr. Michael Caridi
Chief Operating Officer
Citiva Medical

Sent via email: mcaridi@citivamedical.com

Project: Security Consulting Services

Dear Mr. Caridi

Kroll is pleased to provide Security Consulting services for Citiva Medical as of June 2, 2015 in accordance with the Master Terms and Conditions dated April 15, 2015. The project will consist of the following:

- General security consulting services
- Security procedures review to ensure adequacy and compliance with the requirements set forth by NYS DOH.
- Develop a security staffing plan to identify security staffing needs for each property to ensure security staffing is in compliance with NYS DOH requirements.
- Security systems review of current architectural plans for each property to develop an overall security systems plan and ensure systems are in compliance with NYS DOH security requirements.

We thank you for the opportunity and we look forward to providing Citiva Medical with Security Consulting services. If you have any questions, or require any additional information please contact me at 212-833-3366 or thorner@kroll.com.

Sincerely,

Kroll

Timothy V. Horner
Managing Director

Kroll Associates, Inc.
600 Third Avenue, 4th Floor
New York, NY 10016

kroll.com
T +1 212.593.1000
F +1 212.593.2631

Certain Kroll companies provide investigative services.
See www.kroll.com/licensing for state licensing information.

Kroll.

USA

Daniel E. Karson

[redacted]
Kroll Associates

dkarson@kroll.com

T +1 212.833.3266

600 Third Avenue
4th Floor
New York, NY 10016

EDUCATION & CERTIFICATIONS

New York University School of Law, J.D.

Ithaca College, B.A., (former member, Board of Trustees)

PROFESSIONAL AFFILIATIONS

Admitted to the Bar, New York State, U.S. District Courts, Southern and Eastern Districts, Second Circuit, U.S. Supreme Court

Member, Government Ethics Committee, New York City Bar Association

Association of Corporate Counsel Greater New York Chapter Member Board of Directors 1996–2011

Daniel E. Karson is [redacted]. Dan has more than 40 years' experience directing investigations of business crimes. His practice areas include major fraud investigations, the Foreign Corrupt Practices Act, litigation support, contests for corporate control, Internet crimes, financial crimes, asset searches, product counterfeiting and due diligence.

[redacted]

Prior to joining Kroll, Dan was general counsel and assistant commissioner of the Department of Investigation of the City of New York, where he conducted major fraud investigations. At DOI, he was also the first director of New York City's Inspector General program and supervised the internal investigations offices of 24 mayoral agencies. Previously, Dan worked as an assistant district attorney of Bronx County, serving as chief of Narcotics Investigations.

PROFESSIONAL EXPERIENCE

Redacted pursuant to N.Y. Public Officers Law, Art.6

continued

Kroll.

[redacted]
USA

Daniel E. Karson

[redacted]
Kroll Associates

Redacted pursuant to N.Y. Public Officers Law, Art.6

CONTINUING LEGAL EDUCATION/PUBLIC COMMENTARY

Dan has served as chair or panel member at more than 100 programs on conducting investigations. He is a CLE instructor on the subjects of due diligence, law and investigations and conducting compliant investigations.

MEDIA EXPERIENCE

Dan has been interviewed frequently on television and cited as an authority on investigations in articles published in The New York Times, The Wall Street Journal, Bloomberg media publications, Reuters and numerous other media.

- **Print**
  Barron's, The New York Times, Time Magazine, The Wall Street Journal and New York Law Journal
- **Broadcast**
  Bloomberg, CNBC, CNN and Reuters

Kroll.

USA

Joseph A. Spinelli

[redacted]

joseph.spinelli@kroll.com

T +1 212.833.3334

600 Third Avenue
4th Floor
New York, NY 10016

EDUCATION & CERTIFICATIONS

John Marshall Law School, J.D.

Certified Fraud Examiner

Joseph Spinelli is a [redacted]. In a career spanning more than 30 years across both the private and public sectors, Joe has been a pre-eminent leader in multiple fields, including white collar investigations, anti-bribery and corruption, FCPA, risk management, monitorships, criminal investigations and forensic accounting.

Redacted pursuant to N.Y. Public Officers Law, Art.6

Joe's earlier career in public service included eight years in the ground-breaking role of Inspector General for New York State. The first to ever hold this position, Joe led fraud and corruption investigations for state government agencies and authorities. During this time, he co-authored the N.Y. State Internal Control Act of 1987, which required state agencies to conduct risk assessments as part of a proactive approach to fraud prevention. Joe also served as Assistant Director of Criminal Justice for the State of New York, responsible for investigating criminal complaints and fraud allegations throughout state government. Joe assisted the states of Ohio, Pennsylvania and Louisiana in formulating their Inspector General programs.

Joe started his career as a Special Agent for the Federal Bureau of Investigation. Based in both the New York and New Haven field offices, he was involved in several high-profile cases.

In recognition of his exemplary achievements as a practitioner in the field of anti-bribery and corruption investigations, Joe has been selected to serve on numerous boards and commissions. These have included the Board of Regents of the Association of Certified Fraud Examiners, the world's largest anti-fraud organization; acting Chairman of the New York State Commission on Public Integrity; and Chairman of the Audit and Compensation Committees for the New York Racing Association Board.

Kroll.

USA

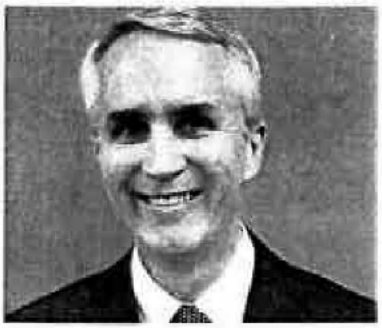

Richard T. Faughnan

[redacted]

richard.faughnan@kroll.com

T +1 212.833.3274

600 Third Avenue
4th Floor
New York, NY 10016

EDUCATION & CERTIFICATIONS

George Washington University, National Law Center, J.D., *cum laude*

Rutgers College, B.A., *magna cum laude*

Admitted to the Bar in New York and New Jersey

PROFESSIONAL AFFILIATIONS

American Bar Association

Association of the Bar for the City of New York

Federal Bar Council

Richard T. Faughnan is [redacted]. Richard focuses on corporate investigations, monitorships and compliance matters.

[redacted] Prior to this, Richard was an Assistant U.S. Attorney for the Eastern District of New York for more than thirteen years, where he served as Chief of the Public Integrity Section. During his time with the Eastern District, he directed numerous investigations and prosecutions into an array of criminal activity committed by corporations and individuals, including bank and securities fraud, mail and wire fraud, money laundering, bribery and federal tax offenses. Richard began his career as an Assistant District Attorney in Kings County, New York, where he served as Deputy Chief of the Appeals Bureau. Richard's extensive experience as a federal and state prosecutor gives him a thorough understanding of investigations into a wide range of fraudulent conduct across industry sectors.

PROFESSIONAL EXPERIENCE

Redacted pursuant to N.Y. Public Officers Law, Art.6

continued

Kroll.

USA

Richard T. Faughnan

Redacted Pursuant to N.Y. Public Officers Law, Art. 6

Kroll.

Richard T. Faughnan

Redacted Pursuant to N.Y. Public Officers Law, Art. 6

Kroll.

USA

Timothy V. Horner

Redacted Pursuant to N.Y. Public Officers Law, Art. 6

thorner@kroll.com

T +1 212.833.3366
F +1 212.593.2631

600 Third Avenue
4th Floor
New York, NY 10016

EDUCATION & CERTIFICATIONS

Long Island University, MBA, Finance

Adelphi University, BA, Business Administration and Management

FBI National Academy, Virginia

Secret Service Law Enforcement Training Program, Washington, D.C.

Tim Horner is a [redacted] Kroll's Security Risk Management practice provides clients with comprehensive coverage for myriad security risks through the resources and services of our Security Design & Engineering, Security Consulting, Operational Security Services, and Resilience Consulting teams. With over three decades of security and law enforcement experience, Tim specializes in security consulting, crisis management and investigations for Kroll's individual and corporate clientele. Tim brings to his clients a deep knowledge of the development, implementation and conduct of investigations, compliance programs, threat management, travel security and executive protection.

Tim joined Kroll in 2001 after a distinguished career with the New York City Police Department retiring as a Captain. During his tenure he served in numerous commanding officer level positions within the Intelligence, Detective, Internal Affairs, Community Affairs and Patrol Divisions. In these positions he implemented security measures in response to credible threats against public officials, dignitaries and government properties, and coordinated protection details for high-profile dignitaries and New York City events.

Tim coordinated a wide variety of criminal investigations, including highly confidential intelligence investigations, homicide and white-collar crimes, involving local, state, federal and international law enforcement agencies. He has implemented proactive crime prevention, community outreach and crisis response strategies for the City of New York. In addition, he managed the NYPD's security consulting division that provided expert security advice to government agencies, corporations and private individuals.

PROFESSIONAL EXPERIENCE

Redacted Pursuant to N.Y. Public Officers Law, Art. 6

continued

Kroll.

Timothy V. Horner

Redacted Pursuant to N.Y. Public Officers Law, Art. 6

Kroll.

USA

Timothy P. Ryan

[redacted]

tpryan@kroll.com

T +1 212.833.3461

600 Third Avenue
4th Floor
New York, NY 10016

EDUCATION & CERTIFICATIONS

Rutgers University School of Law, J.D.

University of Maryland, University College, M.S., Information Technology and Assurance

Kean University, B.A.

Certified FBI Computer Analysis and Response Team Forensic Examiner

SANS GCIH Certification (Cyber Incident Handling and Hacker Tools)

Admitted to the Bar in Arizona and New Jersey

Timothy P. Ryan is [redacted]. Prior to joining Kroll, Tim had a distinguished career as a Supervisory Special Agent with the Federal Bureau of Investigation (FBI), where he supervised the largest cyber squad in the United States. An expert in responding to all forms of computer crime, attacks and abuse, Tim has led complex cyber investigations involving corporate espionage, advanced computer intrusions, denial of service, insider attacks, malware outbreaks, Internet fraud and theft of trade secrets. Tim also served as ccting director of the FBI's New Jersey Regional Computer Forensics Lab, one of the nation's largest, state-of-the-art digital forensic laboratories. As a member of the FBI's elite Computer Analysis and Response Team, Tim also conducted numerous computer forensic examinations.

Tim has provided cyber expertise to state and local law enforcement on investigations of crimes, including homicides, stalking, missing children, cyber-bullying and internal affairs. A certified FBI instructor, he developed a cyber-based curriculum and trained hundreds of law enforcement and private professionals in evidence acquisition, security policy and implementation, breach response and mitigation, hacker methodology and employee Internet safety.

[redacted] Tim has been interviewed and quoted by numerous media outlets, among them *The Wall Street Journal*, CNN, *Newsweek*, and *USA Today*.

Before joining the FBI, [redacted] Earlier, he served as Military Police with the U.S. Army during Operation Desert Shield and Desert Storm, for which he was awarded multiple commendations for service and actions on duty.

CITIVA MEDICAL

EXECUTIVE SUMMARY ATTACHMENT 3

BioTrackTHC
The Only Seed To Sale Solution

3101 N. Federal Highway
Suite 400
Fort Lauderdale, FL 33306
800.797.4711

Date: 5/19/2015

Company: Citiva Medical Management

Reference: BioTrackTHC™ New York Letter of Intent

Dear Mr. Lehan,

BioTrackTHC™ provides effective cutting edge technology solutions for the emerging legal marijuana industry that (1) prevents product theft; (2) Assists business owners with running their cultivating, packaging, and retail operations more profitably and to better comply with the law; (3) All without leaving sensitive business and consumer data vulnerable in the cloud. Specifically, BioTrackTHC™ is the industry's only true seed to sale software system with enterprise resource planning, complete inventory tracking, point of sale, marketing, financial reporting and regulatory compliance features. And because it is a server based system with advanced security features, customers can rest assured that no one, not even the BioTrackTHC™ team, can access their business or consumer information without their permission.

This document confirms BioTrackTHC™ has entered into a formal agreement with Citiva Medical Management is to provide software solutions guaranteed to meet published New York State Department of Health reporting, regulation, and compliance guidelines for legal marijuana producer, processor and retail facilities in the event that you obtain an authorized license.

We appreciate your consideration of BioTrackTHC™ and look forward to assisting you in your efforts to secure a license.

Yours truly,

Alexandra Winkler
Administrator of Sales

Your Signature: _____

Richard Lehan
Director of Information Technology
Citiva Medical Management LLC.

BESTMSLs
1133 Broadway, Suite 223
New York, NY 10010
www.bestmsls.com
646-344-3014

BESTMSLs

6/2/15

To Whom It May Concern:

BESTMSLs is a contract medical affairs organization whose specialty is medical education, communicating complex scientific information to healthcare practitioners on behalf of the pharmaceutical and biotech industries so they can make the most informed and appropriate decisions with their patients.

BESTMSLs will be working with Citiva Medical to provide a team of highly trained MDs, PharmDs, PhDs, and other healthcare providers to educate healthcare practitioners on the science of medicinal cannabis and the unmet need in many therapeutic areas.

Educational areas where the MSLs are utilized include one on one meetings with physicians, responding to dosing or product questions from physicians, hosting educational group meetings, convening advisory boards to determine needs of healthcare providers, presenting new data at national and international Meetings, and various other scientific and educational venues all in support if increasing medical education effectiveness.

The decision to deploy a team of Medical Science Liaisons demonstrates the commitment of Citiva Medical to providing education and resources to healthcare practitioners so they can better understand the science and be empowered to make appropriate decisions for their patients.

With over 25 years of medical education experience, we are thrilled to be in partnership with Citiva Medical as we enter a new era of the medicinal use of cannabis in the state of New York.

Sincerely,

David Best, MD MBA

Managing Director

Michael Banks, MD

Managing Director

What is a Medical Science Liaison?

The Medical Science Liaison (MSL) is a specific role within the pharmaceutical, biotechnology, medical device, CRO and other health-care industries. MSLs have advanced scientific training and academic credentials generally consisting of a doctorate degree (Ph.D., PharmD., M.D.) in the life sciences. They concentrate on a specific Therapeutic Area (i.e. Oncology, Cardiology, CNS, Pulmonary, Hematology, Surgery, Women's Health Care, etc) and disease state.

Medical Science Liaisons are vital in the success of a company. They work throughout a product's lifecycle, help to ensure that products are utilized effectively, serve as scientific peers and resources within the medical community, and are scientific experts to internal colleagues at companies. However, the primary purpose of the MSL role is to establish and maintain peer-peer relationships with leading physicians, referred to as Key Opinion Leaders (KOL's), at major academic institutions and clinics.

Medication Management Research Network

June 3, 2015

Dr. Howard Zucker
Commissioner
New York State Department of Health
Corner Tower
Empire State Plaza
Albany, New York 12237

The University at Buffalo - Medication Management Research Network Patient Safety Organization (MMRN PSO) supports Citiva Medicals, LLC's application to receive one of the five licenses to cultivate and dispense medical marijuana in New York State. In the effort to promote patient safety, Citiva Medical will execute a voluntary participation agreement to incorporate the services of the MMRN PSO.

The Patient Safety Organization (PSO) component of the Medication Management Research Network at the University at Buffalo was established and received federal certification from the Agency for Healthcare Research and Quality (AHRQ) in January 2010 (recertified 2013). The mission of the MMRN PSO is to engage in meaningful quality improvement collaborations with health care sites in New York utilizing health information technology to improve quality of care, reduce adverse drug events, and enhance patient safety. PSOs serve as independent, external experts who can collect, analyze, and aggregate patient safety events locally, regionally, and nationally to develop insights into the underlying causes of patient safety events.

Patient Safety Activities Include:
1. Efforts to improve patient safety and quality of care
2. Collection/Analysis of de-identified medication profiles
3. Development and Dissemination w/ respect to improving patient safety
4. Using data to encourage safety and providing feedback to minimize patient risk
5. Utilization of qualified staff to perform any of the above
6. Operation of patient safety evaluation system and provision of feedback to participants

The Medication Management Research Network is happy to participate in this initiative to promote patient safety and clinical care for these eligible patients.

Sincerely,

Jeff Lombardo PharmD, BCOP
Research Assistant Professor
UB School of Pharmacy and Pharmaceutical Sciences

Patient Safety Officer
Patient Safety Organization
Medication Management Research Network
Translational Pharmacology Research Core
NYS Center of Excellence in Bioinformatics and Life Sciences
701 Ellicott St Buffalo NY 14203
Email: jcl2@buffalo.edu P: 716-881-7589 www.bioinformatics.buffalo.edu

Harvard Medical School
Department of Psychiatry
ASSOCIATE PROFESSOR
OF PSYCHIATRY

McLean Hospital
Brain Imaging Center
DIRECTOR
COGNITIVE AND CLINICAL
NEUROIMAGING CORE

STACI A. GRUBER, PH.D.

May 22, 2015

Josh Stanley, Founder
Citiva Medical LLC
7378 Amboy Road
Staten Island, NY 10307

Dear Mr. Stanley,

I am writing to express my enthusiastic support of Citiva Medical, and to formalize my commitment to serving as an unpaid consultant to the Citiva Medical team. As you know, my clinical research experience has included a focus on both recreational and medical marijuana use, and I am therefore delighted to provide consultation on projects related to advancing the science behind the therapies. For example, to date, no empirical studies of the specific impact of medicinal marijuana on cognition or brain function have been published, despite the fact that medicinal marijuana has been available in some states since the mid 1990s. Citiva Medical is clearly invested in facilitating both top tier clinical care and research endeavors which are likely to help shape public policy and foster public health initiatives.

Your extensive experience in the medicinal cannabis industry and your dedication to advancing the science of cannabinoid-based medicines is impressive. Citiva Medical is uniquely poised to make highly significant contributions to both clinical and research endeavors related to cannabinoid-based therapies, and I wish you the best of luck in your application to New York State.

Sincerely,

Staci A. Gruber

McLean Hospital, 115 Mill Street, Belmont, Massachusetts 02478-9106, USA
Telephone (617) 855-2762 – FAX (617) 855-3713 – e-mail gruber@mclean.harvard.edu

CITIVA MEDICAL

EXECUTIVE SUMMARY ATTACHMENT 4

Mark B. Taubman, MD
CEO, University of Rochester Medical Center and UR Medicine
Dean, School of Medicine and Dentistry
Senior Vice President for Health Sciences

UNIVERSITY of ROCHESTER MEDICAL CENTER

MEDICINE of THE HIGHEST ORDER

June 1, 2015

Dr. Howard Zucker
Commissioner
New York State Department of Health
Corning Tower
Empire State Plaza
Albany, New York 12237

Dear Commissioner Zucker:

The University of Rochester Medical Center (URMC) supports Citiva Medical, LLC's application to receive one of the five licenses to cultivate and dispense medical marijuana in New York State.

With the passage of the Compassionate Care Act, we believe New York is well-positioned to be at the forefront of medical marijuana research and patient care. In order to achieve that goal, we believe it is critical that clinical research and policy analysis be a primary focus of this program.

Several months ago, we began to meet with the principals of Citiva Medical, and we believe that a group such as this could provide a significant service to our region. Over the course of these meetings, we had an opportunity to meet Josh Stanley, and the organization seems to have the scientific and technical expertise to provide the services required by a registered organization. Moreover, Mr. Stanley and Citiva Medical have been actively involved in the community. Citiva Medical has held community events across New York to better understand the needs of this state's patients. Mr. Stanley has devoted countless hours to meeting with parents of sick children and providing them with important information on medicinal cannabis.

We believe it is vital that research is conducted in order to further inform efficacy and ensure the safest environment for patients accessing this method of treatment. Through the course of several meetings, we have explored how Citiva Medical could help URMC with regard to research related to medical conditions covered by the Compassionate Care Act. Citiva has over a century of combined experience in the medicinal cannabis industry and in clinical healthcare. Citiva's considerable experience developing a wide variety of medicinal strains makes their organization an ideal research partner in a clinical setting. We would be very comfortable working more directly with Citiva Medical if the Department of Health granted it a license.

We further express our interest in this application stemming from Citiva's commitment to ensuring access for all patients regardless of resources. We believe that Citiva is committed to supporting New York's mission of enhancing quality of life for patients throughout the state. To support this mission, Citiva Medical has committed to establishing and funding a charitable organization, Strains of Hope, to ensure access to this treatment option for eligible patients, regardless of their ability to pay.

Thank you for your consideration of Citiva Medical, LLC's candidacy and licensure in this important program.

Sincerely,

Mark B. Taubman, M.D.

601 Elmwood Avenue · Box 706 · Rochester, NY 14642
585.275.0017 · 585.273.1059 fax · Mark_Taubman@urmc.rochester.edu · www.urmc.rochester.edu

THE CENTER FOR DISCOVERY, INC.

June 1, 2015

Josh Stanley
Citiva Medical LLC
7378 South Amboy Road
Staten Island, New York 10307

Dear Mr. Stanley:

This letter indicates the intent of The Center For Discovery, Inc. ("The Center") to lease to Citiva Medical LLC ("Citiva"), a parcel of land of approximately 5 acres, to be subdivided from a larger parcel owned by The Center, designated as SBL TH 7.-1-39.1, located between Old Route 17 and Route 17 / I-86 in the Town of Thompson, Sullivan County, on terms yet to be determined. Both The Center and Citiva have examined the parcel and have determined that it is appropriate for growing and processing the cannabinoid products that would be produced by Citiva should it be awarded a Registered Organization license by New York State under the Compassionate Care Act. The lease will be conditioned upon Citiva's award of a Registered Organization license under New York's Compassionate Care Act.

The Center for Discovery is the largest provider of services in New York State's Children's Residential Program, providing residential, educational, health and clinical services to children and adults with complex medical needs, including autism spectrum disorders. The Center has collaborated with many notable academic and scientific researchers and universities investigating the benefits of cannabinoids for the individuals that we serve. The lease will be accompanied by a Memorandum of Understanding in which The Center and Citiva set forth collaborative efforts in fostering research in the use of cannabinoids to treat individuals with various medical conditions, including conditions such as those experienced by individuals served by The Center.

Subject to further negotiation, the lease may also include construction, consultation and other services to be performed by The Center for Citiva in connection with its licensed business.

Neither party shall be bound by this Letter of Intent unless and until a mutually agreed-upon lease is fully executed by the parties. Thank you.

Very truly yours,

Patrick H. Dollard,
President and CEO

Cannabics™
Cannabics Pharmaceuticals Inc.

#3 BETHESDA METRO CENTRE
SUITE 700
BETHESDA, MD 20814

Tel (877) 424-2429
Cannabics.com

June 3rd, 2015

MEMORANDUM OF UNDERSTANDING

THIS MEMORANDUM OF UNDERSTANDING ("MOU") made this June 3rd, 2015, by and between CANNABICS PHARMACEUTICALS, INC., (the "Company") a publicly traded Nevada Corporation, and by CITIVA MEDICAL, ("Citiva") a New York Corporation; together "the Companies"

WITNESSETH:

WHEREAS, Cannabics Pharmaceuticals Inc. is a renowned Israeli Bio-Tech company publicly traded on the US markets (CNBX) and engaged in the development of Cannabinoid based medicine. The Company has successfully developed standardized delivery systems and personalized anticancer therapies based upon cannabis originated compounds, as well as novel biotechnology tools and bioinformatics. The Company's 1st patent is "Cannabics SR", the world's first extended release cannabis capsule. Their 2nd patent just filed with the USPTO within the last 30 days covers its System and Method for High Throughput Screening of Cancer Cells.

Cannabics' team of scientists has developed a high throughput screening system which is specifically designed to give personalized antitumor treatments to cancer patients. In this proprietary system, biopsies are treated, in-vitro, with innumerous plant extract combinations and the antitumor effects are screened and calculated. The Company plans to complete the development of this novel and sophisticated technology and license it by the end of 2016.

Further, Cannabics Pharmaceuticals Inc. is specifically licensed by the Israeli Ministry of Health's Israeli Medical Cannabis Agency to work with and commission research upon Cannabis and its properties, and has a state of the art laboratory for this purpose. The company's first trial for catechsia is scheduled to begin at the world renowned Rambam Hospital in northern Israel within the next 60 days.

WHEREAS, Citiva – Is a New York based company which seeks to provide cutting-edge cannabinoid based products and to establish treatment programs to target specific illnesses and diseases, including childhood epilepsy, pediatric cancer, central nervous disorders, and other ailments. Additionally one of the underlying aims of the company is to conduct research and develop partnerships with Universities, Hospitals and Institutions to establish New York as the global epicenter for cannabinoid research.

CITIVA is an attractive partner to Cannabics Pharmaceuticals due to its medical vision, values and particularly its involvement with the NGO Strains of Hope, whose goals and outlook is shared by the Company.

WHEREAS; the Companies believe that their scientific goals and interests are symbiotic, and by working in tandem, they can both jointly progress further towards both their individual and shared goals;

THEREFORE, the Parties hereby confirm their mutual desire to memorialize these preliminary understandings and hereby express their intent as expressed under the terms of this MOU.

NOW, THEREFORE, in consideration of their mutual promises and agreements, the Parties have contemplated the following prospective ventures between them:

1. Citiva and Cannabics Pharmaceuticals are desirous to work in collaboration to create new and innovative cannabinoid based medicinal products to be supported by clinical evidence. The parties shall seek to collaborate with the current oncology community in New York state.

2. Such an undertaking is understood to encompass collaboration in regards to cannabinoid research, clinical studies, product development, and related matters including but not limited to ailments such as cancer, diabetes, neuropathies/pain management, neuro-degenerative diseases and other related maladies. All costs to be borne by Citiva.

3. It is proposed that Citiva shall request from Cannabics Pharmaceuticals certain chemiological information based upon certain select strains of Cannabis which Citiva believes are medically useful towards its purpose. Cannabics Pharmaceuticals would carry out extensive laboratory testing and proprietary analysis and provide said data to Citiva. The next contemplative phase would be for Cannabics Pharmaceuticals to initiate subjective, observational, and finally clinical studies upon such strains, given the parameters of authorized medical institutions at that time.

4. It is fully understood by Citiva that Cannabics is currently engaged in an exclusive engagement with another entity which gives geographic coverage to all 50 US states, for its time released capsules, and that prior to any definitive Agreement being signed, an executed Waiver must be provided by that partner with regards to the state of New

York. Said Agreement does not hinder utilization of the Company's System and Method for High Throughput Screening of Cancer Cells. Any ongoing supply of medically licensed cannabis oils in New York shall be for Citiva to supply.

Further each signator hereto promises complete confidentiality regarding this MOU.

NB - this Memorandum of Understanding is purely aspirational, and as such does not bind nor obligate either party to the other until execution of a definitive Agreement between them.

Itamar Borochov, Dir. CEO *on behalf of*
Cannabics Pharmaceuticals, Inc.

Josh Stanely, - CEO. *on behalf of*
Citiva Medical, LLC

MEMORANDUM OF UNDERSTANDING

(Hereinafter referred to as the "MOU")

Between

THE UNIVERSITY OF THE WEST INDIES

(Hereinafter referred to as "UWI Mona")

And

CITIVA MEDICAL

WHEREAS the University of the West Indies, a regional institution established by Royal Charter, with Centre Headquarters at Mona, Kingston 7, Jamaica, was established to foster research and promote tertiary education in the Caribbean;

AND WHEREAS Citiva Medical a company duly incorporated in the State of New York and whose address for the purposes hereof is 7378 Amboy Road, Staten Island, New York 10307 seeks to provide cutting edge cannabinoid based products and to establish treatment programs to target specific illnesses and diseases, including childhood epilepsy, cancer, central nervous disorders, and other ailments, in addition to which, one the underlying aims of the company is to conduct research and develop partnerships with Universities, Hospitals and Institutions to establish Jamaica and the Caribbean as the global epicenter for cannabinoid research.

AND WHEREAS Parties recognize the benefits of collaborating their expertise and efforts.

THEREFORE IT IS AGREED AS FOLLOWS

1. Purpose

The Parties recognize the benefits to be derived from increased collaboration, cooperation and interaction for the further promotion and understanding of the use of medical Cannabis in regards to cannabinoid research, clinical studies, clinical product development, and related matters including but not limited to ailments such as cancer, diabetes, neuropathies/pain management, neuro-degenerative diseases and other related maladies (hereafter, collectively referred to as the "Field").

The purpose of this MOU is to define the areas for fundamental, academic research in which the Parties desire to work together in the future for their mutual benefit to foster a collaborative framework between UWI Mona and Strains of Hope in the Field with a view to benefiting from each other's initiatives and working procedures and to support collaboration among the researchers associated with both Parties.

2. Scope

This MOU sets forth the intentions of the Parties for increased collaboration, cooperation and interaction and does not create any legally binding commitments. If the Parties later agree to undertake specific joint projects with legally binding obligations, they will develop separate written agreements for such projects, setting out each Party's contributions, deliverables, and budgets.

The Parties intend to:

Pursue collaboration on fundamental, academic research, related to the development of the Medical Cannabis industry throughout the world, for example:

Parties agree to the respectful, and open sharing of data, private IP, technological processes and research with the confidentiality outlined herein, provide support with the drafting of legislation pertaining to the decriminalization of marijuana for medical purposes, the utilization of UWI's capabilities in analytical botanical chemistry and biological areas and UWI's greenhouse/atrium for small scale, controlled research growth focusing on all aspects of strain, including growing conditions, DNA sequencing, etc. Strains of Hope will comply with all of the requirements, rules and regulations of UWI, including safety, health, security, access and operational practices.

With the prior written consent, both Parties may use any collaboration results stemming from any aspect of the partnership in the news/ media, or for other publication including but not limited to other research purposes. Any such use by either Party must make explicit reference to the report as well as to both Parties involved in this MOU.

Parties agree to work toward the development of future protocols concerning the following: ownership of IP developed via partnership, parameters of future development, Jamaican patent process, taxation of equipment and productive needs.

3. Costs

Each Party will be responsible for its own costs in connection with all matters relating to collaborations under this MOU. Where possible and appropriate, the Parties may also seek funding for collaborations from Local and International research agencies.

4. General Provisions

Any specific joint projects with legally binding obligations will be set forth in separate written agreements. Treatment of intellectual property rights developed through collaborations under this MOU will be determined between the Parties through mutual consultation and separate written agreements on a case-by-case basis.

5. Confidentiality

The Parties agree that there is no intention to share any confidential or proprietary information in any collaboration under this MOU. If either Party wishes to disclose information it considers to be confidential or proprietary to the other Party, the Parties will enter into a written non-disclosure agreement.

6. Duration

This MOU shall be effective for a period of three (3) years from the date of final signature. It may be modified or extended by mutual written agreement by the Parties. This MOU may be terminated by either Party upon six (6) months advance written notice.

7. Interpretation

Any conflict arising from the implementation of this MOU shall first be negotiated by the Parties. If the conflict cannot be resolved through such negotiations, the matter shall be referred to the

Jamaican Dispute Resolution Foundation, or such other persons, body or process as the Parties may agree, for resolution.

8. Entire Understanding

This MOU constitutes the entire understanding between the Parties with respect to the programme and may not be modified except as hereinbefore provided.

IN WITNESS WHEREOF, the undersigned have signed this Memorandum of Understanding in triplicate in Kingston, Jamaica.

For and on behalf of the University of West Indies

By _____ Date: June 3, 2015

Professor Archibald McDonald
Principal

Witness by

_____ Date: June 3, 2015

For and on behalf of the Citiva Medical.

By _____ Date: _____

Mr. Josh Stanley
Director

Witness by

_____ Date: _____

Jamaican Dispute Resolution Foundation or such other person, body or process as the Parties may agree, for resolution.

8. Entire Understanding:

This MOU constitutes the entire understanding between the Parties with respect to the programme and may not be modified except as hereinbefore provided.

IN WITNESS WHEREOF, the undersigned have signed this Memorandum of Understanding in triplicate at Kingston, Jamaica.

For and on behalf of the University of West Indies

By _____ Date _____

Professor Archibald McDonald
Principal

Witness by:

_____ Date _____

For and on behalf of [illegible]

By _____ Date: June 3, 2015

Mr. Jean Stanley
Director

Witness by:

_____ Date: 6/3/15

CITIVA MEDICAL

EXECUTIVE SUMMARY ATTACHMENT 5

Citiva Medical, LLC

Charity Care Concept

A core belief of the Citiva Medical, LLC (Citiva) team is the principle that access to medical marihuana should not be hindered due to a lack of economic means, particularly for families with children in need of medical marihuana to treat their conditions and illnesses. Because of that belief, upon approval as a Registered Organization, Citiva will be prepared to work with the New York State Department of Health (NYSDOH) to implement a charity care initiative that would ideally include the following components:

- Citiva will donate a minimum of 2% of its net income to Strains of Hope, which is an IRS-registered, 501(c)(3) not-for-profit, "closed" charitable organization (meaning it will accept donations only from Citiva and will not solicit donations). This amount shall be adjusted annually based on overall patient need.
- Strains of Hope will use these funds to pay for, in part or in full, medical marihuana treatment for any illness, for individuals who cannot afford to pay for their treatment, based on a standard to be developed in concert with the NYSDOH.
- Strains of Hope will use these funds to offer **free** medical marihuana treatments to any family whose income is less than 500% of the Federal Poverty Level (which, in 2015, equates to $121,250 for a family of four), and who have a child diagnosed with intractable pediatric epilepsy. As documented elsewhere in this application, one of the founders of Citiva, Joshua Stanley, is the co-creator of Charlotte's Web, a strain of medical marihuana that has shown great efficacy in treating pediatric epilepsy.
- Finally, Strains of Hope will use these funds to ensure geographic accessibility for all certified patients who cannot readily access a dispensing site, by reimbursing patients for transportation to and from dispensing sites via Access-A-Ride or a like transportation provider.
- Strains of Hope will also work with the NYSDOH to identify other opportunities to ensure equal access to care through economic support to persons of lesser means.

Citiva looks forward to working with the NYSDOH, under Section 1004.10(b)(3), to develop an acceptable charity care program that can be implemented to enhance access for those most in need, without sacrificing the integrity and security requirements of the Medical Marihuana Demonstration Program.

CITIVA MEDICAL

EXECUTIVE SUMMARY ATTACHMENT 6

TOWN OF ROMULUS

Tom Bouchard, Chairman
William Karlsen, Vice-Chairman
Cindy Meckley, Member
Al Nivison, Member
Mary Joslyn, Member
Kate Sinicropi, Member
Sue Ellen Balluff, Member

PLANNING BOARD
1435 Prospect Street
P.O. Box 177
Willard, New York 14588
PHONE: 607-869-9326
FAX: 607-869-5763
Email: Romulus2@rochester.rr.com

June 2, 2015

John F. Caruso, PE. PMP
242 West Main Street, Suite 100
Rochester, NY 14614

Dear John,

This is to confirm that as a result of meeting with the Town of Romulus Planning Board on June 1, 2015, we were able to determine that the Citiva Medical project is an allowable use and will not require a special use permit in order to proceed.

It was a pleasure meeting with you last night. The board appreciated your willingness to discuss this important project. We extend our sincerest wishes for success for your project.

Please do not hesitate to contact us if you have any concerns, or if we can be of any further assistance.

Sincerely,

Tom Bouchard, Chairman
Planning Board

TOWN OF ROMULUS ZONING PERMIT

Date: 3 Jun 15 Permit Number 16-15

Applicant: Citiva Medical, 7378 Amboy Road, Staten Island, NY 10309

Permit to: Citiva Medical, 7378 Amboy Road, Staten Island, NY 10309

Description: New Building

At Location: 5786 State Route 96

Tax Map#: 8-1-03

Zoning District: Agricultural

Lot Size: 11.85 acres

Structure Is To Be: 15' Height, 180' Width and 500' Length

Special Conditions: Must Get A County Permit

Owner: Citiva Medical, 7378 Amboy Road, Staten Island, NY 10309

Permit Fee: $25.00 Code Enforcement Officer: _____ Date: 3 Jun 15

THE ISSUANCE OF THIS PERMIT DOES NOT RELEASE THE APPLICANT FROM THE CONDITIONS OF ANY APPLICABLE BUILDING OR HEALTH CODE RESTRICTIONS.

Town of Gates

1605 Buffalo Road
Rochester, New York 14624
585-247-6100

Supervisor
Mark W. Assini

Town Council

Frank X. Allkofer
Lee A. Cordero
Christopher B. DiPonzio
Richard A. Warner

5/20/15
New York State Department of Health
Bureau of Narcotics Enforcement
Medical Marijuana Program
150 Broadway
Albany, New York 12204

New York State approved the use of medical marijuana by passing the Compassionate Care Act in 2014. Patients that suffer from terminal illnesses like Cancer, Huntington's and ALS as well as debilitating diseases like Epilepsy and MS will find relief through this newly authorized medication. This medication is not smoked and can't be consumed in a public place. This is truly a therapeutic drug.

[redacted] Families deserve this medical option for their loved ones.

Therefore, I urge you to grant Citiva Medical a license to dispense medical marijuana in New York State. Citiva's plan to open a dispensary in our town in a properly zoned retail location will be another resource that qualifying patients can utilize in our area to get the relief they need from some of mankinds most horrific diseases. Citiva's unparalleled security plan to move and sell their medicine make me believe Citiva and the residents of Gates will have a long and fruitful partnership.

Sincerely,

Mark W. Assini

Mark W. Assini

Gates Town Supervisor

Town Council
Bill Meyer, Deputy Supervisor
Vern Conway
Mike Becallo
Mark Venesky
Dick Cushman

Town Clerk
Tracy M. Cosilmon
(315) 699-8109

Supervisor
Jessica Zambrano
(315) 699-1414

Highway Superintendent
Christopher J. Woznica
(315) 699-2745
Fax (315) 699-2746

Receiver of Taxes
Sharon M. Edick
(315) 699-2756
Fax (315) 699-9562

TOWN OF CICERO

COUNTY OF ONONDAGA
8236 Brewerton Road, Cicero, New York 13039 • FAX 315-699-0039 • e-mail: jzambrano@ciceronewyork.net

May 29, 2015

To whom it may concern:

Citiva Medical has put together an application to start a project that includes the cultivation, manufacture, distribution and sale of medical marijuana. While the cultivation and manufacturing functions will be located in other sites, Citiva has selected Cicero as a dispensing center.

We are pleased to support this new industry endeavor, primarily because of the therapeutic benefits a medical marijuana program will provide to those patients in need. We are also excited to be part of this new start-up industry that will, no doubt, set the standard across the county.

The Cicero pharmacy site that Citiva has selected is an ideal location because it is very close to an Interstate-81 exit, making it easily accessible to patients from across our Central New York area. The building has ample space and parking for patients and employees. Additionally, the site is close to numerous retail shops and food establishments for convenience.

The Citiva leadership anticipates employing approximately 20 professional and security personnel, so we are pleased with this job growth opportunity for our Town.

Given all the positive outcomes of this endeavor for patients in need and for our Town, I would like to add our full support for the project. Please feel free to contact me should you have any questions: (315) 699-1414 or jzambrano@ciceronewyork.net.

Sincerely,

Jessica Zambrano

Jessica Zambrano
Cicero Town Supervisor

Youth Bureau
Parks and Recreation
(315) 699-5233

Comptroller
(315) 699-2759

Assessor
(315) 699-1410
Fax (315) 699-2758

Zoning and Planning
(315) 699-2201
Fax (315) 699-2265

Town of Poughkeepsie
Office of Municipal Development

1 Overocker Road
Poughkeepsie, NY 12603

845-485-3657 Phone
845-486-7885/790-4772 Fax

June 4, 2015

VIA E-MAIL

Dr. Howard Zucker, Commissioner
New York State Department of Health
Corning Tower
Empire State Plaza
Albany, New York 12237

Re: Citivia Medical Proposed Lease Site
2290 South Road, Town of Poughkeepsie

Dear Commissioner Zucker:

In regard to Citivia Medical's proposed lease of a ±2,150 square foot space at 2290 South Road, Tax Parcel No. 6159-01-211992, in the Town of Poughkeepsie, please be advised that the property is zoned Highway Business (B-H) District, which permits retail uses. Accordingly, use of the site for a retail medical dispensary is permitted under Chapter 210 of the Town of Poughkeepsie Code.

Please contact me with any questions.

Very Truly Yours:

Neil A. Wilson
Director of Municipal Development

NAW:me

Hon. Todd Tancredi, Supervisor, via email
Hon. Joseph Lepore, Councilman, via email
Sarah Davis, Zoning Administrator, via email
Frank M. Cicero, via email
Patrick H. McCarthy via email
Ron Hicks, via email

SENECA COUNTY
CHAMBER of COMMERCE

June 2, 2015

New York State Department of Health
Bureau of Narcotic Enforcement
Medical Marijuana Program
150 Broadway
Albany, NY 12204

To Whom It May Concern:

On behalf of more than 550 member businesses and trusted partners of the Seneca County Chamber of Commerce (the Chamber), I am pleased to express our full support for Citiva Medical in regards to their application for a medical marijuana license and their corresponding investment in the Town of Romulus, NY.

The Chamber is one of the Finger Lakes region's largest and most influential business organizations. As the leading voice of business in the greater Seneca County area for more than 40 years, the Chamber facilitates interaction between our membership, government, the general public and those looking to do business in our community. We have excelled in four core areas: Tourism/Economic Development, Public Policy and Advocacy, Health Insurance and Stakeholder Education. We are proud to take an active role in the economic growth of our community.

To that end, the Chamber has closely followed the effort to bring medical marijuana to New York State. We believe the initiative has great potential to provide relief for thousands of patients suffering from serious illnesses throughout the Finger Lakes region as well as the ability to help transform our community into a respected, leader of innovation and research.

Furthermore, the Chamber applauds the New York State Department of Health for its comprehensive approach to implementing a safe, effective and accessible medical marijuana program for all New Yorkers – particularly upstate.

We urge your consideration of Citiva Medical as one of the five licensed organizations to manufacture and dispense medical marijuana in New York State. Their record of achievement and corporate philosophy closely aligns with our mutual goals for the future success of this program.

Sincerely yours,

Mark Benjamin
Chairman of the Board
Seneca County Chamber of Commerce

2020 US Route 20 | Seneca Falls, NY 13148 | p. (315) 568-2906 | f. (315) 568-1730 | tf. (800) 732-1848
www.senecachamber.org | info@senecachamber.org

COUNTY OF DUTCHESS

MARCUS J. MOLINARO
COUNTY EXECUTIVE

June 3, 2015

Dr. Howard Zucker
Commissioner
New York State Department of Health
Corning Tower
Empire State Plaza
Albany, NY 12237

Dear Dr. Zucker:

Ensuring our residents have access to the finest health care options available has always been one of my top priorities, which is why I have closely followed efforts in Albany to expand the pharmaceutical industry in New York to manufacture and dispense medication derived from cannabinoids under the state's Compassionate Care Act.

The Act provides for the initial licensing of up to five organizations in New York State and allows the Commissioner to license additional organizations in the future. As with the manufacture and distribution all controlled substances, it is critically important that each license is granted only to entities that take a pharmaceutical approach to their production and distribution, and that each entity maintain the highest level of quality and security.

My office has met with representatives from Citiva Medical, and after careful consideration and review, I believe they represent the highest level of quality, security, and expertise necessary to secure a license that would authorize them to manufacture and dispense pharmaceuticals authorized under the Compassionate Care Act in New York State.

Sincerely,

Marcus J. Molinaro
Dutchess County Executive

22 Market Street, Poughkeepsie New York 12601 • (845) 486-2000 • Fax (845) 486-2021
www.dutchessny.gov

SULLIVAN COUNTY
PARTNERSHIP
FOR ECONOMIC DEVELOPMENT

June 3, 2015

To Whom it May Concern:

The Partnership for Economic Development in Sullivan has been advocating for business attraction and expansion for the past 20 years. We are the premier economic development agency growing the economy of Sullivan County. Our board is made up of distinguished leaders from various industries which meet regularly to share ideas and information and tactical strategies with common goal of making Sullivan County a business friendly community and fostering a healthy business climate within which our business can prosper..

The Partnership advocates and facilitates for its member businesses and for prospective business seeking to invest and create meaningful jobs in Sullivan County. We have been closely monitoring the passage of New York's Compassionate Care Act. Subsequently, we have developed a keen interest in who the state will choose as the five Registered Organizations to operate a medical marijuana program.

Medical marijuana, as the State of New York has constituted, has the potential to provide relief for thousands of patients suffering from serious illnesses in Sullivan County. Beyond that, medical cannabis is one of the fastest growing industries in the country, and that presents an interesting opportunity for our community.

We expect that any company seeking to enter this industry in our area must be held to the highest standards, and comply with the regulatory directives that New York State has crafted as a foundation of its award procedures. Our support for a specific application is contingent upon a commitment to quality and most importantly, security.

Citiva Medical has the experience needed in order to provide the highest level of service to Sullivan County residents. Their company, led by nationally renowned medical cannabis pioneer Josh Stanley, has a game-changing philosophy of delivering pharmaceutical quality medicine.

Citiva Medical's partnership with The Center for Discovery is a clear indication of their dedication to the intent of the New York State license and to our area. The Center for Discovery is Sullivan County's largest employer and one of the largest providers in New York State's Children's Residential program. This is an exciting partnership that is contingent upon Citiva Medical being awarded Registered Organization status by the state.

The Partnership for Economic Development supports Citiva Medical's application to secure a medical marijuana license in New York State.

Respectfully submitted,

Marc A. Baez
President/CEO

Jacob Billig
Chairman of the Board

198 Bridgeville Road, Monticello, New York 12701, 845-794-1110 (p), 845-794-2324 (f)
www.scpartnership.com

To Whom It May Concern

As a [redacted], I have been in the medical field for over 20 years. I have worked with the sickest and most frail children in Western New York in the Pediatric Intensive Care Unit and Pediatric Craniofacial Plastic Surgery. Watching their families sit helplessly praying for other options to save their child left a lasting impact on me both professionally and personally. I have made it my role and responsibility to provide compassion to all those I have had the privilege to care for.

[redacted] As these are the foundational building blocks of any an organization that provides food, ingredients and/or medicines.

We believe in research and evidence based medicine but we also believe in providing suffering patients with lifesaving quality medicine that has little to no negative side effects. [redacted] pharmaceutical options are limited and carry hefty side effects, including aplastic anemia (potentially fatal blood cancer) and blindness. [redacted] we need other options in New York State and therefore we became advocates for the legalization of medical marijuana. During this time we have had the opportunity to see medical marijuana programs in other states firsthand and realize that New York State can do better.

[redacted] We believe that Citiva Medical, is the company to provide [redacted] the medicine they so desperately need. In meeting with Citiva Medical, it is clear that their focus on quality, standardization of the medicines and supply risk management puts them at the forefront of the NYS industry. We look forward to working with Citiva Medical [redacted] and many others in New York State.

Sincerely,

Christine and Tim Emerson

[redacted]

Wendy Conte
[redacted]
May 27, 2015

To Whom It May Concern:

Please accept this letter of referral for Citiva Medical as a candidate for the New York State Compassionate Care Act implementation. My [redacted] and I are intimately aware of the importance of this next step in the Compassionate Care Act. I am the [redacted] I was involved early on in the research on the promising use of high cannabinoid medicine on children [redacted] and the eventual passing of the Bill. In my research and travels, I witnessed quite a bit in terms of how other states went about similar legislation. It is imperative that the chosen team fully understand and have experience in how to do this with quality and integrity.

As an educated parent, I was interested in a medically focused, highly regulated legislation of which we could be proud and which would save lives. From the beginning, our goal was for patients to benefit from the best possible standardized medication. I've met with Josh Stanley numerous times and have witnessed the passion and dedication of his team on providing high quality and strictly-controlled medication to those in need. [redacted], I have always wanted medicine [redacted], but fully understood from the beginning that this must be done with quality, ethics, safety and high standards. I have the utmost respect and confidence in the Citiva team. From the beginning we wanted New York to stand out and wanted our hard work in the passing of the Bill to end in a high-quality, ethical implementation that is fair to all and up to the standards New Yorkers deserve. Josh Stanley and the Citiva team are well-positioned in their dedication, knowledge, passion and experience to make this happen.

As you can imagine, it is bittersweet that [redacted] will not benefit from our hard work. Frankly, it would be easy for me to [redacted] and leave this task to others. I want to make it clear that the reason I cannot do that is because of the Citiva team and what I have seen in Josh Stanley. This next stage of implementation cannot be put in better hands. It is without reservation that I recommend they are chosen to fulfill this most important role. If you want to hear more about why I feel such confidence in Citiva and Mr. Stanley, feel free to contact me at any time. I would relish the opportunity to further discuss my confidence in Citiva.

Sincerely,

Wendy Conte
[redacted]

TABLE OF CONTENTS

Application Form

Attachment A – Real Property/Buildings/Facilities and Municipality Letters of Support

Attachment B – Equipment List

Attachment C – Proof of Bond Posting and Documentation of Right to Use Land, Buildings, Premises, Equipment

Attachment D – Operating Plan

- Section 1 – Manufacturing
- Section 2 – Transport and Distribution
- Section 3 – Dispensing and Sale
- Section 4 - Devices
- Section 5 – Securing and Control
- Section 6 – Standard Operating Procedure
- Section 7 – Quality Assurance Plans
- Section 8 – Returns, Complaints, Adverse Events and Recalls
- Section 9 – Product Quality Assurance
- Section 10 - Recordkeeping

Attachment E – Organizational and Operational Documents

Attachment F – Labor Peace Agreement

Attachment G – Financial Statement – Business Transactions

Attachment H – Security Plan

Attachment I – Financial Documents

Attachment J – Staffing Plan

Attachment K – Documentation of Internet Connectivity

Attachment L – Project Timeline

Attachment M – Compliance with Laws and Regulations (Letter) and Additional Supporting Documents

Appendix A – Affidavit for Board Members, Officers, Managers, Owners, Partners, Principal Stakeholders, Directors and Members

Appendix B – Architectural Program

NEW YORK STATE | Department of Health

Medical Marijuana Program
Application for Registration as a Registered Organization

Section A: Business Entity Information

1. Business Name: Citiva Medical LLC

2. Organization Type (choose one):
- [x] For-profit
- [ ] Non-profit

3. Business Type (choose one):
- [ ] Corporation
- [x] Limited Liability Company
- [ ] Sole Proprietorship
- [ ] General Partnership
- [ ] Limited Partnership
- [ ] Other:

4. Phone: 917-807-5028	5. Fax:	6. Email: fturano@citivamedical.com

7. Business Address: 7378 South Amboy Road

8. City: Staten Island	9. State: New York	10. ZIP Code: 10307

11. Mailing Address (if different than Business Address): (same as above)

12. City:	13. State:	14. ZIP Code:

Section B: Primary Contact Information

15. Name: Frank M. Cicero		16. Title: Consultant
17. Phone: 914-682-8657	18. Fax: 914-682-8895	19. Email: frank@ciceroassociates.com

20. Mailing Address: Cicero Consulting Associates, 701 Westchester Avenue, Suite 210W

21. City: White Plains	22. State: New York	23. ZIP Code: 10604

Section C: Proposed Manufacturing Facility Information

24. Proposed Facility Name: Citiva Medical LLC - Manufacturing Facility #1 - Romulus

25. Proposed Facility Address: 5786 State Route 96

26. City: Romulus	27. State: NY	28. ZIP Code: 14541

29. County: Seneca

30. Property Status (choose one):
- [ ] Owned by the applicant
- [x] Leased by the applicant
- [ ] Other:

If you checked "Other" above, describe the property status in the field provided.

31. Proposed Hours of Operation:

Monday:	7:00am to 11:00pm	Friday:	7:00am to 11:00pm
Tuesday:	7:00am to 11:00pm	Saturday:	7:00am to 11:00pm
Wednesday:	7:00am to 11:00pm	Sunday:	7:00am to 11:00pm
Thursday:	7:00am to 11:00pm		

An additional entry is included below for applicants who are proposing to use more than one manufacturing facility (responsible for cultivation, harvesting, extraction or other processing, packaging and labeling).

32. Proposed Facility Name: N/A		
33. Proposed Facility Address:		
34. City:	35. State: **NY**	36. ZIP Code:
37. County:	38. Property Status (choose one): ☐ Owned by the applicant ☐ Leased by the applicant ☐ Other: **If you checked "Other" above, describe the property status in the field provided.**	

39. Proposed Hours of Operation:

Monday:	to	Friday:	to
Tuesday:	to	Saturday:	to
Wednesday:	to	Sunday:	to
Thursday:	to		

Section D: Proposed Dispensing Facility #1 Information

40. Proposed Facility Name: Citiva Medical LLC - Dispensing Facility #1 - Rochester		
41. Proposed Facility Address: 4 Hinchey Road		
42. City: Rochester	43. State: **NY**	44. ZIP Code: 14624
45. County: Monroe	46. Property Status (choose one): ☐ Owned by the applicant ☑ Leased by the applicant ☐ Other: **If you checked "Other" above, describe the property status in the field provided.**	

47. Proposed Hours of Operation:

Monday:	9:00am to 7:00pm	Friday:	9:00am to 7:00pm
Tuesday:	9:00am to 7:00pm	Saturday:	10:00am to 5:00pm
Wednesday:	9:00am to 7:00pm	Sunday:	10:00am to 4:00pm
Thursday:	9:00am to 7:00pm		

Section E: Proposed Dispensing Facility #2 Information

48. Proposed Facility Name: Citiva Medical LLC - Dispensing Facility #2 - Syracuse		
49. Proposed Facility Address: 5788 East Circle Drive		
50. City: Cicero	51. State: **NY**	52. ZIP Code: 13039
53. County: Onondaga	54. Property Status (choose one): ☐ Owned by the applicant ☑ Leased by the applicant ☐ Other: **If you checked "Other" above, describe the property status in the field provided.**	

55. Proposed Hours of Operation:

Monday:	9:00am to 7:00pm	Friday:	9:00am to 7:00pm
Tuesday:	9:00am to 7:00pm	Saturday:	10:00am to 5:00pm
Wednesday:	9:00am to 7:00pm	Sunday:	10:00am to 4:00pm
Thursday:	9:00am to 7:00pm		

Section F: Proposed Dispensing Facility #3 Information

56. Proposed Facility Name: Citiva Medical LLC - Dispensing Facility #3 - Hudson Valley

57. Proposed Facility Address: 2290 South Road

58. City: Poughkeepsie	59. State: **NY**	60. ZIP Code: 12601

61. County: Dutchess

62. Property Status (choose one):
- ☐ Owned by the applicant
- ☑ Leased by the applicant
- ☐ Other:

If you checked "Other" above, describe the property status in the field provided.

63. Proposed Hours of Operation:

Monday:	9:00am to 7:00pm	Friday:	9:00am to 7:00pm
Tuesday:	9:00am to 7:00pm	Saturday:	10:00am to 5:00pm
Wednesday:	9:00am to 7:00pm	Sunday:	10:00am to 4:00pm
Thursday:	9:00am to 7:00pm		

Section G: Proposed Dispensing Facility #4 Information

64. Proposed Facility Name: Citiva Medical LLC - Dispensing Facility #4 - Manhattan

65. Proposed Facility Address: 35 1st Avenue

66. City: New York	67. State: **NY**	68. ZIP Code: 10003

69. County: New York

70. Property Status (choose one):
- ☐ Owned by the applicant
- ☑ Leased by the applicant
- ☐ Other:

If you checked "Other" above, describe the property status in the field provided.

71. Proposed Hours of Operation:

Monday:	9:00am to 7:00pm	Friday:	9:00am to 7:00pm
Tuesday:	9:00am to 7:00pm	Saturday:	10:00am to 5:00pm
Wednesday:	9:00am to 7:00pm	Sunday:	10:00am to 4:00pm
Thursday:	9:00am to 7:00pm		

Section H: Legal Disclosures

72. Has the applicant, any controlling person of the applicant, any manager, any principal stakeholder, any sole proprietor applicant, any general partner of a partnership applicant, any officer or member of the board of directors of a corporate applicant, or corporate general partner had a prior discharge in bankruptcy or been found insolvent in any court action? ☐ **Yes** ☑ **No**

If the answer to this question is "Yes," a statement providing details of such bankruptcy or insolvency must be included with this application.

73. Does any controlling person of the applicant, any manager, any principal stakeholder, any sole proprietor applicant, any general partner of a partnership applicant, any officer or member of the board of directors of a corporate applicant, or corporate general partner, or a combination of such persons collectively, maintain a ten percent interest or greater in any firm, association, foundation, trust, partnership, corporation or other entity, and such entity will or may provide goods, leases, or services to the registered organization, the value of which is or would be five hundred dollars or more within any one year?

OR

Does any entity maintain a ten percent interest or greater in the applicant, and such entity will or may provide goods, leases, or services to the registered organization, the value of which is or would be five hundred dollars or more within any one year?

☐ **Yes** ☑ **No**

If the answer to either of these questions is "Yes," a statement with the name and address of the entity together with a description of the goods, leases, or services and the probable or anticipated cost to the registered organization, must be included with this application.

74.

A. Is the applicant a corporate subsidiary or affiliate of another corporation? ☑ **Yes** ☐ **No**

If the answer to this question is "Yes," a statement setting forth the name and address of the parent or affiliate, the primary activities of the parent or affiliate, the interest in the applicant held by the parent or affiliate, and the extent to which the parent will be involved in the activities of the applicant, and responsible for the financial and contractual obligations of the subsidiary must be included with this application. The organizational and operational documents of the corporate subsidiary or affiliate must also be submitted, including but not limited to, as applicable: the certificate of incorporation, bylaws, articles of organization, partnership agreement, operating agreement, and all amendments thereto, and other applicable documents and agreements including in relation to the subsidiary or affiliate's financial or contractual obligations with respect to the applicant.

PLEASE REFER TO ATTACHMENT E

B. Is any owner, partner or member of the applicant not a natural person? ☑ **Yes** ☐ **No**

If the answer to this question is "Yes," a statement must be included with this application setting forth the name and address of the entity, the primary activities of the entity, the interest in the applicant held by the entity, and the extent to which the entity will be involved in the activities of the applicant, and responsible for the financial and contractual obligations of the applicant. The organizational and operational documents of the entity must also be submitted, including but not limited to, as applicable: the certificate of incorporation, bylaws, articles of organization, partnership agreement, operating agreement, and all amendments thereto, and other applicable documents and agreements including in relation to the entity's financial or contractual obligations with respect to the applicant, and the identification of all those holding an interest or ownership in the entity and the percentage of interest or ownership held in the entity. If an interest or ownership in the entity is not held by a natural person, the information and documentation requested herein must be provided going back to the level of ownership by a natural person (Principal Stakeholder).

PLEASE REFER TO ATTACHMENT E

75. Has construction, lease, rental, or purchase of the manufacturing facility been completed? ☐ Yes ☑ No

The applicant is providing a letter of intent and a draft lease under Attachment C.

If the answer to this question is "No," a statement indicating the anticipated source and application of the funds to be used in such purchase, lease, rental or construction, as well as anticipated date that construction, lease, rental or purchase will be completed must be included with this application.

76. Has construction, lease, rental, or purchase of the dispensing facilities been completed? ☐ Yes ☑ No

The applicant is submitting an executed lease for its Poughkeepsie dispensing site and letters of intent and draft leases for its other three (3) dispensing sites under Attachment C.

If the answer to this question is "No," a statement indicating the anticipated source and application of the funds to be used in such purchase, lease, rental or construction, as well as anticipated date that construction, lease, rental or purchase will be completed must be included with this application.

Section I: Required Attachments

Applications received without the required attachments will not be eligible for consideration until the required attachments are received. All such attachments must be postmarked by the Deadline for Submission of Applications.

77. ☑ The applicant has enclosed a non-refundable application fee in the amount of $10,000.

Applications received without the $10,000 application fee will not be considered.

78. ☑ The applicant has enclosed a conditionally refundable registration fee in the amount of $200,000.

Applications received without the $200,000 registration fee will not be considered.

The $200,000 registration fee will be refunded to applicants that are not selected as registered organizations.

79. ☑ The applicant has attached all required statements from Section H: Legal Disclosures, if applicable.

80. ☑ The applicant has attached identification of all real property, buildings, and facilities that will be used in manufacturing and dispensing activities, pursuant to PHL § 3365 and 10 NYCRR § 1004.5(b)(2), and labeled this attachment as "**Attachment A.**"

81. ☑ The applicant has attached identification of all equipment that will be used to carry out the manufacturing, processing, transportation, distributing, sale, and dispensing activities described in the application and operating plan, pursuant to PHL § 3365 and 10 NYCRR § 1004.5(b)(3), and labeled this attachment as "**Attachment B.**"

82. ☑ The applicant has attached copies of all applicable executed and proposed deeds, leases, and rental agreements or executed option contracts related to the organization's real property interests, showing that the applicant possesses or has the right to use sufficient land, buildings, other premises, and equipment, and contains the language required in 10 NYCRR § 1004.5(b)(9), if applicable, or, in the alternative, the applicant attached proof that it has posted a bond of not less than $2,000,000, pursuant to PHL § 3365 and 10 NYCRR § 1004.5(b)(9), and labeled this attachment as "**Attachment C.**"

83. ☑ The applicant has attached an operating plan that includes a detailed description of the applicant's manufacturing processes, transporting, distributing, sale and dispensing policies or procedures, and contains the components set forth in 10 NYCRR § 1004.5(b)(4), and labeled the operating plan as **"Attachment D – Operating Plan"** with the information clearly labeled and divided into the following sections:

Section 1 - Manufacturing (§ 1004.5(b)(4))
Section 2 - Transport and Distribution (§ 1004.5(b)(4))
Section 3 - Dispensing and Sale (§ 1004.5(b)(4))
Section 4 - Devices (§ 1004.5(b)(4)(i))
Section 5 - Security and Control (§ 1004.5(b)(4)(ii))
Section 6 - Standard Operating Procedure (§ 1004.5(b)(4)(iii))
Section 7 - Quality Assurance Plans (§ 1004.5(b)(4)(iv))
Section 8 - Returns, Complaints, Adverse Events and Recalls (§ 1004.5(b)(4)(v))
Section 9 - Product Quality Assurance (§ 1004.5(b)(4)(vi))
Section 10- Recordkeeping (§ 1004.5(b)(4)(vii))

84. ☑ The applicant has attached copies of the organizational and operational documents of the applicant, pursuant 10 NYCRR § 1004.5(b)(5), which must include the identification of all those holding an interest or ownership in the applicant and the percentage of interest or ownership held, and labeled this attachment as **"Attachment E."**

85. ☑ **"Appendix A: Affidavit for Board Members, Officers, Managers, Owners, Partners, Principal Stakeholders, Directors, and Members"** has been completed for each of the board members, officers, managers, owners, partners, principal stakeholders, directors, and any person or entity that is a member of the applicant setting forth the information required in PHL § 3365(1)(a)(iv) and 10 NYCRR § 1004.5(b)(6).

86. ☑ The applicant has attached documentation that the applicant has entered into a labor peace agreement with a bona fide labor organization that is actively engaged in representing or attempting to represent the applicant's employees, pursuant to PHL § 3365(1)(a)(iii) and 10 NYCRR § 1004.5(b)(7), and labeled this attachment as **"Attachment F."**

87. ☑ The applicant has attached a financial statement setting forth all elements and details of any business transactions connected with the application, including but not limited to all agreements and contracts for consultation and/or arranging for the assistance in preparing the application, pursuant to 10 NYCRR § 1004.5(b)(10), and labeled this attachment as **"Attachment G."**

88. ☑ The applicant has completed **"Appendix B – Architectural Program"** and included the components set forth in 10 NYCRR § 1004.5(b)(11) and -(12).

89. ☑ The applicant has attached the security plan of the applicant's proposed manufacturing and dispensing facilities indicating how the applicant will comply with the requirements of Article 33 of the Public Health Law, 10 NYCRR Part 1004, and any other applicable state or local law, rule, or regulation, and labeled this attachment as **"Attachment H."**

90. ☑ The applicant has attached the most recent financial statement of the applicant prepared in accordance with generally accepted accounting principles (GAAP) applied on a consistent basis and certified by an independent certified public accountant, in accordance with the requirements of 10 NYCRR § 1004.5(b)(16), and labeled this attachment as **"Attachment I."**

91. ☑ The applicant has attached a staffing plan for staff to be involved in activities related to the cultivation of marijuana, the manufacturing and/or dispensing of approved medical marijuana products, and/or staff with oversight responsibilities for such activities that includes the requirements set forth in 10 NYCRR § 1004.5(b)(18) of the regulations and labeled this attachment as **"Attachment J."**

92. ☑ The applicant has attached proof from the local internet service provider(s) that all of the applicant's manufacturing and dispensing facilities are located in an area with internet connectivity and labeled this attachment as **"Attachment K."** Internet connectivity will be required to support the use of a Seed-to-Sale Solution approved by the Department to record the registered organization's permitted activities.

93. ☑ The applicant has attached a timeline demonstrating the estimated timeframe from growing marijuana to production of a final approved product, and labeled this attachment as **"Attachment L."**

94. ☑ The applicant has attached a statement and/or documentation showing that the applicant is able to comply with all applicable state and local laws and regulations relating to the activities in which it intends to engage under the registration, pursuant to 10 NYCRR § 1004.5(b)(8), and labeled this attachment as **"Attachment M."**

Section J: Attestation and Signature

As the chief executive officer duly authorized by the board of a corporate applicant, or a general partner or owner of a proprietary applicant, I hereby authorize the release of any and all applicant information of a confidential or privileged nature to the Department and its agents. If granted a registration, I hereby agree to ensure the registered organization uses the Seed-to-Sale Solution approved by the Department to record the registered organization's permitted activities. I hereby certify that the information provided in this application, including in any statement or attachments submitted herewith, is truthful and accurate. I understand that any material omissions, material errors, false statements, misrepresentations, or failure to provide any requested information may result in the denial of the application or other action as may be allowed by law.

95. Signature: ▶ [signature]

96. Date Signed: 5/29/2015

97. Print Name: Joshua Stanley

The application must include a handwritten signature by the chief executive officer duly authorized by the board of a corporate applicant, or a general partner or owner of a proprietary applicant, and must be notarized.

Notary Name: Johnny Ngai	Notary Registration Number: 01NG6262875
Notary (Notary Must Affix Stamp or Seal)	Date: 5/29/15

JOHNNY NGAI
Notary Public - State of New York
NO. 01NG6262875
Qualified in New York County
My Commission Expires 6/4/16

NEW YORK STATE | Department of Health

Medical Marijuana Program
Application for Registration as a Registered Organization

Section A: Business Entity Information

1. Business Name: Citiva Medical LLC

2. Organization Type (choose one):
- [x] For-profit
- [ ] Non-profit

3. Business Type (choose one):
- [ ] Corporation
- [x] Limited Liability Company
- [ ] Sole Proprietorship
- [ ] General Partnership
- [ ] Limited Partnership
- [ ] Other:

4. Phone: 917-807-5028	5. Fax:	6. Email: fturano@citivamedical.com

7. Business Address: 7378 South Amboy Road

8. City: Staten Island	9. State: New York	10. ZIP Code: 10307

11. Mailing Address (if different than Business Address): (same as above)

12. City:	13. State:	14. ZIP Code:

Section B: Primary Contact Information

15. Name: Frank M. Cicero		16. Title: Consultant
17. Phone: 914-682-8657	18. Fax: 914-682-8895	19. Email: frank@ciceroassociates.com

20. Mailing Address: Cicero Consulting Associates, 701 Westchester Avenue, Suite 210W

21. City: White Plains	22. State: New York	23. ZIP Code: 10604

Section C: Proposed Manufacturing Facility Information

24. Proposed Facility Name: Citiva Medical LLC - Manufacturing Facility #1 - Romulus

25. Proposed Facility Address: 5786 State Route 96

26. City: Romulus	27. State: NY	28. ZIP Code: 14541

29. County: Seneca

30. Property Status (choose one):
- [ ] Owned by the applicant
- [x] Leased by the applicant
- [ ] Other:

If you checked "Other" above, describe the property status in the field provided.

31. Proposed Hours of Operation:

Monday:	7:00am to 11:00pm	Friday:	7:00am to 11:00pm
Tuesday:	7:00am to 11:00pm	Saturday:	7:00am to 11:00pm
Wednesday:	7:00am to 11:00pm	Sunday:	7:00am to 11:00pm
Thursday:	7:00am to 11:00pm		

An additional entry is included below for applicants who are proposing to use more than one manufacturing facility (responsible for cultivation, harvesting, extraction or other processing, packaging and labeling).

32. Proposed Facility Name: N/A		
33. Proposed Facility Address:		
34. City:	35. State: **NY**	36. ZIP Code:
37. County:	38. Property Status (choose one): ☐ Owned by the applicant ☐ Leased by the applicant ☐ Other: **If you checked "Other" above, describe the property status in the field provided.**	

39. Proposed Hours of Operation:

Monday:	to	Friday:	to
Tuesday:	to	Saturday:	to
Wednesday:	to	Sunday:	to
Thursday:	to		

Section D: Proposed Dispensing Facility #1 Information

40. Proposed Facility Name: Citiva Medical LLC - Dispensing Facility #1 - Rochester		
41. Proposed Facility Address: 4 Hinchey Road		
42. City: Rochester	43. State: **NY**	44. ZIP Code: 14624
45. County: Monroe	46. Property Status (choose one): ☐ Owned by the applicant ☑ Leased by the applicant ☐ Other: **If you checked "Other" above, describe the property status in the field provided.**	

47. Proposed Hours of Operation:

Monday:	9:00am to 7:00pm	Friday:	9:00am to 7:00pm
Tuesday:	9:00am to 7:00pm	Saturday:	10:00am to 5:00pm
Wednesday:	9:00am to 7:00pm	Sunday:	10:00am to 4:00pm
Thursday:	9:00am to 7:00pm		

Section E: Proposed Dispensing Facility #2 Information

48. Proposed Facility Name: Citiva Medical LLC - Dispensing Facility #2 - Syracuse		
49. Proposed Facility Address: 5788 East Circle Drive		
50. City: Cicero	51. State: **NY**	52. ZIP Code: 13039
53. County: Onondaga	54. Property Status (choose one): ☐ Owned by the applicant ☑ Leased by the applicant ☐ Other: **If you checked "Other" above, describe the property status in the field provided.**	

55. Proposed Hours of Operation:

Monday:	9:00am to 7:00pm	Friday:	9:00am to 7:00pm
Tuesday:	9:00am to 7:00pm	Saturday:	10:00am to 5:00pm
Wednesday:	9:00am to 7:00pm	Sunday:	10:00am to 4:00pm
Thursday:	9:00am to 7:00pm		

Section F: Proposed Dispensing Facility #3 Information

56. Proposed Facility Name: Citiva Medical LLC - Dispensing Facility #3 - Hudson Valley

57. Proposed Facility Address: 2290 South Road

58. City: Poughkeepsie	59. State: **NY**	60. ZIP Code: 12601

61. County: Dutchess

62. Property Status (choose one):
- ☐ Owned by the applicant
- ☑ Leased by the applicant
- ☐ Other:

If you checked "Other" above, describe the property status in the field provided.

63. Proposed Hours of Operation:

Monday:	9:00am to 7:00pm	Friday:	9:00am to 7:00pm
Tuesday:	9:00am to 7:00pm	Saturday:	10:00am to 5:00pm
Wednesday:	9:00am to 7:00pm	Sunday:	10:00am to 4:00pm
Thursday:	9:00am to 7:00pm		

Section G: Proposed Dispensing Facility #4 Information

64. Proposed Facility Name: Citiva Medical LLC - Dispensing Facility #4 - Manhattan

65. Proposed Facility Address: 35 1st Avenue

66. City: New York	67. State: **NY**	68. ZIP Code: 10003

69. County: New York

70. Property Status (choose one):
- ☐ Owned by the applicant
- ☑ Leased by the applicant
- ☐ Other:

If you checked "Other" above, describe the property status in the field provided.

71. Proposed Hours of Operation:

Monday:	9:00am to 7:00pm	Friday:	9:00am to 7:00pm
Tuesday:	9:00am to 7:00pm	Saturday:	10:00am to 5:00pm
Wednesday:	9:00am to 7:00pm	Sunday:	10:00am to 4:00pm
Thursday:	9:00am to 7:00pm		

Section H: Legal Disclosures

72. Has the applicant, any controlling person of the applicant, any manager, any principal stakeholder, any sole proprietor applicant, any general partner of a partnership applicant, any officer or member of the board of directors of a corporate applicant, or corporate general partner had a prior discharge in bankruptcy or been found insolvent in any court action? ☐ Yes ☑ No

If the answer to this question is "Yes," a statement providing details of such bankruptcy or insolvency must be included with this application.

73. Does any controlling person of the applicant, any manager, any principal stakeholder, any sole proprietor applicant, any general partner of a partnership applicant, any officer or member of the board of directors of a corporate applicant, or corporate general partner, or a combination of such persons collectively, maintain a ten percent interest or greater in any firm, association, foundation, trust, partnership, corporation or other entity, and such entity will or may provide goods, leases, or services to the registered organization, the value of which is or would be five hundred dollars or more within any one year?

OR

Does any entity maintain a ten percent interest or greater in the applicant, and such entity will or may provide goods, leases, or services to the registered organization, the value of which is or would be five hundred dollars or more within any one year?

☐ Yes ☑ No

If the answer to either of these questions is "Yes," a statement with the name and address of the entity together with a description of the goods, leases, or services and the probable or anticipated cost to the registered organization, must be included with this application.

74.

A. Is the applicant a corporate subsidiary or affiliate of another corporation? ☑ Yes ☐ No

If the answer to this question is "Yes," a statement setting forth the name and address of the parent or affiliate, the primary activities of the parent or affiliate, the interest in the applicant held by the parent or affiliate, and the extent to which the parent will be involved in the activities of the applicant, and responsible for the financial and contractual obligations of the subsidiary must be included with this application. The organizational and operational documents of the corporate subsidiary or affiliate must also be submitted, including but not limited to, as applicable: the certificate of incorporation, bylaws, articles of organization, partnership agreement, operating agreement, and all amendments thereto, and other applicable documents and agreements including in relation to the subsidiary or affiliate's financial or contractual obligations with respect to the applicant.

PLEASE REFER TO ATTACHMENT E

B. Is any owner, partner or member of the applicant not a natural person? ☑ Yes ☐ No

If the answer to this question is "Yes," a statement must be included with this application setting forth the name and address of the entity, the primary activities of the entity, the interest in the applicant held by the entity, and the extent to which the entity will be involved in the activities of the applicant, and responsible for the financial and contractual obligations of the applicant. The organizational and operational documents of the entity must also be submitted, including but not limited to, as applicable: the certificate of incorporation, bylaws, articles of organization, partnership agreement, operating agreement, and all amendments thereto, and other applicable documents and agreements including in relation to the entity's financial or contractual obligations with respect to the applicant, and the identification of all those holding an interest or ownership in the entity and the percentage of interest or ownership held in the entity. If an interest or ownership in the entity is not held by a natural person, the information and documentation requested herein must be provided going back to the level of ownership by a natural person (Principal Stakeholder).

PLEASE REFER TO ATTACHMENT E

75. Has construction, lease, rental, or purchase of the manufacturing facility been completed? ☐ Yes ☑ No

The applicant is providing a letter of intent and a draft lease under Attachment C.

If the answer to this question is "No," a statement indicating the anticipated source and application of the funds to be used in such purchase, lease, rental or construction, as well as anticipated date that construction, lease, rental or purchase will be completed must be included with this application.

76. Has construction, lease, rental, or purchase of the dispensing facilities been completed? ☐ Yes ☑ No

The applicant is submitting an executed lease for its Poughkeepsie dispensing site and letters of intent and draft leases for its other three (3) dispensing sites under Attachment C.

If the answer to this question is "No," a statement indicating the anticipated source and application of the funds to be used in such purchase, lease, rental or construction, as well as anticipated date that construction, lease, rental or purchase will be completed must be included with this application.

Section I: Required Attachments

Applications received without the required attachments will not be eligible for consideration until the required attachments are received. All such attachments must be postmarked by the Deadline for Submission of Applications.

77. ☑ The applicant has enclosed a non-refundable application fee in the amount of $10,000.

Applications received without the $10,000 application fee will not be considered.

78. ☑ The applicant has enclosed a conditionally refundable registration fee in the amount of $200,000.

Applications received without the $200,000 registration fee will not be considered.

The $200,000 registration fee will be refunded to applicants that are not selected as registered organizations.

79. ☑ The applicant has attached all required statements from Section H: Legal Disclosures, if applicable.

80. ☑ The applicant has attached identification of all real property, buildings, and facilities that will be used in manufacturing and dispensing activities, pursuant to PHL § 3365 and 10 NYCRR § 1004.5(b)(2), and labeled this attachment as "**Attachment A.**"

81. ☑ The applicant has attached identification of all equipment that will be used to carry out the manufacturing, processing, transportation, distributing, sale, and dispensing activities described in the application and operating plan, pursuant to PHL § 3365 and 10 NYCRR § 1004.5(b)(3), and labeled this attachment as "**Attachment B.**"

82. ☑ The applicant has attached copies of all applicable executed and proposed deeds, leases, and rental agreements or executed option contracts related to the organization's real property interests, showing that the applicant possesses or has the right to use sufficient land, buildings, other premises, and equipment, and contains the language required in 10 NYCRR § 1004.5(b)(9), if applicable, or, in the alternative, the applicant attached proof that it has posted a bond of not less than $2,000,000, pursuant to PHL § 3365 and 10 NYCRR § 1004.5(b)(9), and labeled this attachment as "**Attachment C.**"

83. ☑ The applicant has attached an operating plan that includes a detailed description of the applicant's manufacturing processes, transporting, distributing, sale and dispensing policies or procedures, and contains the components set forth in 10 NYCRR § 1004.5(b)(4), and labeled the operating plan as "**Attachment D – Operating Plan**" with the information clearly labeled and divided into the following sections:

Section 1 - Manufacturing (§ 1004.5(b)(4))
Section 2 - Transport and Distribution (§ 1004.5(b)(4))
Section 3 - Dispensing and Sale (§ 1004.5(b)(4))
Section 4 - Devices (§ 1004.5(b)(4)(i))
Section 5 - Security and Control (§ 1004.5(b)(4)(ii))
Section 6 - Standard Operating Procedure (§ 1004.5(b)(4)(iii))
Section 7 - Quality Assurance Plans (§ 1004.5(b)(4)(iv))
Section 8 - Returns, Complaints, Adverse Events and Recalls (§ 1004.5(b)(4)(v))
Section 9 - Product Quality Assurance (§ 1004.5(b)(4)(vi))
Section 10- Recordkeeping (§ 1004.5(b)(4)(vii))

84. ☑ The applicant has attached copies of the organizational and operational documents of the applicant, pursuant 10 NYCRR § 1004.5(b)(5), which must include the identification of all those holding an interest or ownership in the applicant and the percentage of interest or ownership held, and labeled this attachment as "**Attachment E.**"

85. ☑ "**Appendix A: Affidavit for Board Members, Officers, Managers, Owners, Partners, Principal Stakeholders, Directors, and Members**" has been completed for each of the board members, officers, managers, owners, partners, principal stakeholders, directors, and any person or entity that is a member of the applicant setting forth the information required in PHL § 3365(1)(a)(iv) and 10 NYCRR § 1004.5(b)(6).

86. ☑ The applicant has attached documentation that the applicant has entered into a labor peace agreement with a bona fide labor organization that is actively engaged in representing or attempting to represent the applicant's employees, pursuant to PHL § 3365(1)(a)(iii) and 10 NYCRR § 1004.5(b)(7), and labeled this attachment as "**Attachment F.**"

87. ☑ The applicant has attached a financial statement setting forth all elements and details of any business transactions connected with the application, including but not limited to all agreements and contracts for consultation and/or arranging for the assistance in preparing the application, pursuant to 10 NYCRR § 1004.5(b)(10), and labeled this attachment as "**Attachment G.**"

88. ☑ The applicant has completed **"Appendix B – Architectural Program"** and included the components set forth in 10 NYCRR § 1004.5(b)(11) and -(12).

89. ☑ The applicant has attached the security plan of the applicant's proposed manufacturing and dispensing facilities indicating how the applicant will comply with the requirements of Article 33 of the Public Health Law, 10 NYCRR Part 1004, and any other applicable state or local law, rule, or regulation, and labeled this attachment as "**Attachment H.**"

90. ☑ The applicant has attached the most recent financial statement of the applicant prepared in accordance with generally accepted accounting principles (GAAP) applied on a consistent basis and certified by an independent certified public accountant, in accordance with the requirements of 10 NYCRR § 1004.5(b)(16), and labeled this attachment as "**Attachment I.**"

91. ☑ The applicant has attached a staffing plan for staff to be involved in activities related to the cultivation of marijuana, the manufacturing and/or dispensing of approved medical marijuana products, and/or staff with oversight responsibilities for such activities that includes the requirements set forth in 10 NYCRR § 1004.5(b)(18) of the regulations and labeled this attachment as "**Attachment J.**"

92. ☑ The applicant has attached proof from the local internet service provider(s) that all of the applicant's manufacturing and dispensing facilities are located in an area with internet connectivity and labeled this attachment as **"Attachment K."** Internet connectivity will be required to support the use of a Seed-to-Sale Solution approved by the Department to record the registered organization's permitted activities.

93. ☑ The applicant has attached a timeline demonstrating the estimated timeframe from growing marijuana to production of a final approved product, and labeled this attachment as **"Attachment L."**

94. ☑ The applicant has attached a statement and/or documentation showing that the applicant is able to comply with all applicable state and local laws and regulations relating to the activities in which it intends to engage under the registration, pursuant to 10 NYCRR § 1004.5(b)(8), and labeled this attachment as **"Attachment M."**

Section J: Attestation and Signature

As the chief executive officer duly authorized by the board of a corporate applicant, or a general partner or owner of a proprietary applicant, I hereby authorize the release of any and all applicant information of a confidential or privileged nature to the Department and its agents. If granted a registration, I hereby agree to ensure the registered organization uses the Seed-to-Sale Solution approved by the Department to record the registered organization's permitted activities. I hereby certify that the information provided in this application, including in any statement or attachments submitted herewith, is truthful and accurate. I understand that any material omissions, material errors, false statements, misrepresentations, or failure to provide any requested information may result in the denial of the application or other action as may be allowed by law.

95. Signature: ▶ [signature]

96. Date Signed: 5/29/2015

97. Print Name: Joshua Stanley

The application must include a handwritten signature by the chief executive officer duly authorized by the board of a corporate applicant, or a general partner or owner of a proprietary applicant, and must be notarized.

Notary Name: Johnny Ngai	Notary Registration Number: 01NG6262875
Notary (Notary Must Affix Stamp or Seal) JOHNNY NGAI Notary Public - State of New York NO. 01NG6262875 Qualified in New York County My Commission Expires 6/4/16	Date: 5/29/15

CITIVA MEDICAL LLC

MEDICAL MARIHUANA PROGRAM

ATTACHMENT A

REAL PROPERTY/BUILDINGS/FACILITIES

AND

MUNICIPALITY LETTERS OF SUPPORT

The one (1) Manufacturing Facility will be located in Romulus (Seneca County), New York, at the site of the former Seneca Army Depot. Enclosed is a description of the 1,200 acres that are available for development at the site. Citiva Medical LLC will lease the land and construct its Manufacturing Facility on the property. Citiva Medical LLC will post two (2) security personnel staff members who will be on-site 24 hours per day, seven (7) days per week.

The four (4) Dispensary Facilities will be located in Rochester (Monroe County), Cicero (Onondaga County, near Syracuse), Poughkeepsie (Dutchess County, in the mid-Hudson Valley, 80 miles south of Albany) and Manhattan (New York City). Please find enclosed four (4) one-(1)-page documents that provide a description of each of the four (4) Dispensary Facility locations, including the address, parcel/lot number, acreage/building information, distance/time from Manufacturing Facility and the hours of operation of the sites.

Also enclosed are support letters from local municipalities. **It warrants emphasis that the Town of Romulus has issued a zoning permit for the Manufacturing Facility and the project is now shovel-ready.**

Manufacturing Facility #1 - Romulus

Facility Address:	5786 State Route 96 Romulus (Seneca County), New York 14541
Operation Hours:	7:00am - 11:00pm (Mon – Fri)

[redacted] Security Personnel at Manufacturing Facility: [redacted]

Former Seneca Army Depot

Finger Lakes Region
New York State

Agricultural Development & Distribution Facility

400,000 SF of existing heavily constructed buildings
1,200 Acres Available For Development
Secure Perimeter Fencing

Flaum Management Company, Inc.
400 Andrews Street, Suite 500
Rochester, NY 14604
(585) 546-4866

Contact
Michael Palumbo
Chief Operating Officer
mpalumbo@flaummgt.com

Former Seneca Army Depot
Seneca County - Upstate NY
Romulus, NY 14541

FLAUM
MANAGEMENT COMPANY, INC.
DEVELOPMENT • BROKERAGE • CONSULTING

MSA	Drive Time
Ithaca	*35 Minutes*
Syracuse	*1 Hour*
Rochester	*1 Hour*
Binghamton	*1 Hour, 30 Minutes*
Buffalo	*2 Hours*
Albany	*3 Hours*
New York City	*4 Hours, 30 Minutes*

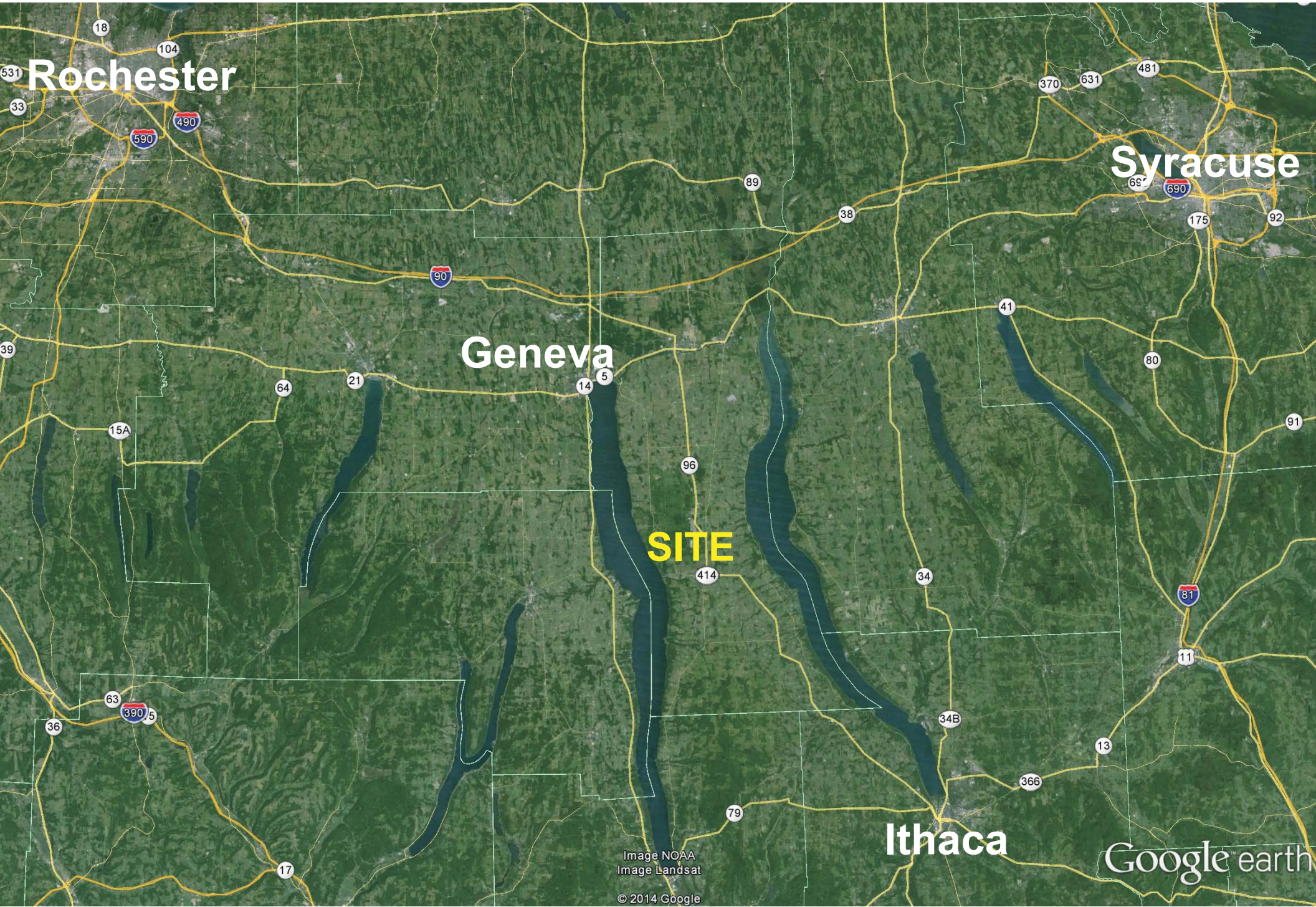
Rochester
Geneva
Syracuse
Ithaca
SITE
Image NOAA
Image Landsat
© 2014 Google
Google earth

Property Boundary

FLAUM
MANAGEMENT COMPANY, INC.
DEVELOPMENT • BROKERAGE • CONSULTING

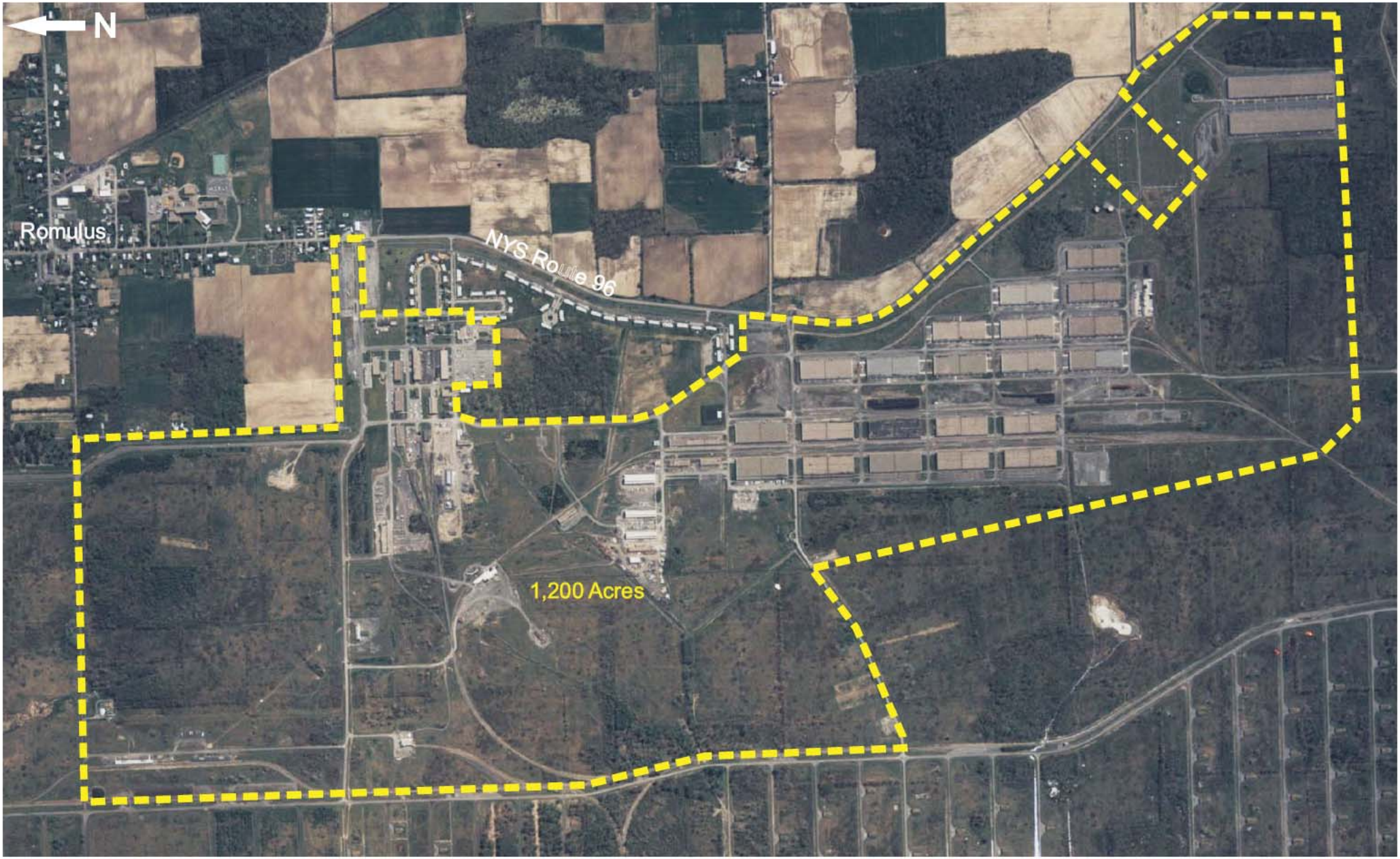

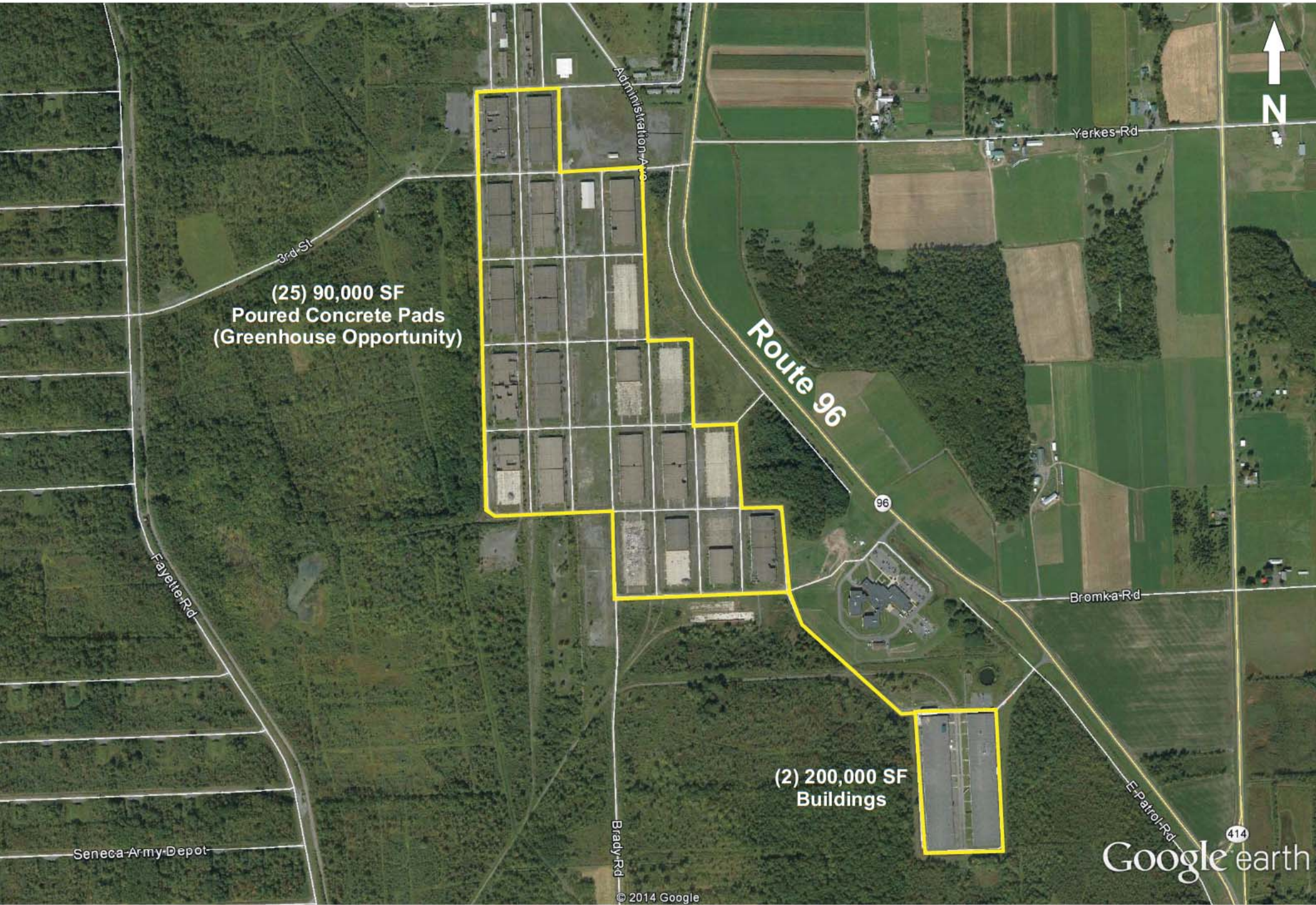
(25) 90,000 SF
Poured Concrete Pads
(Greenhouse Opportunity)
(2) 200,000 SF
Buildings
Route 96
96
N
Yerkes Rd
Bromka Rd
3rd St
Fayette Rd
Seneca Army Depot
Brady Rd
E Patrol Rd
414
Google earth
© 2014 Google

FLAUM
MANAGEMENT COMPANY, INC.
DEVELOPMENT • BROKERAGE • CONSULTING

Recent Upgrades / Infrastructure

-New 8” natural gas line
-New 2 MW substation
-Fiberoptic Cable
-Multiple Water Reservoirs (totaling 3.75M gallons)
-2 Onsite Sewage Treatment Plans (up to 850,000 gallons per day)
-Intake/Pump House at 650 gallons/minunte (from Seneca Lake)

Distribution Capabilities

-On Site Rail
-On Site Airstrip

Awards & Grants

-$2M incentive from NYSERDA for the production of electricity
-$7M in tax-exempt bond financing for capital purchases of equipment and infrastructure

-Home of the Seneca AgBio Green Energy Park

Dispensing Facility #1 - Rochester

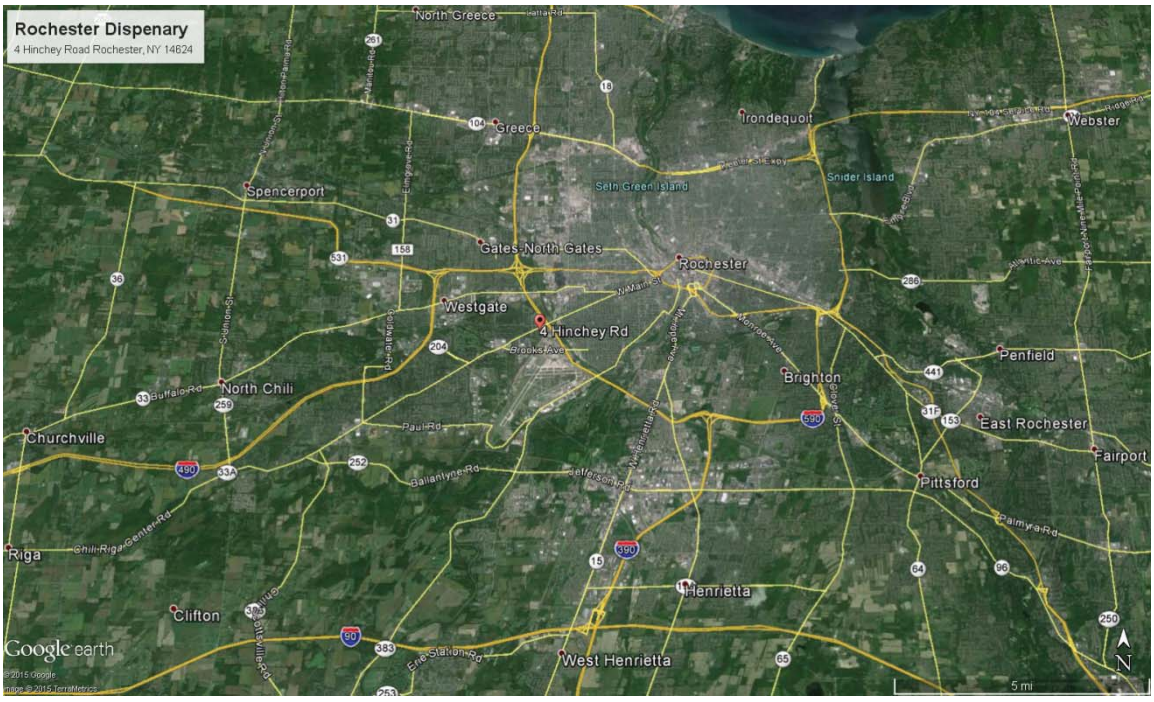

- Address: 4 Hinchey Road, Rochester, NY 14624
- Parcel #: 119.20-3-36.1-4-26
- Description: 2,677 SF End Cap space within a 9,745 SF Retail building with a total of four separate spaces. Plenty of at-grade parking. Directly at the Chili Ave exit off Interstate 390.
- Distance and Travel Time from Manufacturing Facility: 66 Miles; 1 hr 15 mins
- Hours of Operation: 9:00am - 7:00pm (Mon - Fri)
  10:00am – 5:00pm (Sat)
  10:00am – 4:00pm (Sun)

Dispensing Facility #2 – Syracuse

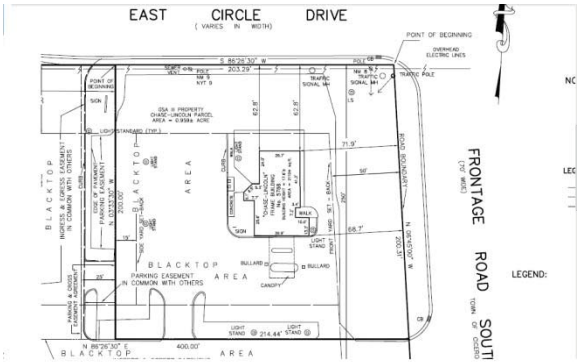

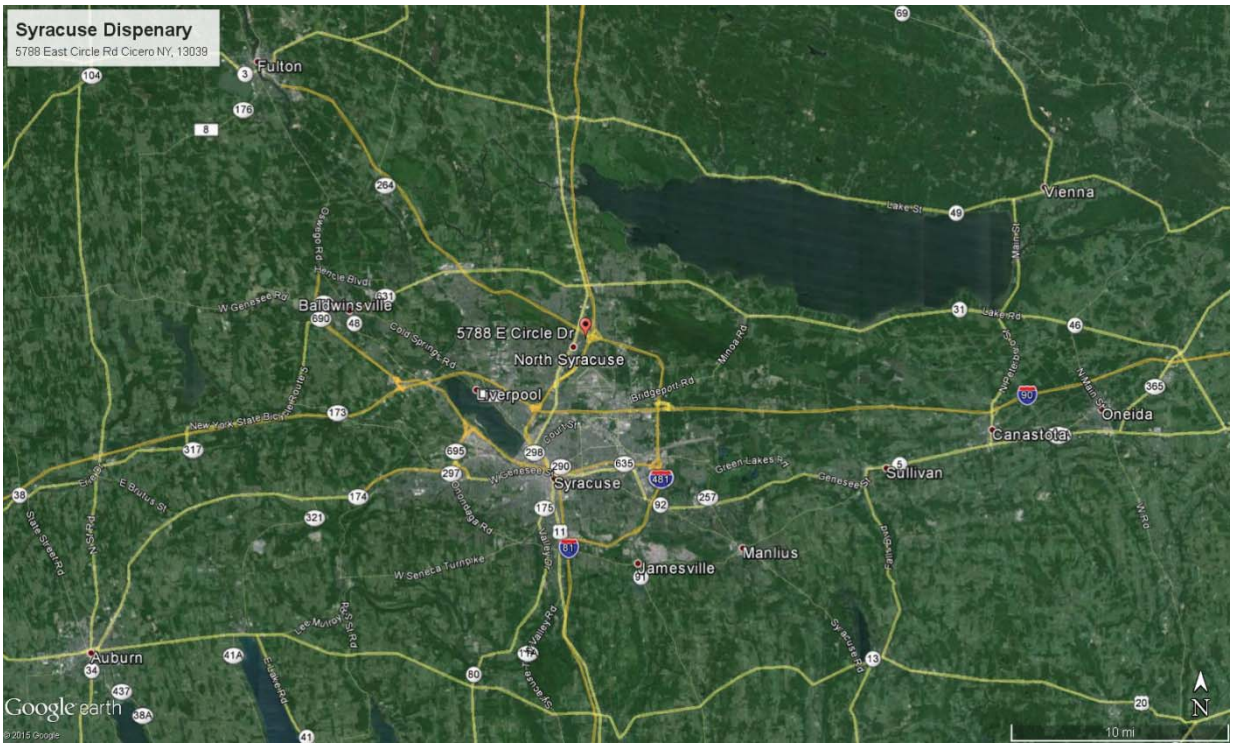

- Address: 5788 East Circle Drive, Cicero, NY 13039
- Parcel #: 312289-035-01-06.2
- Description: Approximately 1 acre parcel with a free standing 2,122 SF fromer bank branch. Over 30 parking spaces. Located at the East Circle Drive exit of both I-81 and I-480.
- Distance and Travel Time from Manufacturing Facility: 62 Miles; 1 hr 10 mins
- Hours of Operation: 9:00am - 7:00pm (Mon - Fri)
  10:00am – 5:00pm (Sat)
  10:00am – 4:00pm (Sun)

Dispensing Facility #3 - Hudson Valley

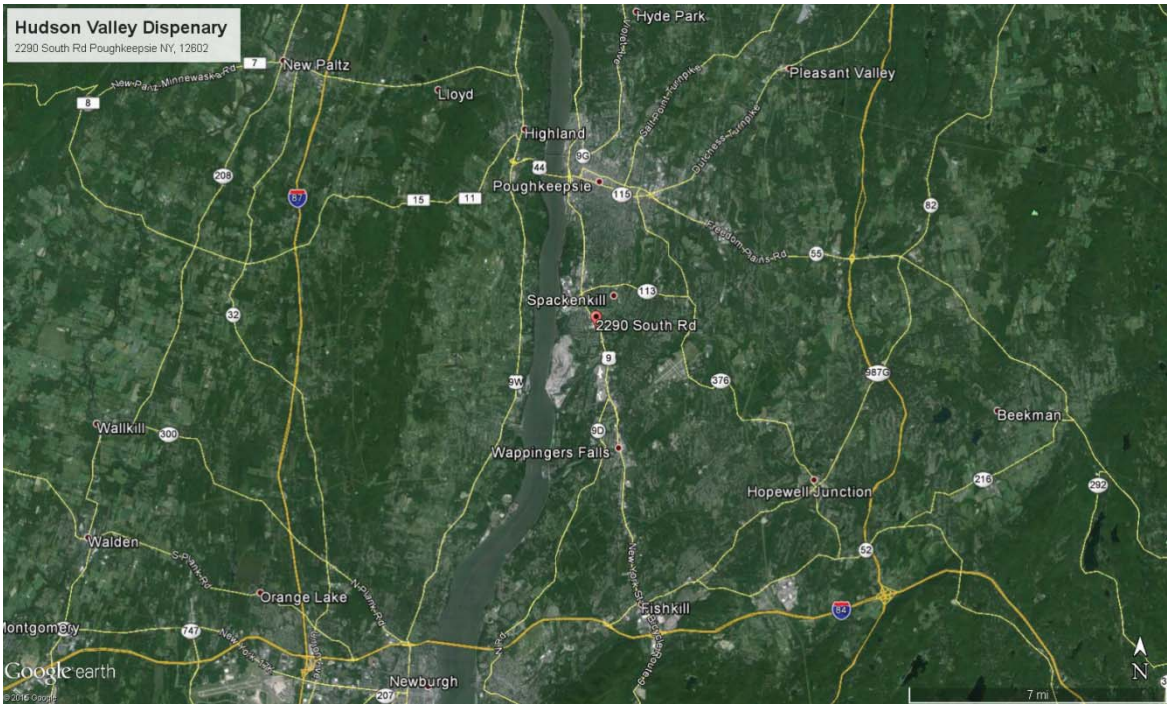

- Address: 2290 South Road, Poughkeepsie NY, 12601
- Parcel #: 134689-6159-01-211992-0000
- Description: 1,932 SF End Cap space within a 14,200 SF Retail Building with three tenant spaces. Other tenants include Half Time Beverage and Crew Restaurant. Plenty of at grade surface parking immediately adjacent to the entrance. Located on a main commercial corridor of Route 9.
- Distance and Travel Time from Manufacturing Facility: 230 Miles; 4 hr 10 mins
- Hours of Operation: 9:00am - 7:00pm (Mon - Fri)
  10:00am – 5:00pm (Sat)
  10:00am – 4:00pm (Sun)

Dispensing Facility #4 - Manhattan

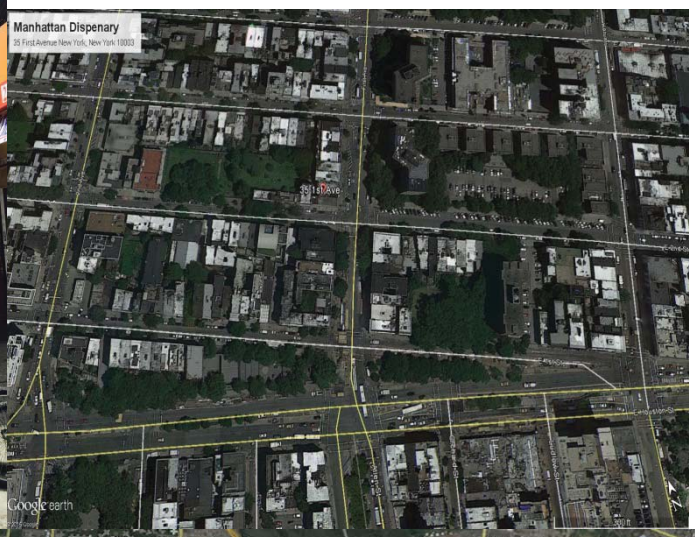

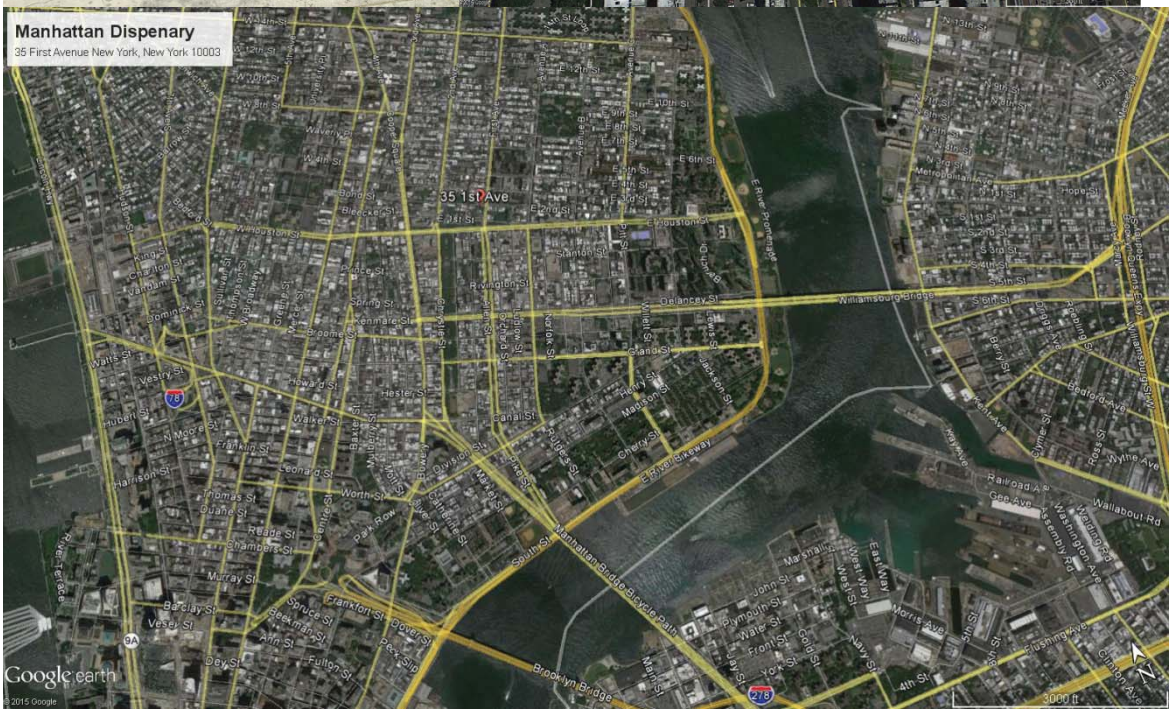

- Address: 35 1st Avenue, New York, New York 10003
- Parcel: Borough of Manhattan, Block 444, Lot 42
- Description: Approximately 1,000 SF of Ground Floor space with basement. Near the corner of First Avenue and 2nd street, one block north of Houston St and 5 blocks from a full interchange of the FDR Drive and just one block from the Lower East Side/Second Ave Subway Station.
- Distance and Travel Time from Manufacturing Facility: 254 Miles; 4 hr 40 mins
- Hours of Operation: 9:00am - 7:00pm (Mon - Fri)
  10:00am – 5:00pm (Sat)
  10:00am – 4:00pm (Sun)

TOWN OF ROMULUS

Tom Bouchard, Chairman
William Karlsen, Vice-Chairman
Cindy Meckley, Member
Al Nivison, Member
Mary Joslyn, Member
Kate Siniscropi, Member
Sue Ellen Balluff, Member

PLANNING BOARD
1435 Prospect Street
P.O. Box 177
Willard, New York 14588
PHONE: 607-869-9326
FAX: 607-869-5763
Email: Romulus@rochester.rr.com

June 2, 2015

John F. Caruso, PE. PMP
242 West Main Street, Suite 100
Rochester, NY 14614

Dear John,

This is to confirm that as a result of meeting with the Town of Romulus Planning Board on June 1, 2015, we were able to determine that the Citiva Medical project is an allowable use and will not require a special use permit in order to proceed.

It was a pleasure meeting with you last night. The board appreciated your willingness to discuss this important project. We extend our sincerest wishes for success for your project.

Please do not hesitate to contact us if you have any concerns, or if we can be of any further assistance.

Sincerely,

Tom Bouchard, Chairman
Planning Board

TOWN OF ROMULUS ZONING PERMIT

Date: 3 Jun 15 Permit Number 16-15

Applicant: Citiva Medical, 7378 Amboy Road, Staten Island, NY 10309

Permit to: Citiva Medical, 7378 Amboy Road, Staten Island, NY 10309

Description: New Building

At Location: 5786 State Route 96

Tax Map#: 8-1-03

Zoning District: Agricultural

Lot Size: 11.85 acres

Structure Is To Be: 15' Height, 180' Width and 500' Length

Special Conditions: Must Get A County Permit

Owner: Citiva Medical, 7378 Amboy Road, Staten Island, NY 10309

Permit Fee: $25.00 Code Enforcement Officer: _____ Date: 3 Jun 15

THE ISSUANCE OF THIS PERMIT DOES NOT RELEASE THE APPLICANT FROM THE CONDITIONS OF ANY APPLICABLE BUILDING OR HEALTH CODE RESTRICTIONS.

SENECA COUNTY
CHAMBER of COMMERCE

June 2, 2015

New York State Department of Health
Bureau of Narcotic Enforcement
Medical Marijuana Program
150 Broadway
Albany, NY 12204

To Whom It May Concern:

On behalf of more than 550 member businesses and trusted partners of the Seneca County Chamber of Commerce (the Chamber), I am pleased to express our full support for Citiva Medical in regards to their application for a medical marijuana license and their corresponding investment in the Town of Romulus, NY.

The Chamber is one of the Finger Lakes region's largest and most influential business organizations. As the leading voice of business in the greater Seneca County area for more than 40 years, the Chamber facilitates interaction between our membership, government, the general public and those looking to do business in our community. We have excelled in four core areas: Tourism/Economic Development, Public Policy and Advocacy, Health Insurance and Stakeholder Education. We are proud to take an active role in the economic growth of our community.

To that end, the Chamber has closely followed the effort to bring medical marijuana to New York State. We believe the initiative has great potential to provide relief for thousands of patients suffering from serious illnesses throughout the Finger Lakes region as well as the ability to help transform our community into a respected, leader of innovation and research.

Furthermore, the Chamber applauds the New York State Department of Health for its comprehensive approach to implementing a safe, effective and accessible medical marijuana program for all New Yorkers – particularly upstate.

We urge your consideration of Citiva Medical as one of the five licensed organizations to manufacture and dispense medical marijuana in New York State. Their record of achievement and corporate philosophy closely aligns with our mutual goals for the future success of this program.

Sincerely yours,

Mark Benjamin
Chairman of the Board
Seneca County Chamber of Commerce

2020 US Route 20 | Seneca Falls, NY 13148 | p. (315) 568-2906 | f. (315) 568-1730 | tf. (800) 732-1848
www.senecachamber.org | info@senecachamber.org

Town of Gates

1605 Buffalo Road
Rochester, New York 14624
585-247-6100

Supervisor
Mark W. Assini

Town Council

Frank X. Alkofer
Lee A. Cordero
Christopher B. DiPonzio
Richard A. Warner

5/20/15
New York State Department of Health
Bureau of Narcotics Enforcement
Medical Marijuana Program
150 Broadway
Albany, New York 12204

New York State approved the use of medical marijuana by passing the Compassionate Care Act in 2014. Patients that suffer from terminal illnesses like Cancer, Huntington's and ALS as well as debilitating diseases like Epilepsy and MS will find relief through this newly authorized medication. This medication is not smoked and can't be consumed in a public place. This is truly a therapeutic drug.

[redacted] Families deserve this medical option for their loved ones.

Therefore, I urge you to grant Citiva Medical a license to dispense medical marijuana in New York State. Citiva's plan to open a dispensary in our town in a properly zoned retail location will be another resource that qualifying patients can utilize in our area to get the relief they need from some of mankinds most horrific diseases. Citiva's unparalleled security plan to move and sell their medicine make me believe Citiva and the residents of Gates will have a long and fruitful partnership.

Sincerely,

Mark W. Assini

Gates Town Supervisor

Town Council
Bill Meyer, Deputy Supervisor
Vern Conway
Mike Becallo
Mark Venesky
Dick Cushman

Town Clerk
Tracy M. Coslimon
(315) 699-8109

Supervisor
Jessica Zambrano
(315) 699-1414

Highway Superintendent
Christopher J. Woznica
(315) 699-2745
Fax (315) 699-2746

Receiver of Taxes
Sharon M. Edick
(315) 699-2756
Fax (315) 699-9562

TOWN OF CICERO

COUNTY OF ONONDAGA
8236 Brewerton Road, Cicero, New York 13039 • FAX 315-699-0039 • e-mail: jzambrano@ciceronewyork.net

May 29, 2015

To whom it may concern:

Citiva Medical has put together an application to start a project that includes the cultivation, manufacture, distribution and sale of medical marijuana. While the cultivation and manufacturing functions will be located in other sites, Citiva has selected Cicero as a dispensing center.

We are pleased to support this new industry endeavor, primarily because of the therapeutic benefits a medical marijuana program will provide to those patients in need. We are also excited to be part of this new start-up industry that will, no doubt, set the standard across the county.

The Cicero pharmacy site that Citiva has selected is an ideal location because it is very close to an Interstate-81 exit, making it easily accessible to patients from across our Central New York area. The building has ample space and parking for patients and employees. Additionally, the site is close to numerous retail shops and food establishments for convenience.

The Citiva leadership anticipates employing approximately 20 professional and security personnel, so we are pleased with this job growth opportunity for our Town.

Given all the positive outcomes of this endeavor for patients in need and for our Town, I would like to add our full support for the project. Please feel free to contact me should you have any questions: (315) 699-1414 or jzambrano@ciceronewyork.net.

Sincerely,

Jessica Zambrano

Jessica Zambrano
Cicero Town Supervisor

Town of Poughkeepsie
Office of Municipal Development

1 Overocker Road
Poughkeepsie, NY 12603

845-485-3657 Phone
845-486-7885/790-4772 Fax

June 4, 2015

VIA E-MAIL

Dr. Howard Zucker, Commissioner
New York State Department of Health
Corning Tower
Empire State Plaza
Albany, New York 12237

Re: Citivia Medical Proposed Lease Site
2290 South Road, Town of Poughkeepsie

Dear Commissioner Zucker:

In regard to Citivia Medical's proposed lease of a ±2,150 square foot space at 2290 South Road, Tax Parcel No. 6159-01-211992, in the Town of Poughkeepsie, please be advised that the property is zoned Highway Business (B-H) District, which permits retail uses. Accordingly, use of the site for a retail medical dispensary is permitted under Chapter 210 of the Town of Poughkeepsie Code.

Please contact me with any questions.

Very Truly Yours:

Neil A. Wilson
Director of Municipal Development

NAW:me

Hon. Todd Tancredi, Supervisor, via email
Hon. Joseph Lepore, Councilman, via email
Sarah Davis, Zoning Administrator, via email
Frank M. Cicero, via email
Patrick H. McCarthy via email
Ron Hicks, via email

COUNTY OF DUTCHESS

MARCUS J. MOLINARO
COUNTY EXECUTIVE

June 3, 2015

Dr. Howard Zucker
Commissioner
New York State Department of Health
Corning Tower
Empire State Plaza
Albany, NY 12237

Dear Dr. Zucker:

Ensuring our residents have access to the finest health care options available has always been one of my top priorities, which is why I have closely followed efforts in Albany to expand the pharmaceutical industry in New York to manufacture and dispense medication derived from cannabinoids under the state's Compassionate Care Act.

The Act provides for the initial licensing of up to five organizations in New York State and allows the Commissioner to license additional organizations in the future. As with the manufacture and distribution all controlled substances, it is critically important that each license is granted only to entities that take a pharmaceutical approach to their production and distribution, and that each entity maintain the highest level of quality and security.

My office has met with representatives from Citiva Medical, and after careful consideration and review, I believe they represent the highest level of quality, security, and expertise necessary to secure a license that would authorize them to manufacture and dispense pharmaceuticals authorized under the Compassionate Care Act in New York State.

Sincerely,

Marcus J. Molinaro
Dutchess County Executive

CITIVA MEDICAL LLC

MEDICAL MARIHUANA PROGRAM

ATTACHMENT B

EQUIPMENT LIST

Please find enclosed an Equipment List that includes required equipment related to all operations of the applicant, including, but not limited to manufacturing, dispensing, transportation and security.

CITIVA MEDICAL LLC
EQUIPMENT COST - SUMMARY

	Total Costs
Manufacturing Facility	**$1,812,750**
Cultivation	$896,284
Processing Area	$486,480
Transportation	$140,000
Furniture, Equipment & Other Allowance	$165,267
Security	$90,000
IT	$34,719
Dispensaries	**$187,250**
Security	$100,680
Furniture, Equipment & Other Allowance	$50,000
IT	$36,570
Grand Total	**$2,000,000**

CITIVA MEDICAL LLC
EQUIPMENT COST - DETAILS

Site	Section	Department	Description	Number	Total
Dispensaries	IT		APG Universal Cable	5	$30
Dispensaries	Security		First Alert Digital Locking Steel Security Box	1	$30
Manufacturing Facility	Processing Area	Capsule Manufacturing	Food-Grade Brush for blender powder	1	$35
Dispensaries	IT		6' Zebra Printer Cable	5	$60
Dispensaries	IT		Green Thermal Receipt Paper Case	2	$140
Manufacturing Facility	IT	IT	Cisco SMARTnet extended service agreement	11	$319
Manufacturing Facility	Processing Area	Vape Cartridge Manufacturing	Case assembly table station	1	$400
Dispensaries	IT		Motorola Symbol Barcode Scanner	5	$500
Dispensaries	Security		Futronic Fingerprint Scanner	5	$650
Dispensaries	IT		21.5 LED Monitor	5	$750
Dispensaries	IT		Honeywell Scanner with stand	5	$750
Dispensaries	IT		1 Roll Direct Thermal Label for Inventory Barcodes	5	$790
Dispensaries	IT		APG Cash Drawer	5	$800
Manufacturing Facility	Processing Area	Capsule Manufacturing	Precision scale 6000gm/0.01gm	1	$895
Manufacturing Facility	Processing Area	Particle Sizing	Stainless 45L Collection Vessel	2	$900
Manufacturing Facility	IT	IT	Cisco 2504 Wireless Controller with 5 Access Point License	1	$927
Dispensaries	IT		Thermal Receipt Printer	5	$1,000
Manufacturing Facility	IT	IT	Cisco SMARTnet extended service agreement	6	$1,014
Manufacturing Facility	Processing Area	Rotovap Extraction and fractionation	Scale 34kg/0.1gm	1	$1,200
Manufacturing Facility	Cultivation		90 tons AC @$1600 per ton	1	$144,000
Dispensaries	IT		Zebra Plus Direct Thermal Label Printer	5	$1,500
Manufacturing Facility	Cultivation		1000w DE lamps	288	$86,400
Manufacturing Facility	Processing Area	Rotovap Extraction and fractionation	Flask handler	1	$1,942
Dispensaries	IT		Barcode scanner (handheld)	5	$2,250
Manufacturing Facility	Cultivation		Miscellaneous: (I.e. installation, inline heppa filters, germicidal 254nm inline mold inhibitors, core drilling etc.)	1	$50,000
Manufacturing Facility	Cultivation		5'x19' Rolling tables @$750ea including freight	48	$36,000
Manufacturing Facility	Processing Area	Tincture Manufacturing	Shrink tunnel	1	$2,500
Manufacturing Facility	Processing Area	Vape Cartridge Manufacturing	Shrink tunnel	1	$2,500
Manufacturing Facility	Cultivation		8.8 pint per kwh industrial overhead dehumidifiers	4	$8,000
Manufacturing Facility	IT	IT	Cisco ASA 5512-X Firewall Edition - security appliance	1	$2,710
Manufacturing Facility	Processing Area	Rotovap Extraction and fractionation	Vacuum pump	1	$3,800
Manufacturing Facility	IT	IT	Cisco SMARTnet extended service agreement	8	$3,840
Dispensaries	Security		Double Door Pharmacy Safe	2	$4,000
Manufacturing Facility	Processing Area	Rotovap Extraction and fractionation	Recirculating Chiller	1	$4,000
Manufacturing Facility	IT	IT	Cisco Aironet 1602i Controller-based - wireless access point	10	$4,720
Manufacturing Facility	Cultivation		12" Can Fan / Can Filter combo	8	$6,000
Manufacturing Facility	Cultivation		Drip Irrigation System	1	$5,000
Manufacturing Facility	IT	IT	Cisco Catalyst 2960S-48FPS-L - switch - 48 ports	1	$5,189
Manufacturing Facility	Processing Area	Particle Sizing	Vertical Cutting Mixer	1	$5,500
Manufacturing Facility	Cultivation		Co2 generators	8	$4,800
Manufacturing Facility	IT	IT	Bar code scanners	20	$6,000
Manufacturing Facility	Processing Area	Rotovap Extraction and fractionation	Final extraction and decarboxylation	2	$7,790
Manufacturing Facility	Processing Area	Rotovap Extraction and fractionation	Secondary extraction	2	$7,790
Dispensaries	IT		Cisco Internet Gateway	4	$8,000
Manufacturing Facility	Cultivation		Clone room: 2'x4' T5 lamps	6	$2,700
Manufacturing Facility	IT	IT	Computer workstations	20	$10,000
Manufacturing Facility	Processing Area	Capsule Manufacturing	V-Blender with liquid addition	1	$12,950
Manufacturing Facility	Processing Area	Rotovap Extraction and fractionation	Vacuum pump	1	$13,201
Manufacturing Facility	Processing Area	Vape Cartridge Manufacturing	Vape filling system	1	$17,900
Manufacturing Facility	Processing Area	Rotovap Extraction and fractionation	Recirculating Chiller	1	$19,177
Dispensaries	IT		48 Port Cisco Networking Switch	4	$20,000

CITIVA MEDICAL LLC
EQUIPMENT COST - DETAILS

Manufacturing Facility	Security		Access (Card and Biometric access system)	1	$20,000
Manufacturing Facility	Processing Area	Tincture Manufacturing	Homogenizer - Ultrasonic continuous	1	$24,000
Manufacturing Facility	Processing Area	Capsule Manufacturing	Automatic Capsule filling machine	1	$28,000
Dispensaries	Security		Access (Card and Biometric access system)	4	$32,000
Dispensaries	Security		Alarm system (Perimeter, Duress, Panic, Hold-up, Automatic Voice Dialer, Failure Notification System)	4	$32,000
Dispensaries	Security		CCTV System (Cameras, Monitors, Hard Drive storage)	4	$32,000
Manufacturing Facility	Security		Alarm system (Perimeter, Duress, Panic, Hold-up, Automatic Voice Dialer, Failure Notification System)	1	$35,000
Manufacturing Facility	Security		CCTV System (Cameras, Monitors, Hard Drive storage)	1	$35,000
Manufacturing Facility	Cultivation		700 gallon cone bottom nutrient tank	1	$2,500
Dispensaries	Furniture, Equipment & Other Allowance		Furniture, Equipment & Other Allowance	1	$50,000
Manufacturing Facility	Cultivation		1000gpd / 100k gallon chlorine filtration RO system	1	$2,500
Manufacturing Facility	Processing Area	Rotovap Extraction and fractionation	Bulk extraction	1	$82,000
Manufacturing Facility	Cultivation		1000 Gallon Cone bottom RO tank	1	$1,500
Manufacturing Facility	Furniture, Equipment & Other Allowance		Furniture, Equipment & Other Allowance	1	$165,267
Manufacturing Facility	Transportation	Vehicle (Builtin safe, Radio system, GPS tracker)	Mercedes Sprinter	2	$140,000
Manufacturing Facility	Cultivation		Digital Co2 monitor/controller	2	$1,300
Manufacturing Facility	Processing Area	CO2 Extraction System	Vessels, Heater, Chiller, Plumbing, Tanks etc	1	$250,000
Manufacturing Facility	Cultivation	Greenhouse	Dehumidification and climate control system for greenhouse	4	$160,000
Manufacturing Facility	Cultivation	Greenhouse	High quality efficient light fixtures to supplement natural light in the greenho	404	$121,200
Manufacturing Facility	Cultivation	Greenhouse	Tables are used for cultivation in greenhouse	142	$79,946
Manufacturing Facility	Cultivation	Greenhouse	Growing media for 2nd stage of veg and flowering - 1,728 per week - Mater	0	$0
Manufacturing Facility	Cultivation	Greenhouse	Growing media for first stage of veg growth - 2,185 per week - Material Cos	0	$0
Manufacturing Facility	Cultivation	Greenhouse	Aluminum frame ste on top of palletized tables to support crop weight	142	$29,110
Manufacturing Facility	Cultivation	fertigation area	Controls 12 electronic injectors, control water pump, and 5 irrigation valves	1	$23,333
Manufacturing Facility	Cultivation	fertigation area	Creates high levels of dissolved oxygen in irrigation water to eliminate path	1	$14,000
Manufacturing Facility	Cultivation	Greenhouse	Raises and lowers palletized tables onto transport lines to move in and out	31	$13,473
Manufacturing Facility	Cultivation	Greenhouse	Blackout screen for curtain system in greenhouse to control photoperiod - 4	16,000	$11,040
Manufacturing Facility	Cultivation	clone room	Media for propagating cuttings 2,880 per week	0	$0
Manufacturing Facility	Cultivation	Greenhouse	Controls climate conytrol equipment in greenhouse including heating, coolir	0	$7,667
Manufacturing Facility	Cultivation	fertigation area	Filtration of fresh irrigation water of Total Dissolved Solids Up to 9000 gallo	0	$7,333
Manufacturing Facility	Cultivation	Greenhouse	Shade screen for climate maintenance in greenhouse - 72,000 sq ft	24,000	$6,000
Manufacturing Facility	Cultivation	fertigation area	Filtration of particulate matter returning throug the irrigtion system	1	$5,800
Manufacturing Facility	Cultivation	fertigation area	Storage tanks for frech and recycled irrigation water	1	$5,700
Manufacturing Facility	Cultivation	Clone room	Transports water to clone racks	83	$5,417
Manufacturing Facility	Cultivation	Greenhouse	Blackout screen for roll-up walls in greenhouse - 31,320 sq ft	10,440	$4,907
Manufacturing Facility	Cultivation	Greenhouse	Delivers irrigation water from main supply lines to individual palletized table	284	$4,260
Manufacturing Facility	Cultivation	Greenhouse	Circulation fans to effectively stir and mix air in the cultivation environment.	9	$3,600
Manufacturing Facility	Cultivation	fertigation area/Greenhouse area	Distribution of main irrigation lines, drainage lines, and irrigation headers. -	3,333	$3,333
Manufacturing Facility	Cultivation	Greenhouse	Tube motors roll blackout screens in greenhouse up and down	10	$3,000
Manufacturing Facility	Cultivation	Greenhouse	Motors drive curtain systems in greenhouse to control light transmission an	3	$3,000
Manufacturing Facility	Cultivation	Greenhouse	Enables washing and sterilizing of tables by tipping containers at 90 degres	0	$2,833
Manufacturing Facility	Cultivation	fertigation area	Communicates real-time EC readings to the Fertigation Manager Computer	1	$2,000
Manufacturing Facility	Cultivation	Greenhouse	Irrigation drip emitter	3,554	$1,777
Manufacturing Facility	Cultivation	Greenhouse	Stake to support drip emitter	6,832	$1,708
Manufacturing Facility	Cultivation	Greenhouse	Records and communicates temperature and humidity in the greenhouse	4	$1,600
Manufacturing Facility	Cultivation	Greenhouse	Irrigation fitting	5,680	$1,420
Manufacturing Facility	Cultivation	Greenhouse	Irrigation line - 27,000'	9,000	$1,350
Manufacturing Facility	Cultivation	fertigation area	Controls the flow of water to the designated irrigation zones	4	$1,083
Manufacturing Facility	Cultivation	Clone room	To provide full spectrum light to clones	8	$1,080
Manufacturing Facility	Cultivation	greenhouse	Irrigation fitting	142	$1,065

CITIVA MEDICAL LLC
EQUIPMENT COST - DETAILS

Manufacturing Facility	Cultivation	fertigation area	Irrigation pumps	1	$1,000
Manufacturing Facility	Cultivation	fertigation area	Irrigation pumps	1	$1,000
Manufacturing Facility	Cultivation	fertigation area	Mixes leachate water and fresh water:	1	$1,000
Manufacturing Facility	Cultivation	Greenhouse	Irrigation fitting	3,500	$875
Manufacturing Facility	Cultivation	fertigation area	Controls flow of irrigation water through various pumps and stages	2	$833
Manufacturing Facility	Cultivation	fertigation area	Controls flow of irrigation water	2	$833
Manufacturing Facility	Cultivation	Greenhouse	Weather station monitors externtal climate conditions and adjusts internal c	0	$833
Manufacturing Facility	Cultivation	Clone room	Modular cloning rack system.	3	$800
Manufacturing Facility	Cultivation	Greenhouse	CO2 meters to monitor CO2 levels in the greenhouse	2	$800
Manufacturing Facility	Cultivation	Greenhouse	Measures available light in the greenhouse and signals shading or supplem	2	$800
Manufacturing Facility	Cultivation	fertigation area	Controls irrigation pumps	0	$667
Manufacturing Facility	Cultivation	fertigation area	Controls motorized irrigation valves	0	$667
Manufacturing Facility	Cultivation	Greenhouse	Connects the irrigation supply lines to the table fittings	142	$639
Manufacturing Facility	Cultivation	Greenhouse	Irrigation fitting	426	$639
Manufacturing Facility	Cultivation	fertigation area	Catchment cistern for catchment of recycled irrigation water	1	$633
Manufacturing Facility	Cultivation	Greenhouse	Variable speed controller to control stirring fans	2	$600
Manufacturing Facility	Cultivation	greenhouse	Irrigation fitting	142	$568
Manufacturing Facility	Cultivation	Greenhouse	Irrigation fitting	1,880	$470
Manufacturing Facility	Cultivation	Greenhouse	Irrigation fitting	284	$426
Manufacturing Facility	Cultivation	greenhouse	Irrigation fitting	142	$391
Manufacturing Facility	Cultivation	Clone room	One for each cloning rack to control the three light fixtures on a rack.	3	$333
Manufacturing Facility	Cultivation	Clone room	Contains propagating clones	8	$296
Manufacturing Facility	Cultivation	Greenhouse	Irrigation fitting	142	$249
Manufacturing Facility	Cultivation	clone room	Contains propagation trays	32	$240
Manufacturing Facility	Cultivation	greenhouse	Irrigation fitting	233	$233
Manufacturing Facility	Cultivation	Clone room	Holds the fertilizer water for the feeding of the clones	3	$213
Manufacturing Facility	Cultivation	Clone room	Used to pump the fertilized water through the hydroponic trays to water the	3	$187
Manufacturing Facility	Cultivation	Clone room	Controls pumps for clone propagation racks	3	$187
Manufacturing Facility	Cultivation	Greenhouse	Stake to support drip emitter	728	$182
Manufacturing Facility	Cultivation	greenhouse	Irrigation fitting	142	$142
Manufacturing Facility	Cultivation	greenhouse	Irrigation fitting	142	$142
Manufacturing Facility	Cultivation	Greenhouse	Irrigation fitting	142	$142
Manufacturing Facility	Cultivation	greenhouse	Irrigation fitting	142	$107
Manufacturing Facility	Cultivation	Greenhouse	Seals endcaps of PVC irrigation distribution piping	48	$72
Manufacturing Facility	Cultivation	Greenhouse	To allow for manual maintenance of irrigation equipment	5	$58
Manufacturing Facility	Cultivation	Greenhouse	Connects PVC supply and return irrigation lines	18	$44
Manufacturing Facility	Cultivation	Greenhouse	Irrigation pipe fitting	17	$43
Manufacturing Facility	Cultivation	Greenhouse	Irrigation drip emitter	84	$42
Manufacturing Facility	Cultivation	clone room	Contains propagation trays	32	$40
Manufacturing Facility	Cultivation	Greenhouse	Irrigation fitting	138	$35
Manufacturing Facility	Cultivation	Clone room	Holds the flats for propagation media	32	$32
Manufacturing Facility	Cultivation	Clone room	Part of the irrigation and drainage of the clone trays	11	$19
Manufacturing Facility	Cultivation	Clone room	Secures all tubing to fittings for clone racks	13	$13
Manufacturing Facility	Cultivation	Clone room	Keeps large debris from clogging the clone irrigation system.	11	$8
Manufacturing Facility	Cultivation	Greenhouse	Maintains the pressure throughout the irrigation system, and to avoid cross	2	$8
Manufacturing Facility	Cultivation	Greenhouse	Irrigation drip emitter	8	$8

CITIVA MEDICAL LLC

MEDICAL MARIHUANA PROGRAM

ATTACHMENT C

PROOF OF BOND POSTING

AND

DOCUMENTATION OF RIGHT TO USE LAND, BUILDINGS, PREMISES, EQUIPMENT

OneBeacon
INSURANCE GROUP

BOND
(License or Permit - Continuous)

Bond No. 800-013-727

KNOW ALL MEN BY THESE PRESENTS:

THATWE Citiva Medical, LLC as Principal, and ATLANTIC SPECIALTY INSURANCE COMPANY, a corporation duly incorporated under the laws of the State of Minnesota and authorized to do business in the State of New York, as Surety, are held and firmly bound unto New York State Department of Health, as Obligee, in the penal sum of Two Million and No/100 ********** (2,000,000.00) Dollars, for the payment of which we hereby bind ourselves, our heirs, executors and administrators, jointly and severally, firmly by these presents.

WHEREAS, the Principal has obtained or is about to obtain a license or permit for Medical Marijuana Program

NOW, THEREFORE, THE CONDITIONS OF THIS OBLIGATION ARE SUCH, that if the Principal shall faithfully comply with all applicable laws, statutes, ordinances, rules or regulations, pertaining to the license or permit issued, then this obligation shall be null and void; otherwise to remain in full force and effect.

This bond shall become effective on the 3rd day of June, 2015

PROVIDED, that regardless of the number of years this bond is in force, the Surety shall not be liable hereunder for a larger amount, in the aggregate, than the penal sum listed above.

PROVIDED FURTHER, that the Surety may terminate its liability hereunder as to future acts of the Principal at any time by giving thirty (30) days written notice of such termination to the Obligee.

SIGNED, SEALED AND DATED this 3rd day of June, 2015

Citiva Medical, LLC

By: _____
Principal

ATLANTIC SPECIALTY INSURANCE COMPANY
77 WATER STREET, 17TH FLOOR, NEW YORK, NY 10005

By: _____
D. Nicholas Daikeler
Attorney-in-fact

01/13

ACKNOWLEDGMENT OF SURETY

STATE OF NEW YORK }
COUNTY OF New York } SS:

On the 3rd day of June in year 2015 before me personally came D. Nicholas Blaikie to me known, who being by me duly sworn, did depose and say that he/she resides at [redacted], that he/she is the Attorney-in-Fact of Atlantic Specialty Insurance Company, the corporation described in and which executed the above instrument; that he/she knows the corporate seal of said corporation, that the seal affixed to such instrument is such corporate seal: that it was so affixed by order of the Board of Directors of said corporation, and, that he/she signed his/her name thereto by like order; and that said corporation is duly authorized to transact business in the State of New York in pursuance of the statutes of such case made and provided, that the Superintendent of insurance of the State of New York, has, pursuant to Chapter 28 of the Consolidated Laws of the State of new York, known as the Insurance Law, issued to Atlantic Specialty Insurance Company a Certificate of Solvency and qualification to become surety or guarantor on all bonds. undertakings, recognizances. guaranties and other obligations required or permitted by law and that such certificate has not been evoked.

Notary Public

COLETTE M. BLAIKIE
Notary Public, State of New York
No.1BL4939857
Qualified in New York County
Certificate Filed in New York County
Commission Expires May 6, 2018

Partnership or Limited Liability Company

State of New York
County of New York

On this 3rd **day of** June, 2015, **before me personally appeared** Frank G. Turano, **a member of the firm of Citiva Medical, LLC to me known and known to me to be the individual described in and who executed the foregoing instrument, and he/she duly acknowledged to me that he/she executed the same as and for the act and deed of the said firm.**

Colette M. Blaikie

Notary Public,
County

COLETTE M. BLAIKIE
Notary Public, State of New York
No.1BL4989857
Qualified in New York County
Certificate Filed in New York County
Commission Expires May 6, 2016

OneBeacon
INSURANCE GROUP

Power of Attorney

KNOW ALL MEN BY THESE PRESENTS, that ATLANTIC SPECIALTY INSURANCE COMPANY, a New York corporation with its principal office in Minnetonka, Minnesota, does hereby constitute and appoint: **D. Nicholas Blaikie, Colette M. Blaikie**, each individually if there be more than one named, its true and lawful Attorney-in-Fact, to make, execute, seal and deliver, for and on its behalf as surety, any and all bonds, recognizances, contracts of indemnity, and all other writings obligatory in the nature thereof; provided that no bond or undertaking executed under this authority shall exceed in amount the sum of: **sixty million dollars ($60,000,000)** and the execution of such bonds, recognizances, contracts of indemnity, and all other writings obligatory in the nature thereof in pursuance of these presents, shall be as binding upon said Company as if they had been fully signed by an authorized officer of the Company and sealed with the Company seal. This Power of Attorney is made and executed by authority of the following resolutions adopted by the Board of Directors of ATLANTIC SPECIALTY INSURANCE COMPANY on the twenty-fifth day of September, 2012:

Resolved: That the President, any Senior Vice President or Vice-President (each an "Authorized Officer") may execute for and in behalf of the Company any and all bonds, recognizances, contracts of indemnity, and all other writings obligatory in the nature thereof, and affix the seal of the Company thereto; and that the Authorized Officer may appoint and authorize an Attorney-in-Fact to execute on behalf of the Company any and all such instruments and to affix the Company seal thereto; and that the Authorized Officer may at any time remove any such Attorney-in-Fact and revoke all power and authority given to any such Attorney-in-Fact.

Resolved: That the Attorney-in-Fact may be given full power and authority to execute for and in the name and on behalf of the Company any and all bonds, recognizances, contracts of indemnity, and all other writings obligatory in the nature thereof, and any such instrument executed by any such Attorney-in-Fact shall be as binding upon the Company as if signed and sealed by an Authorized Officer and, further, the Attorney-in-Fact is hereby authorized to verify any affidavit required to be attached to bonds.

This power of attorney is signed and sealed by facsimile under the authority of the following Resolution adopted by the Board of Directors of ATLANTIC SPECIALTY INSURANCE COMPANY on the twenty-fifth day of September, 2012:

Resolved: That the signature of an Authorized Officer, the signature of the Secretary or the Assistant Secretary, and the Company seal may be affixed by facsimile to any power of attorney or to any certificate relating thereto appointing an Attorney-in-Fact for purposes only of executing and sealing any bond, undertaking, recognizance or other written obligation in the nature thereof, and any such signature and seal where so used, being hereby adopted by the Company as the original signature of such officer and the original seal of the Company, to be valid and binding upon the Company with the same force and effect as though manually affixed.

IN WITNESS WHEREOF, ATLANTIC SPECIALTY INSURANCE COMPANY has caused these presents to be signed by an Authorized Officer and the seal of the Company to be affixed this eighth day of December, 2014.

ATLANTIC SPECIALTY INSURANCE COMPANY CORPORATE SEAL 1986 NEW YORK

By _____
Paul J. Brehm, Senior Vice President

STATE OF MINNESOTA
HENNIPEN COUNTY

On this eighth day of December, 2014, before me personally came Paul J. Brehm, Senior Vice President of ATLANTIC SPECIALTY INSURANCE COMPANY, to me personally known to be the individual and officer described in and who executed the preceding instrument, and he acknowledged the execution of the same, and being by me duly sworn, that he is the said officer of the Company aforesaid, and that the seal affixed to the preceding instrument is the seal of said Company and that the said seal and the signature as such officer was duly affixed and

SA LESHA V. S. BEEKS
Notary Public
State of Minnesota
My Commission Expires
January 31, 2020

_____
Notary Public

I, the undersigned, Assistant Secretary of ATLANTIC SPECIALTY INSURANCE COMPANY, a New York Corporation, do hereby certify that the foregoing power of attorney is in full force and has not been revoked, and the resolutions set forth above are now in force.

Signed and sealed. Dated 3rd day of June, 2015

ATLANTIC SPECIALTY INSURANCE COMPANY CORPORATE SEAL 1986 NEW YORK

This Power of Attorney expires
October 1, 2017

_____
James G. Jordan, Assistant Secretary

OneBeacon
INSURANCE GROUP

Atlantic Specialty Insurance Company

Period Ended 12/31/2014

Dollars displayed in thousands

Admitted Assets	
Investments	
Bonds	$ 1,317,645
Preferred Stocks	84,208
Common Stocks	409,904
Mortgage Loans	-
Real Estate	42,934
Contract Loans	-
Derivatives	-
Cash, Cash Equivalents & Short Term Investments	108,915
Other Investments	136,657
Total Cash & Investments	2,102,262
Premiums and Considerations Due	241,486
Reinsurance Recoverable	20,336
Receivable from Parent, Subsidiary or Affiliates	30,186
All Other Admitted Assets	156,671
Total Admitted Assets	2,550,903

Liabilities and Surplus	
Liabilities	
Loss Reserves	$ 970,868
Loss Adjustment Expense Reserves	157,992
Total Loss & LAE Reserves	1,128,860
Unearned Premium Reserve	536,239
Total Reinsurance Liabilities	34,695
Commissions, Other Expenses, and Taxes due	41,137
Derivatives	-
Payable to Parent, Subs or Affiliates	-
All Other Liabilities	88,637
Total Liabilities	1,829,368
Capital and Surplus	
Common Capital Stock	9,000
Preferred Capital Stock	-
Surplus Notes	-
Unassigned Surplus	114,522
Other including Gross Contributed	597,993
Capital & Surplus	721,515
Total Liabilities and C&S	2,550,903

State of Massachusetts
County of Norfolk ss

I, James Jordan, Assistant Secretary of Atlantic Specialty Insurance Company do hereby certify that the foregoing statement is a correct exhibit of the assets and liabilities of the said OneBeacon Insurance Company, on the 31st day of December, 2014, according to the best of my information, knowledge and belief.

Assistant Secretary

Subscribed and sworn to, before me, a Notary Public of the State of Massachusetts on this 15th day of March 2015.

Notary Public

SA LESHA V. S. BEEKS
Notary Public
State of Minnesota
My Commission Expires
January 31, 2020

FLAUM
MANAGEMENT COMPANY, INC.
DEVELOPMENT • BROKERAGE • CONSULTING

April 27th, 2015

Frank Turano
Josh Stanley
Michael Zumpano
Citiva Medical, LLC

On behalf of Flaum Management Company, Inc., we are pleased to present you with the following proposal for a Cultivation Facility at the Seneca Army Depot.

Letter Agreement

Tenant:	Citiva Medical, LLC
Premises:	20 Acres including 7 concrete pads.
Buildings:	(2) 20,000 SF Existing Metal Buildings if needed at $1.00 per SF
Option to Lease:	Tenant will be granted an exclusive Option to Lease the Premises under separate Option Agreement
Option Payments:	Landlord will waive Option Payments.
Ground Lease:	Tenant and Landlord will execute a customary Ground Lease within 30 days of the execution of this agreement.
Use:	Licensed Medical Marijuana Facility
Lease Term:	TBD
Base Rent:	$.50 per square foot of occupied space (well below market rent)
Additional Rent:	Tenant to pay real estate taxes and operating expenses for the Premises.
Options:	TBD
Option Rent:	TBD
Possession Date:	Immediately after license award
Lease Commencement	Immediately after license award
Rent Commencement	6 months after Lease Commencement
Utilities:	Responsibility of Tenant
Pre Development Work:	Landlord will assist Tenant with plans, permits and local approvals
Construction:	Landlord will provide Tenant with construction management services

AGREED: _____ AGREED: _____
Landlord Citiva Medical, LLC

LEASE

THIS LEASE (this "Lease") is made and entered into by and between **Seneca Depot, LLC** a New York limited liability company ("Lessor") and **Citiva Medical, LLC**, a New York limited liability company ("Lessee"), on June 4, 2015 (the "Effective Date").

RECITALS

A. Lessor is the owner in fee simple of certain land located at State Route 96, Town of Romulus, Seneca County, New York within the property formerly known as the "Seneca Army Depot" consisting of approximately 940.56 acres (the "Project") having a legal description provided on Exhibit A annexed hereto, including (i) that portion of the Project depicted as Phase 1 on the Site Plan (hereinafter defined) attached hereto and incorporated herein, together with all improvements now or hereafter located thereon, and easements and rights of way appurtenant (the "Initial Parcel"), and (ii) that portion of the Project generally depicted as Phase 2 on the Site Plan, together with all improvements now or hereafter located thereon and easements and rights of way appurtenant thereto (the "Phase 2 Parcel"). The Initial Parcel and the Phase 2 Parcel are shown on Exhibit B annexed hereto and incorporated herein (the "Site Plan").

B. The Lessor and Lessee now desire to enter into a lease for a term of years on the terms and conditions set forth herein.

NOW, THEREFORE, in consideration of these premises and of the mutual covenants and agreements hereinafter set forth, the parties hereto intending to be legally bound agree as follows:

ARTICLE 1.

DEFINITIONS

1.1 Additional Amounts. As defined in Section 5.1.

1.2 Additional Rent. As defined in Section 4.3.

1.3 Assignee. A Person to whom an Assignment is made.

1.4 Assignment. A transfer by Lessee of all of its rights, title, interest and obligations hereunder to all or any portion of the Premises.

1.5 Base Rent. As defined in Section 4.2.

1.6 Casualty Termination. As defined in Section 14.1.

1.7 Commencement Date. The later of (i) the date that Licenses are issued by the New York State Department of Health, and (ii) the date of delivery of the Initial Parcel to Lessee in Delivery Condition.

1.8 Environmental Statutes. All Requirements, whether now existing or hereafter enacted or promulgated, regulating, relating to or imposing liability or standards of conduct concerning any Regulated Substance or the protection of the environment, including, without limitation: (i) Comprehensive Environmental Response, Compensation and Liability Act of 1980, 42 U.S.C. Section 9601 et. seq.(known as CERCLA or Superfund) as amended by the Superfund Amendments and Reauthorization Act of 1986 (known as SARA); (ii) Solid Waste Disposal Act, 42 U.S.C. Section 6901 et seq. (known as SWDA) as amended by Resource Conservation and Recovery Act (known as RCRA); (iii) National Environmental Policy Act, 42

U.S.C. Section 4321 et seq. (known as NEPA); (iv) Toxic Substances Control Act, 15 U.S.C., Section 2601 et seq. (known as TSCA); (v) Safe Drinking Water Act, 42 U.S.C. Section 300(f) et seq. (known as Public Health Service Act, PHSA); (vi) Refuse Act, 33 U.S.C. Section 407 et seq.; (vii) Clean Water Act, 33 U.S.C. Section 1251 et seq. (known as Federal Water Pollution Control Act, FWPCA); (viii) Clean Air Act, 42 U.S.C. Section 7401 et seq. (known as CAA); (ix) The Emergency Planning and Community Right-to-Know Act of 1986, 42 U.S.C. Section 1101 et seq. (known as EPCRTKA); (x) the Occupational Safety and Health Act, 29 U.S.C. Section 651 et seq. (known as OSHA); and (xi) any similar statute of the State of New York.

1.9 Expiration Date. As defined in Section 3.1.

1.10 Force Majeure Events. As defined in Section 26.1.

1.11 Governmental Authorities or any one a Governmental Authority. The United States of America, the State of New York, Seneca County, Town/Village of Romulus and any agency, department, commission, board, bureau, quasi-governmental authority, instrumentality or political subdivision of any of the foregoing, now existing or hereafter created, or otherwise having jurisdiction over the Premises, the Improvements or any portion of either.

1.12 Improvements. As defined in Section 8.1.

1.13 Interest Rate. A rate of interest equal to the greater of: (i) Prime Rate plus two percent (2%) per annum or (ii) eight percent (8%) per annum, but in no event in excess of the maximum permissible rate then in effect in the State of New York

1.14 Lease Year. In the case of the first (1st) Lease Year, the period following the Commencement Date until December 31 of that year and in the case of subsequent Lease Years, the twelve (12) calendar month period following each Lease Year based on a calendar fiscal year.

1.15 Leasehold Estate. Collectively, (i) all right, title and interest of Lessee in, to and under this Lease, and (ii) all right, title and interest of Lessee in, to and under the Premises and Improvements for the Term.

1.16 Leasehold Mortgagor. Lessee or any other mortgagor of a Leasehold Estate created by this Lease.

1.17 Lessee's Construction. As defined in Section 8.2.

1.18 Lessee's Policies. As defined in Section 13.10.

1.19 Lessee's Work. As defined in Section 8.12.

1.20 License. A license from the New York State Department of Health as a registered organization under Chapter XIII, Part 1004 of Title 10 (Health) of the Official Compilation of Codes, Rules and Regulations of the State of New York (as may be amended and together with any enabling rules and regulations and any successor statute and rules and regulations thereunder, the "NY Medicinal Marihuana Law").

1.21 Losses. As defined in Section 12.1.

1.22 Material Default. As defined in Section 22.2(d).

1.23 Owner. As defined in Section 8.14.

1.24 Option. As defined in Section 29.

1.25 Permitted Mortgage. Any mortgage, deed of trust, agreement for sale or other security device creating a first lien on Lessee's Leasehold Estate, a true and complete copy of which has been properly delivered to Lessor.

1.26 Permitted Mortgagee. The holder of a Permitted Mortgage.

1.27 Permits. As defined in Section 8.7.

1.28 Person. An individual, corporation, limited liability company, partnership of any type, joint venture, estate, trust, unincorporated association, other entity and all Governmental Authorities

1.29 Personal Property. As defined in Article 15.

1.30 Premises. The Initial Parcel, as may be expanded to include all or any part of the Phase 2 Parcel pursuant to Section 29 below, together with all rights and easements appurtenant thereto as expressly granted by this Lease, all existing and future Improvements, temporary or portable structures, and personal property located on, below or above the same.

1.31 Prime Rate. The Prime Rate of interest published as the consensus prime rate by The Wall Street Journal or any successor publication. If the Prime Rate shall cease to be published, the Prime Rate shall equal the equivalent rate announced from time to time by the New York based bank holding the most deposits at the end of the preceding calendar year.

1.32 Regulated Substance. As defined in Section 12.3

1.33 Rent. As defined in Section 4.1.

1.34 Rent Commencement Date. The date that is six (6) months from the Commencement Date.

1.35 Requirements. Any and all applicable now existing or hereafter enacted or promulgated federal, state, town, village, county and municipal laws, rules, orders, judgments, ordinances, regulations, statutes, requirements, permits, consents, certificates, approvals, codes and executive orders.

1.36 Sublease. A transfer by Lessee of less than all of its rights, title, interest and obligations hereunder to all or any portion of the Premises. Any further Assignments or Subleases made by Sublessees shall also be included within the meaning of the term Sublease.

1.37 Sublessee. The lessee under a Sublease.

1.38 Taxes. Real property taxes and assessments including but not limited to all ad valorem taxes, property tax assessments, special assessments or district charges levied or assessed by any lawful authority against land or improvements. Taxes shall not include Federal, state, county or municipal taxes, death taxes, excess profit taxes, franchise or any taxes imposed or measured on or by the income or revenue of Lessor from Lessor's operation of the Premises or the Project or any portion thereof or imposed in connection with any change of ownership of the Premises, the Project or any portion thereof. Taxes will not include any income or franchise taxes, capital stock, inheritance, estate, gift, or any other taxes imposed upon or measured by Lessor's gross income or profits or Lessor's business license taxes or fees.

1.39 Term. A period of approximately five (5) years commencing on the Commencement Date and ending on the Expiration Date subject to extension as provided in Article 3 below.

1.40 Town/Village. Town of Romulus.

ARTICLE 2.
PREMISES

2.1 Lease Grant. Lessor does hereby demise and lease to Lessee, and Lessee does hereby lease and take from Lessor the Premises, together with all easements, appurtenances and other rights and privileges now or hereafter belonging or appertaining to the Premises.

ARTICLE 3.
TERM

3.1 Commencement, Expiration. The Term of this Lease shall be for a period equal to the Term beginning on the Commencement Date and ending at 11:59 p.m. on the last day of the month that is sixty (60) full calendar months thereafter (the "Expiration Date"), unless sooner canceled or terminated as provide herein provided that Lessee shall have the right to extend the term of this Lease two (2) times for periods of sixty (60) calendar months each by notice to Lessor thereof no later than the end of the otherwise applicable Expiration Date.

Notwithstanding the foregoing, if Lessor fails to so deliver the Premises in the manner required by this Lease within thirty (30) days of Lessor's notice to Lessee of the receipt of the License, Lessee shall be entitled to an abatement of rent equal to the daily Fixed Rent applicable to the Premises based on the Rent payable commencing upon the Rent Commencement Date. Additionally, in the event of such failure of delivery, Lessee, at its option, shall be entitled to take possession of the Premises and perform Lessor's Obligations at Lessor's cost and expense, the costs thereof to be reimbursed (or paid directly) by Lessor within fifteen (15) days of demand from Lessee thereof and the Commencement Date shall not be deemed to have occurred until the completion of Lessor's Obligations by Lessee. If Lessor fails to so timely make such payments or reimbursement, Lessee shall be entitled to offset such amounts against rent otherwise due under this Lease.

If the Licenses are issued by the New York State Department of Health but same shall not be issued to Lessee (or if no Licenses are issued) within five (5) months of the Effective Date, Lessee shall be entitled to terminate this Lease by notice to Lessor thereof. If no License is issued to Lessee on or before December 31, 2015, this Lease shall be automatically terminated. Lessee's obligation to reimburse Lessor pursuant to Section 9.1 below, as applicable, shall survive any such termination.

3.2 Termination. Notwithstanding the provisions of Section 3.1, this Lease shall terminate and be of no further force or effect at Licensee's option by notice from Lessee to Lessor specifying the date of termination delivered at any time during the first five (5) months following the Effective Date if Lessee does not obtain (despite using commercially reasonable efforts to obtain) the necessary governmental permits and approvals required by Lessee to construct the improvements required by Lessee to utilize the Initial Parcel as a manufacturing facility for medical marihuana products in accordance with the NY Medicinal Marihuana Law (the "Permits"). Lessee's obligation to reimburse Lessor pursuant to Section 9.1 below, as applicable, shall survive any such termination.

3.3 Delivery Condition. "Delivery Condition" shall mean vacant, free of all claims of tenancies, broom-clean, Lessor's Obligations set forth in Section 9.1 below fully performed.

ARTICLE 4.
RENT

4.1 Rent. From and after the Rent Commencement Date Lessee shall pay to Lessor rent, including, without limitation, Base Rent, Additional Rent and Additional Amounts, to Lessor pursuant to the terms and provisions of this Article 4 (collectively, "Rent").

4.2 Base Rent. Lessee shall pay Lessor an annual minimum base rent of Ninety Thousand Dollars (90,000) payable in equal and consecutive monthly installments of $7,500 per month commencing on the Rent Commencement Date except that for the first through twelfth full calendar months following the Rent Commencement Date, inclusive, the monthly installments shall be increased by $5,000 per month for a total monthly amount for such twelve (12) month-period only of $12,500.00 for the Initial Parcel. Such amounts (the "Base Rent") shall be due and payable in monthly amounts as provided in the foregoing sentence no later than the first day of each month. In the event Lessee exercises an Option for any of the Pads comprising the Phase 2 Parcel pursuant to Article 29 below, the parties agree that (i) the definition of Premises shall be automatically modified to incorporate such Pad as provided in Article 29 upon delivery of same in Delivery Condition, and (ii) the Base Rent shall increase subject to the terms of said Article 29 of this Lease.

4.3 Due Date. Lessee shall pay the Rent described herein without offset or deduction, except as expressly provided

herein, and without notice or demand. The Base Rent due for any period of less than a full Lease Year, and any installment of the Base Rent due for any period of less than a full month, and any Additional Rent due for an operating period which does not equal a full Lease or calendar year, shall be appropriately apportioned, based on a year of twelve (12) thirty (30) day months. All Rent shall be payable in immediately available funds which at the time of payment is legal tender for payment of public and private debts in the United States of America. Lessee shall pay Rent by wire transfer to the account of Lessor pursuant to wire instructions provided by Lessor from time to time. Lessor may change the place or manner for delivery of Rent payments upon thirty (30) days written notice to Lessee.

4.4 Notice of Default. If by the due date for the payment of such Rent, Lessor has not received the payment which has become due and payable, Lessor may, but has no obligation to, deliver to Lessee written notice demanding that within ten (10) days thereafter, Lessee pay such Rent, together with late payment charges and interest as described in Sections 4.5 and 4.6

4.5 Interest. There shall be added to any Rent payment which has become due and payable but has not been paid, interest at the Interest Rate from and after the tenth (10th) day following the date that Lessor has notified Lessee that the Rent payment was not made when same became due.

4.6 Late Charge. In addition to the interest required by Section 4.6, a late charge in the amount of two percent (2%) of the Rent payment due shall be added to any Rent payment not paid within thirty (30) days of notice that same was not made when due. Lessee acknowledges that such amount is not a penalty but is intended to compensate Lessor for time and internal collection efforts associated with any such late payment.

ARTICLE 5.
ADDITIONAL AMOUNTS

5.1 Additional Amounts. From and after the Rent Commencement Date, and in addition to the Base Rent, Lessee shall also pay or cause to be paid for any particular tax year during the Term of this Lease, Taxes with respect to the Premises in excess of the Taxes with respect to the Premises for the 2014 / 2015 tax year (the "Excess Tax Payment"). Such excess and all other costs, expenses payable by Lessee under this Lease to Lessor are hereinafter referred to individually and collectively as either "Additional Rent" or "Additional Amounts". The Excess Tax Payment shall take into account any reduction or rebate in Taxes applicable to the Premises and any amounts paid prior to such reduction or rebate or otherwise taking same into account shall be promptly refunded to Lessee. Notwithstanding, Lessee's obligation to pay such Excess tax Payment to Lessor, Lessor shall timely pay to the municipality all Taxes with respect to the Premises, any portion of the Phase 2 Parcel not leased by Lessee and all other portions of the Project. Lessor shall keep same free and clear of any liens other than the lien of a mortgagor pursuant to Section 20.1 hereof. At Lessee's option, Lessor shall use commercially reasonable efforts, at Lessor's cost, to cause the Premises to be segregated from the remainder of the Project for purposes of the assessment of Taxes. At any time, Lessor shall be entitled, at its cost, to so segregate the Premises from the remainder of the Project.

During such time as the Premises shall not be taxed or assessed separately from any other portion of the Project for the purposes of assessing Taxes, the Excess Tax Payment shall be based on the ratio of the ground area of the Premises to overall ground area of the Project (or the portion thereof included in such taxation or assessment).

If Lessee shall become aware that the Premises (or any portion of the Phase 2 Parcel) is being sold at a tax sale due to Lessor's delinquent payment of Taxes thereon, and if Lessee shall pay the delinquent Taxes in order to prevent such sale, then, Lessee may deduct the following amounts from rent and other charges due hereunder: (i) an amount equal to the Taxes, interest, and penalties so paid by Lessee; (ii) all reasonable charges (including reasonable attorneys' fees) incurred by Lessee in preventing such sale; and (iii) interest on all of the foregoing at the rate of 10% per annum from date of payment.

Lessor shall use commercially reasonable efforts to make good faith dispute of tax assessments of the Premises and if Lessor shall fail to do so after written notice from Lessee to Lessor and a reasonable opportunity to cure, Lessee may do so on Lessor's behalf. Additionally, Lessee may dispute any increase in Taxes on its improvements or the Premises. Lessor shall give Lessee the necessary authority to so challenge any such assessment, and Lessee shall bear the full cost and expense of any such challenge with respect to Lessee's

improvements and Lessee's pro rata share of the applicable tax parcel with respect to a challenge with respect to the land.

Lessee may apply for real estate tax benefits granted under Section 485-b of the New York Real Property Tax Law (the "485-b Exemption") as they apply to the Premises. All benefits received from approved Lessee application(s), will be passed on to Lessee. Lessor will cooperate with Lessee's efforts in obtaining any real estate tax exemptions available to the Premises, including but not limited to the 485-b Exemption and shall execute any application(s) for such benefits at Lessee's request.

During the Term, Lessee, at its sole cost and expense, shall pay or cause to be paid directly to the provider all charges for gas, electricity, light, heat, power, telephone, cable or other communication service, and any other utilities rendered or supplied upon or in connection with the Premises.

5.2 Payment. Lessee shall pay or cause to be paid all Additional Amounts within thirty (30) days of written demand by and before any interest, penalty, fine or cost accrues for nonpayment, provided, however that if any Additional Amounts may by law be paid in installments, Lessee may pay such Additional Amounts in installments together with applicable interest thereon. Such installments may not extend past the Expiration Date. Lessee shall pay all such installments and any applicable interest at the time they become due and before any further penalty or fine may be added thereto.

5.3 Evidence. Within a reasonable period after Lessee receipt of Lessor's written request, Lessee shall furnish to Lessor pertinent official receipts or other proof reasonably satisfactory to Lessor evidencing the payment of any Additional Amounts before the same become delinquent.

5.4 Taxes. Lessor shall have no liability to Lessee for ad valorem or other taxes of any kind assessed against Lessee's Leasehold Estate or Improvements.

ARTICLE 6.
USE OF THE PREMISES AND PREMISES

6.1 Uses. The Premises may be used as a licensed medical marihuana facility under New York State law once the License is obtained and the Premises may otherwise be used for any purpose permitted by applicable law, rule or regulation.

6.2 Zoning. Lessee agrees to abide by the applicable provisions of any zoning regulations applicable to the Premises and Improvements and other applicable Village/Town land use ordinances.

6.3 Waste Lessee shall not conduct or permit to be conducted any public or private nuisance on the Premises, nor commit or permit to be committed any waste thereon.

6.4 Conformity to Law. Lessee shall maintain the Premises in a clean and safe condition. Subject to Section 6.7, below Lessee shall not use or permit the Premises to be used or occupied at any time during the Term in any manner that is not in full conformity with all applicable regulations. Subject to Section 6.7 below, Lessee promptly shall at all times comply with all applicable Requirements with respect to the Premises, including, without limitation, the condition, maintenance, use, operation, occupation, improvement and alteration of the Premises, without regard to the nature or cost of the work required to be done, extraordinary, as well as ordinary, of any Governmental Authority, and of any and all of their departments and bureaus of any applicable Fire Rating Bureau or other body exercising similar functions, affecting the Premises, or any street, avenue or sidewalk comprising a part thereof in or under the same, or requiring the removal of any encroachment, or affecting the construction, maintenance, use, operation, management or occupancy of the Premises, whether or not the same involve or require any structural changes or additions in or to the Premises without regard to whether or not such changes or additions are required on account of any particular use to which the Premises, or any part thereof, may be put, and without regard to the fact that Lessee is not the fee owner of the Premises. Lessee also shall comply with any and all provisions and requirements of any casualty, liability or other insurance policy required to be carried by Lessee under the provisions of this Lease. Lessee shall not permit any extra hazardous business, use or purpose to occur on or about the Premises. Lessee shall promptly provide Lessor written notice of (i) Lessee's obtaining knowledge of any release of any Regulated Substance on, in, under or from the Premises; (ii) Lessee's receipt of any notice to such effect from any Governmental

Authority; and (iii) Lessee's obtaining knowledge of the incurring of any expense or loss by such Governmental Authority or by any other Person in connection with the assessment, containment or removal of any Regulated Substance for which expense or loss Lessee may be liable, in whole or in part, or for which expense or loss a lien may be imposed on the Premises. If Lessee desires to contest the validity or applicability of any Requirement other than as set forth specifically in the Lease, including without limitation, Section 11.1, Lessee, at its sole cost and expense, may carry on such contest, provided that non-compliance shall not constitute a crime or expose Lessor or the Premises to any penalty, fine, liability or expense.

6.5 Quiet Enjoyment. Lessor warrants that Lessee shall quietly have, hold and enjoy the Premises during the Term of this Lease so long as Lessee is not in default (*i.e.*, any required notice having been given and any applicable cure period having expired) under this Lease. If at any time there is a material breach or default of any of Lessor's representations or warranties under Section 20.2 and if for that reason Lessee shall be materially deprived of or impaired in the use and enjoyment of the Premises as herein provided, Fixed Rent and additional charges to be paid by Lessee shall be equitably abated during any such period.

6.6 Surrender. Lessee shall peaceably surrender possession of the Premises upon the Expiration Date or earlier termination of this Lease. Upon the expiration or earlier termination of this Lease, fee title to the Premises, including, without limitation, all Improvements, shall vest in Lessor free and clear of any liens or encumbrances of any type other than those created by Lessor without any obligation by Lessor to pay any compensation therefor to Lessee. Nothing herein shall prevent Lessee from removing its trade fixtures or personal property from the Premises.

6.7 **Specific Use. Notwithstanding anything contained herein to the contrary, Lessor acknowledges (a) that (i) Lessee will be engaged in activities that are considered to be unlawful under federal laws relating to controlled substances; and (ii) although the State of New York has adopted an overall regulatory framework that permits Lessee's proposed activities on the Premises, the regulatory framework is still evolving and that Lessee's failure to comply with New York laws and regulations relating to controlled substances shall not constitute a violation of this Lease to the extent that such laws and regulations (A) conflict with other applicable New York laws and regulations, and (B) are ambiguous, unclear or incomplete. In addition, Lessor acknowledges that Lessor's rights and remedies under this Agreement are subject to the provisions of the NY Medicinal Marihuana Law. To the extent that there is conflict between the terms of this Lease and the applicable provisions of NY Medicinal Marihuana Law, the NY Medicinal Marihuana Law shall govern.**

ARTICLE 7.
EASEMENTS

7.1 Easements. At Lessee's election and without further consent of Lessor, Lessee may, from time to time, create private, exclusive or non-exclusive easements over, under, upon and across the Premises for roadway, access, drainage and utilities, including, without limitation, water, power, gas, electric, sewer, telephone, cable television and other communications with Lessor's consent, not to be unreasonably withheld, conditioned or delayed (and provided that no such consent shall be required if such easements shall, on their terms, be of no force and effect upon the termination of this Lease).

ARTICLE 8.
CONSTRUCTION AND IMPROVEMENTS

8.1 Definition. All buildings, fixtures, streets, curbs, sewers, drainage and flood control structures, sidewalks, fences, utilities, landscaping, signs and other structures or improvements of every kind and nature which exist, at any time, and any and all alterations, replacements, additions, upgrades or substitutions relating thereto on, above and below the Premises or a portion thereof are considered "Improvements" under this Lease.

8.2 No Liens. Lessee covenants and agrees to pay for all work, labor and materials, and all expense whatsoever in connection with the performance of alterations or improvements performed by Lessee ("Lessee's Construction" and agrees to keep and hold Lessor fully harmless against all mechanic's, furnisher's or other liens and claims of every kind, which may arise out of or be based upon any such work, construction, removal of improvements, or any alterations, repairs or maintenance. In the event that any such lien is filed against the Premises or against Lessee's Leasehold Estate under this Lease by, through or under Lessee, then the Lessee shall, within sixty (60) days from the date that Lessee has knowledge that the lien is filed, either: (1) pay the claim and cause the lien to be removed from the Premises and/or the Leasehold Estate of Lessee under this Lease, (2) post a bond in amount sufficient to protect the Premises from the enforcement of any such lien, or (3) furnish security in an amount sufficient to cause the lien to be removed from the Premises and/or the Leasehold Estate of Lessee under this Lease. Nothing herein shall prevent Lessee from obtaining a leasehold mortgage or from financing its improvements personal property at the Premises and Lessor shall reasonably cooperate with Lessee in connection therewith including, without limitation, executing reasonably documentation requested by Lessee.

8.3 Ownership. All Improvements constructed by Lessee shall be the property of Lessee or any successor-in-interest ("Owner") and shall, unless and until they become the property of Lessor as herein specifically provided, Owner shall be responsible for all ad valorem taxes related to the Improvements.

8.4 Subleases. In connection with any Sublease or Assignment actually approved by Lessor, Lessee may sell all of its rights, title and interest in and to any and all Improvements and may allow Sublessees or Assignees to construct Improvements subject to the terms and provisions contained herein, in which event the party which so purchases or constructs such Improvements, and its successors and assigns, shall thereafter be deemed to be the Owner of such Improvements and shall be subject to the requirements, and enjoy the benefits, of this Lease as to such Improvements.

8.5 Appraisal. If the value of the Improvements must be determined by appraisal, said appraisal shall consider the condition and current value of the Improvements and their suitability for uses ordinarily made of the lands on which the Improvements are located at the time of the appraisal.

8.6 Removal. Notwithstanding anything set forth herein to the contrary, the Owner of the Improvements shall have the right, from time to time, to remove or demolish all or any part of such Improvements on the Premises which have been damaged or become obsolete or for any other reason; provided, however, that Lessee shall continue to be obligated to pay Rent as set forth herein and that upon the expiration of this Lease, in the event any Improvements have been removed or demolished, Lessor shall return the Premises to Lessor in the condition required under Section 27.1.

8.7 Cooperation. Lessor agrees to execute or join in the execution of any documents or instruments that may be reasonably required by Lessee and/or third parties, including, but not limited to, governmental authorities, for the development, use and enjoyment of the Premises. Without limitation, such documentation may include (to the extent required in this matter): (i) changes or variances required by governmental authority, (ii) building permits, variances, use permits, licenses, approvals or similar governmental authorizations, and (iii) other like matters. Notwithstanding the foregoing, Lessee shall be responsible for any payments to governmental agencies related to this Section 8.7 (other than as required with respect to Lessor's Obligations which shall be at Lessor's sole cost and expense).

ARTICLE 9.
REPAIRS AND MAINTENANCE

9.1 Lessor's Obligations. Prior to the Commencement Date as to the Initial Parcel (and prior to any Pad being deemed added to the Premises pursuant to Lessee's Option pursuant to Section 29 below), Lessor shall, at Lessor's cost and expense, cause (i) such Premises to have all utilities including water, electricity and sewage services at a location on the Initial Parcel (or applicable Pad) as shown on the Site Plan (or as may be reasonably agreed by the parties), operable and separately billed with respect the Initial Parcel (and/or the applicable Pad be added to the Premises) , (ii) the building pad(s) on the Initial Parcel (and any applicable Pad) to be power-washed, smoothed, sealed, and warehouse ready with flatness levels as described in the Site Plan or otherwise agreed to by the parties, and other structures on the Initial Parcel (or the applicable Pad), if any, demolished and all debris removed unless Lessee directs otherwise by notice to Lessor, (iii) a roadway to be in place servicing the Premises for vehicular use from NYS Route 96 at the entrance of the Seneca Army Depot to

the Premises (collectively, the "Lessor's Obligations").

Prior to Lessee obtaining the License, Lessor shall not be obligated to undertake any of Lessor's Obligations other than clearing the pads on the Initial Parcel and power-washing same if so directed in writing by Lessee (the "Pre-License Work"). If this Lease is terminated by Lessee pursuant to Section 3.1 above, Lessee shall reimburse Lessor for the reasonable third party costs and expenses reasonably incurred in any such performance of the Pre-License Work until this Lease is so terminated.

If after Lessee shall have received the License, Lessee notifies Lessor in writing that Lessee shall desire that the remaining Lessor's Obligations with respect to the Initial Parcel (or any portion of such remaining Lessor's Obligations specified in such notice) be commenced prior to the Lessee's receipt of all Permits (the "Commencement Notice"), Lessor shall provide Lessee with a good faith estimate of the cost of such remaining Lessor's Obligations (or the specified portion thereof) and, if Lessee shall approve such estimate in writing, Lessor shall commence and diligently prosecute the completion of such Lessor's Obligations and, if Lessee terminates the Lease pursuant to Section 3.2 above, Lessee shall reimburse Lessor for the third party costs and expense reasonably incurred in the performance of such Lessor's Obligations incurred after delivery of Lessee's Commencement Notice and until this Lease is so terminated in an amount not to exceed the aforesaid approved estimate and for any reasonable third party costs and expenses reasonably incurred in any performance of the Pre-License Work until this Lease is so terminated, if applicable.

9.2 Repair. After the Effective Date and during the Term, Lessee, at its sole cost and expense, shall maintain and repair the following components of the Premises: the structure and exterior façade of the Improvements, all base building fixtures, equipment and systems, all base building common areas, and all public and other improvements outside of the buildings comprising the Improvements. Lessee shall not permit any physical waste to the Premises, and shall, except as provided herein, and at Lessee's sole cost and expense. Lessee shall maintain all portions of the Premises in a clean, neat and orderly condition, free rubbish, snow, ice and unlawful obstructions. Lessor at Lessor's expenses shall maintain the accessways from the Premises to and including the access to the public roadway and all Pads (prior to the Lessee leasing any such Pad pursuant to Section 29 below) in a clean, neat and orderly condition, free of rubbish, snow, ice and unlawful obstructions. Lessee shall reimburse Lessor for 50% of the reasonable third party cost for Lessor keeping the roadway exclusively servicing the Premises for vehicular use to and from NYS Route 96 (as shown on the Site Plan) free of rubbish, snow and ice. Lessee shall comply with, or it shall cause to be complied with, all requirements of Lessee's policies of public liability, fire or other insurance at any time in force with respect to the Premises.

9.3 No/Services. Except as specifically provided in this Article 9 or otherwise in this Lease, and notwithstanding any other provision in this Lease, Lessor shall not be required to furnish any services or facilities or to make any repairs, alterations, replacements or improvements whatsoever in or to the Premises. Lessee hereby assumes the full and sole responsibility for the condition, operations, repair, replacement, and maintenance and management of the Premises including, without limitation, all Improvements.

ARTICLE 10.
LIENS

10.1 Payment; Indemnity. Lessee shall be responsible for payment of all costs and charges for any work done by or for it on the Premises or in connection with Lessee's occupancy thereof, and, subject to the provisions of Section 10.2, Lessee shall keep the Premises free and clear of all mechanics' liens and other liens and encumbrances on account of work done for or authorized by Lessee or Persons claiming under it or bond over such liens according to state law. Lessee expressly agrees to and shall indemnify and hold Lessor harmless against liability, damages, costs, attorneys' fees and all other expenses or loss on account of claims of lien or other encumbrances of laborers or material men or others for work performed or materials or supplies furnished for or authorized by Lessee or Persons claiming under it.

10.2 Release; Contest. If, because of any act or omission (or alleged act or omission) of Lessee, any mechanics', materialmen's or other lien, charge or order for the payment of money shall be filed or recorded against the Premises or against Lessor (whether or not such lien, charge or order is valid or enforceable as such), Lessee shall, at its own expense, cause the same to be released and discharged of record within sixty (60) days after Lessee shall have received notice of the filing or recording thereof, or Lessee may, within said period, in the case of mechanics' or materialmen's liens, furnish to Lessor a bond, letter of credit or other instrument

reasonably satisfactory to Lessor against any other lien, charge or order, in which case Lessee shall have the right in good faith to contest the validity or amount thereof.

10.3 Notice. Should any claims of lien or other encumbrances be filed against the Premises or any action purporting to affect the title to the Premises be commenced, the party receiving notice of such lien or action shall immediately give the other party written notice thereof.

ARTICLE 11.
CONTESTS

11.1 Lessee Right to Contest. Notwithstanding anything contained herein to the contrary, after written notice to Lessor, Lessee may contest by appropriate legal proceedings, conducted in good faith and with due diligence, the amount, validity or application, in whole or in part, of any Imposition, Requirement, lien, encumbrance, charge or any other adverse claim against the Premises provided that: (a) the fee interest of Lessor shall not thereby be encumbered in any manner (or, if encumbered, such fee interest is adequately protected by a bond or similar security ensuring payment of the disputed item in the event Lessee's protest is unsuccessful); (b) such proceeding shall operate to suspend the collection of any fine, fee, charge, assessment or Imposition from Lessor and the Premises; and (c) Lessor shall not thereby become subject to any civil or criminal liability whatsoever for Lessor and Lessee's failure to comply.

ARTICLE 12.
INDEMNIFICATION

12.1 Losses. Lessee hereby expressly agrees to indemnify and hold Lessor and its officers, directors, and employees (collectively, the "Indemnitees") harmless, or cause Lessor to be indemnified and held harmless, from and against all liabilities, obligations, damages, penalties, claims, causes of action, costs, charges and reasonable expenses, including reasonable attorneys' fees and costs (collectively "Losses"), which may be imposed upon or incurred by or asserted against Lessor after the Effective Date by reason of the following:

(a) any accident, injury (including death at any time resulting therefrom) or damage to any Person or property occurring in or on the Premises or any part thereof or in, or about any sidewalk or vault;
(b) any failure on the part of Lessee to perform or comply with any Requirements or with any of the covenants, agreements, terms or conditions contained in this Lease on its part to be performed or complied with (after accounting for any notice and cure period);
(c) any lien or claim which may have arisen out of any act of Lessee or any agent, contractor, servant or employee of Lessee against or on the Premises or any lien or claim created or permitted to be created by Lessee in respect of the Premises against any assets of any of the Indemnitees under the laws of the State of New York or of any other Governmental Authority or any liability which may be asserted against any of the Indemnitees with respect thereto;
(d) any failure on the part of Lessee to keep, observe and perform any of the terms, covenants, agreements, provisions, conditions or limitations contained in any contract for construction of Improvements at the Premises or in connection with any Subleases, on Lessee's part to be kept, observed or performed;
(e) any right to contest by Lessee expressly permitted pursuant to the provisions of this Lease;
(f) any action taken by any Person or Governmental Authority pursuant to any Environmental Statute or under common law, pertaining to Regulated Substances, or in any manner arising out of or related to the presence, use, generation, storage, disposal or transport of any Regulated Substance or environmental contaminants found in, on or under, affixed to or emanating from the Premises as a result of any act or omission of Lessee, provided, however, such indemnity shall not relate to any pre-existing environmental condition or any environmental condition caused by Lessor; or the condition of any Improvement or any part thereof.

Lessee agrees to indemnify Lessor for any such Losses except such matters caused by or resulting from Lessor's negligence, willful or intentional misconduct or from Lessor's violation (after applicable notice or cure period) of the express terms or conditions of this Lease.

Except to the extent that such liability is caused by the negligence or willful misconduct act or omission of Lessees, Lessor shall defend, indemnify and hold Lessee harmless from all costs, expenses, claims or demands of whatever nature (including, without limitation, reasonable attorneys fees and costs) arising from the following: (i) any willful, negligent or tortious act or omission on the part of Lessor, its agents, contractors, or employees; or (ii) any failure on the part of Lessor to perform or comply with any of the covenants, agreements, terms, provisions, conditions or limitations contained in this Lease on its part to be performed or complied with. In case any action or proceeding is brought against Lessee by reason of any such claim, Lessor, upon written notice from Lessee, shall, at Lessor's expense, resist or defend such action or proceeding.

12.2 Defense. In case any action or proceeding is brought against Lessor by reason of any such occurrence, Lessee, upon Lessor's request and at Lessee's expense, will resist and defend such action or proceeding, or cause the same to be resisted and defended, either by legal counsel designated by Lessee or, where such occurrence is covered by liability insurance, by legal counsel designated by the insurer if so required by such insurer, in each case subject to Lessor's reasonable approval of such counsel.

12.3 Environmental Damage. In addition to the indemnification contemplated by Section 12.1, Lessee hereby agrees to and does indemnify and hold Lessor harmless from and against any and all liability, obligations, losses, damages, penalties, claims, environmental response and cleanup costs and fines, and actions, suits, costs, taxes, charges, expenses and disbursements, including reasonable legal fees and expenses of whatsoever kind or nature (collectively, "claims" or "damages") imposed on, incurred by or reserved against Lessor in any way relating to or arising out of the existence or presence of any "Regulated Substance," as defined herein, on, under or from the Premises from and after the Effective Date, and any claims or damages in any way related to or arising out of the removal, treatment, storage, disposition, mitigation, cleanup or remedying of any Regulated Substance on the Premises.

For the purposes of this Lease, the term "Regulated Substance" shall include but not be limited to substances, materials or chemicals defined as regulated substances, hazardous waste, hazardous materials, toxic substances, dangerous waste, radioactive material, medical waste, biohazardous or infectious waste, pollutants, toxic pollutants, toxic waste, herbicides, fungicides, rodenticides, insecticides, contaminants, or pesticides or special waste in any relevant Environmental Statute and any material, waste or substance that is explosive, radioactive, asbestos containing, a hydrocarbon, a polychlorinated biphenyl, lead, urea formaldehyde, radon gas or petroleum, petroleum-based or petroleum derived products. This indemnification shall include, without limitation, claims or damages arising out of any violations of any Environmental Statute. The foregoing environmental indemnity shall survive the expiration or termination of this Lease and/or any transfer of all or any portion of the Premises and shall be governed by the laws of the State of New York.

In the event any such action or claim is brought or asserted against Lessor, Lessee shall have the right, subject to the right of Lessor to make all final decisions, (a) to participate with Lessor in the conduct of any further required cleanup, remove or remedial actions and/or negotiation and defense of any claim indemnifiable under this environmental indemnity provision, having reasonable regard to the continuing conduct of the operation/business located on the Premises and (b) to participate with Lessor in negotiating and finalizing any agreement or settlement with respect to any such claim or cleanup.

Lessee agrees to provide Lessor with copies of all information it receives or obtains regarding the environmental condition of the Premises, including, but not limited to, any environmental audits Lessee may conduct on the Premises

12.4 Discovery of Regulated Substances. If Lessee discovers any Regulated Substance on the Premises and such Regulated Substance existed on the Premises prior to the Effective Date, and the existence of such Regulated Substances materially and substantially affects Lessee's ability to use the entire Premises, Lessee may surrender the entire Premises to Lessor and terminate this Lease. Alternatively, Lessee shall have the right to take appropriate remedial action with respect to the Regulated Substance, including, but not limited to, defending any claim arising out of, or related to, the existence of the Regulated Substance on the Premises and carrying out any required clean-up. In no event shall Lessor have any liability or obligation relating in any manner to any such Regulated Substances or the remediation thereof. Lessee acknowledges that it has had the opportunity to conduct environmental assessments and soil analysis as part of its due diligence prior to execution of this

Lease and is satisfied with the results of its assessments.

12.5 Lessor's Obligations. Lessor covenants that during the Lease Term, Lessor shall comply with all Environmental Statutes in and around the Project. Lessor hereby represents and warrants to Lessee that, to Lessor's actual knowledge: (i) as of the date of execution of this Lease, Lessor has received no written notice from any applicable governmental authorities that the Premises and the land subject to options hereunder (the "Entire Premises") or the Project contain any Regulated Substances in violation of existing applicable Environmental Statures, which violation has not been corrected; and (ii) without duty of investigation or inquiry, as of the date of execution of this Lease, the Entire Premises and the Project do not currently contain any Regulated Substances in violation of existing applicable Environmental Statures. Lessor shall be solely responsible for, and shall indemnify, defend (at Lessor's expense with counsel reasonably approved by Lessee), reimburse, and hold Lessee harmless from and against the cost of testing and remediation of any Regulated Substances to the extent any such Regulated Substances are (A) existing in or on the Entire Premises as of the Commencement Date in violation of applicable Environmental Statures as of such date, and/or (B) resulting from Lessor bringing upon, keeping, releasing or using any Regulated Substances in or on the Entire Premises or the Project in violation of any applicable Environmental Statures in existence as of the date such Regulated Substances are brought upon, kept or used by Lessor. As part of such indemnification, if Lessee notifies Lessor or Lessor otherwise discovers any such Regulated Substances existing in or on the Entire Premises or the Project at any time during the Lease Term which are Lessor's responsibility to remediate pursuant to the foregoing provisions of this Section 12.5, then Lessor shall, at Lessor's cost, promptly take and diligently prosecute to completion all necessary steps to test and remediate such Regulated Substances as and when required by and in compliance with applicable Environmental Statures, and in such manner so as to minimize any unreasonable disturbance of or interference with Lessee's conduct of business in the Premises.

ARTICLE 13.
INSURANCE

13.1 Liability. Lessee, at its expense, shall at all times during the Term as of or following Lessor taking possession of all or any part of the Premises (the "Possession Period"), maintain (or cause to be maintained) in full force broad form commercial general liability insurance, which insures Lessee and Lessor against liability for injury to persons and property, and death of any Person occurring in, on, or about the Premises, or arising out of Lessee's development, construction, maintenance, and use of occupancy thereof. All commercial general liability policies shall contain a provision that Lessor shall be entitled to recover under the policies for any loss occasioned to it, its Affiliates, servants, agents and employees by reason of the negligence or wrongdoing of Lessee, its servants, agents and employees, sublessees, concessionaires or permittees. Further, the policies shall provide that their coverage is primary over any other insurance coverage available to Lessor, its Affiliates, servants, agents and employees. Further, Lessee shall cause any contractor involved in the construction of the Improvement to add Lessor to its liability insurance coverage as additional insured.

13.2 Amounts. The insurance shall afford protection of not less than $1,000,000.00 in combined single limits for bodily injury and property damage and each liability policy shall be written on an occurrence. Lessor's reasonable request so that such respective minimum amounts of coverage shall not be less than the amounts then required by statute or generally carried in connection with similar developments in New York State, whichever is greater.

13.3 Casualty Insurance. Lessee, at its expense, shall at all times during the Possession Period maintain (or cause to be maintained) all Risk Property Damage Insurance, including flood, windstorm or change of condition, lightning, tornado and hail, boiler and machinery and electrical injury coverage, on the Premises and all alterations, extensions and replacements thereof, for the full replacement cost at the time of the loss, including any increased cost of construction (but excluding foundations and footings) and without reduction for depreciation, of the Premises, naming Lessor as a loss payee as its interest may appear. The determination of the full replacement cost amount shall be adjusted annually to comply with the requirements of the insurer and

Lessor. In addition, each policy shall contain inflation guard coverage and a waiver of co-insurance provisions. Lessee hereby releases Lessor and its Affiliates from any and all liability for damage or loss to the Premises, any buildings, and Improvements and all alterations, extensions and replacements thereof, unless such damage or loss is caused by the negligence of Lessor, its employees, agents or independent contractors, without regard to the amount of insurance proceeds recovered from Lessee's insurer. The maximum deductible shall be five percent (5%) of total insured value unless otherwise consented to by Lessor.

13.4 Employer's Liability. Lessee, at its expense, shall maintain continuously in force at all times during the Term, if Lessee has any employees, Workers' Compensation Insurance in accordance with all applicable Requirements, including Employer's Liability Insurance, in the amounts required by law. Notwithstanding applicable statutory exemptions, Workers' Compensation Insurance shall be maintained regardless of the number of employees employed by Lessee or the type of work performed.

13.5 Excess Liability. Lessee, at its expense, shall maintain continuously in force at all times during the Possession Period, excess liability insurance in compliance with the following:

13.5.1 Injury/Property $1,000,000.00 per occurrence.

13.5.2 The policy shall be written on an excess, "following form" basis above the coverages described in the Employer's Liability, Commercial General Liability and Automobile Liability above. The policy also is to provide a "drop down" feature in case the limits of the primary policy are exhausted.

All of the policies required to be maintained in this Article are collectively referred to as "Lessee's Policies".

13.6 Requirements of Lessee's Policies.

13.6.1 Lessee shall, as of the Possession Period, deliver to Lessor evidence that said insurance policies have been prepaid as required above with certificates signed by an authorized agent of the applicable insurance companies evidencing such insurance satisfactory to Lessor. Lessee shall renew all such insurance and deliver to Lessor certificates and certified copies of all policies and endorsements evidencing such renewals at least ten (10) days before any such insurance shall expire. Lessee further agrees that each such insurance policy: (i) shall provide for at least thirty (30) days prior written notice to Lessor prior to any policy reduction or cancellation for any reason other than non-payment of premium and at least ten (10) days prior written notice to Lessor prior to any cancellation due to non-payment of premium; (ii) shall contain an endorsement or agreement by the insurer that any loss shall be payable to Lessor or its Affiliates in accordance with the terms of such policy notwithstanding any act or negligence of Lessor, Lessee or any other Person which might otherwise result in forfeiture of such insurance; (iii) shall waive all rights of subrogation against Lessor and its Affiliates; (iv) include standard non-contributory clauses naming Lessor, Permitted Mortgagee and any designated Affiliates of either, (v) in the event that any portion of the Premises constitutes a legal non-conforming use under applicable Improvements' zoning or land use laws or ordinances, shall include an ordinance and law coverage endorsement which will contain Coverage A: "Loss Due to Operation of Law" (with a minimum liability limit equal to Replacement Cost with Agreed Value Endorsement), Coverage B: "Demolition Cost" and Coverage C: "Increased Cost of Construction" coverages in amounts as required by Lessor; and (vi) may be in the form of a blanket policy, provided that, Lessee hereby acknowledges and agrees that failure to pay any portion of the premium therefor which is not allocable to the Improvements and the Premises or any other action not relating to the Improvements and the Premises which would otherwise permit the issuer thereof to cancel the coverage thereof, would require the Improvements and the Premises to be insured by separate, single-property policies and the blanket policy must properly identify and fully protect the Improvements and the Premises as if a separate policy were issued for one hundred percent (100%) of replacement cost at the time of loss and otherwise meet all of Lessor's applicable insurance requirements set forth in this Article 13. Approval of any insurance by Lessor shall not be a representation of the solvency of any insurer or the sufficiency of any amount of insurance. In the event Lessee fails to provide, maintain, keep in force or deliver and furnish to Lessor the policies of insurance required by this Lease or evidence of their replacement or renewal as required herein, Lessor may, but shall not be obligated to, procure such insurance and Lessee shall pay as an Additional Amount all amounts advanced by Lessor therefor, together with interest thereon at the Interest Rate from and after the date advanced by Lessor until actually repaid by Lessee, promptly upon

demand by Lessor. Lessor shall not be responsible for nor incur any liability for the failure of the insurer to perform even though Lessor has caused the insurance to be placed with the insurer after failure of Lessee to furnish such insurance.

13.6.2 None of the requirements contained herein as to types and limits of insurance coverage to be maintained by Lessee is intended to and shall not in any manner limit or qualify the liabilities and obligations assumed by Lessee. Notwithstanding requirements in agreements between Lessee and any third parties, Lessor shall have no responsibilities for insurance deductibles or self-insured retentions.

13.6.3 Notwithstanding the foregoing, Lessor agrees to reasonably cooperate with Lessee as to any request to change or amend the insurance required herein if such insurance is unavailable or obtaining such insurance is impracticable despite Lessee using commercially reasonable efforts to obtain same.

13.7 Contractor Insurance Requirements. Lessee shall cause its general construction contractor and all of its operating contractor(s) performing any services in or about the Premises at any time during the Term to maintain in effect at all times during the full term of such work, insurance coverage in accordance and full compliance with all of the requirements set forth in this Article 13 and shall include appropriate endorsements to cover all sub-contractors performing services or work in connection with the Development. During the period of any construction, renovation or alteration of or addition to the existing Improvements which exceeds the lesser of ten percent (10%) of the principal amount of the indebtedness secured by any Permitted Mortgage or $100,000.00, at Lessor's request, a completed value, "All Risk" Builder's Risk form or "Course of Construction" insurance policy in non-reporting form, in an amount approved by Lessor, may be required.

13.8 Insurer. The insurance provided for pursuant to this Article shall be effected under a valid and enforceable policy or policies issued by insurers of recognized responsibility authorized to do business in the State of New York and which have and maintain a claims paying ability rating of "A" or better by Standard & Poor's (or equivalent acceptable to Lessor). All policies shall be for terms of at least one year, with premium prepaid. Such policies may be carried under a blanket policy so long as the coverage afforded is no less than that required under this Article and contains a "per location aggregate" in the applicable amounts set forth above.

13.9 Evidence. Lessee shall deliver to Lessor evidence of Lessee's insurance policies at all times during the term.

13.10 Notwithstanding anything in this Lease to the contrary, Lessor and Lessee each waives any rights of action for negligence against the other party, which may arise during the Term for damage to the Premises, Building or the property therein, resulting from any fire or other casualty of the kind covered by All Risk property insurance policies, regardless of whether or not, or in what amounts, such insurance is now, or may hereafter be, carried by the parties except to the extent a party fails to maintain insurance required hereunder or a party's act or omission causes an insurance company to disclaim or otherwise void coverage. All property insurance policies affecting all or any portion of the Premises or Building shall contain a waiver of subrogation by the insurer confirming that the foregoing waiver by Lessor or Lessee, as applicable, shall not invalidate any such property insurance policy.

ARTICLE 14.
CASUALTY

14.1 Neither party hereto shall be released, by reason of any damage or destruction of the Premises from the obligations created or imposed by virtue of this Lease. Except as expressly set forth in this Section 14.1, this Lease shall not terminate, be forfeited or be affected in any manner, and there shall be no reduction or abatement of the Rent payable hereunder, by reason of damage to or total, substantial or partial destruction of any of the Improvements or any part thereof or by reason of the unleaseability of the same or any part thereof, for or due to any reason or cause whatsoever. Lessee, notwithstanding any Requirements, waives any and all rights to quit or surrender the Premises or any part thereof. Lessee expressly agrees that its obligations hereunder, including, without limitation, the payment of Rent, shall continue as though the Improvements had not been damaged or destroyed and without abatement, suspension, diminution or reduction of any kind. It is the intention of Lessor and Lessee that the foregoing is an "express agreement to the contrary" as may be provided in any applicable statute of the State of New York. Notwithstanding the foregoing, in the event that

the Premises is damaged by fire or other casualty to such an extent that the cost to restore the improvements on the Premises exceeds 70% of the replacement cost as determined by Lessee's insurance carrier responsible for underwriting the loss or if the cost to restore the improvements thereon exceeds 20% of the cost of replacement and occurs within the last two (2) years of this Lease, Lessee shall have the right, within ninety (90) days after the occurrence of such loss or destruction, to terminate this Lease, by notice in writing to Lessor. In such event, then the Term shall cease ten (10) days after notice thereof from Lessee to Lessor thereof. Additionally, if Lessee has exercised an Option and if any of the Initial Parcel or any Pad leased by Lessee is damaged by fire or other casualty to such an extent that the cost to restore same exceeds 70% of the replacement cost of the improvements on the Initial Parcel or any such Pad or Pads, as applicable, as determined by Lessee's insurance carrier responsible for underwriting the loss or if the cost to restore exceeds 50% of the cost of replacement of such improvements and occurs within the last two (2) years of this Lease, Lessee shall have the right, within ninety (90) days after the occurrence of such loss or destruction, to terminate this Lease as to the Initial Parcel or the Pad or Pads so affected, by notice in writing to Lessor. In such event, then the Term shall cease as to the Initial Parcel, Pad or Pads so affected ten (10) days after such Initial Parcel, Pad or Pads so affected are returned to the condition required in Section 27.1 and Rent shall be equitably reduced to account for the termination of the Lease as to such Initial Parcel, Pad or Pads.

14.2 Notice of Damage. In the event of any material damage to the Premises by reason of fire or other casualty, Lessee shall give immediate notice thereof to Lessor.

ARTICLE 15.
TRADE FIXTURES AND PERSONAL PROPERTY

15.1 Personal Property. Except as otherwise provided in this Lease, any removable trade fixtures, signs, equipment and other personal property (collectively, "Personal Property") installed in or on the Premises by, Assignees, Sublessees, concessionaires or occupants may be removed, so long as such removal does not result in structural damage, and shall remain the property of the party who owns it unless ownership is otherwise vested in Lessee under any Assignment, Sublease or other agreement. The owner of such Personal Property shall have the right at any time prior to expiration or early termination of this Lease to remove or permit removal of any and all of the same without the consent by Lessor. Lessee and the owner of such Personal Property shall be jointly and severally responsible to repair any and all damage caused by the removal thereof.

ARTICLE 16.
ASSIGNMENTS AND SUBLEASE

16.1. Assignments. Lessee shall not assign, or sublease (which term shall be deemed to include the granting of concessions and licenses and the like) all or any part of the Premises or suffer or permit this Lease or the leasehold estate hereby created or any other rights arising under this Lease to be assigned, transferred, mortgaged, pledged, hypothecated or encumbered, in whole or in part, whether voluntarily, involuntarily or by operation of law, or permit the use or occupancy of the Premises by anyone without the express written consent of Lessor, which consent Lessor shall not unreasonably, withhold, condition or delay provided Lessee remains liable for the performance of all obligations under the terms of this Lease. Lessor's failure to reasonably reject a request for assignment or sublease within twenty (20) days shall constitute acceptance. Notwithstanding the foregoing, after any such assignment or sublease Lessee shall remain liable for all payments and obligations under this Lease.

If the rent and other sums (including, without limitation, all monetary payments plus the reasonable value of any services performed or any other thing of value given by any assignee or sublessee in consideration of such assignment or sublease), either initially or over the term of any assignment or sublease, actually paid by such assignee or sublessee exceed the Annual Fixed Rent plus Additional Rent called for hereunder with respect to the space assigned or sublet, Lessee shall pay fifty percent (50%) of such excess to Lessor after deduction of reasonable costs and expenses incurred by Lessee in connection with such assignment or sublease including, without limitation, brokerage, tenant improvements, cost of work and legal fees and costs, as Additional Rent, payable monthly at the time for payment of Base Rent. Nothing in this paragraph shall be deemed to abrogate the provisions of this Subsection 16.1 and Lessor's acceptance of any sums pursuant to this paragraph shall not be deemed a granting of consent to any assignment of the Lease or sublease of all or any portion of the Premises.

16.2. Notice of Assignments and Subleases. Within a reasonable period of time after the execution of each Assignment or Sublease, Lessee shall give Lessor a notice of the Assignment or Sublease which shall specify the following:

a) the applicable portion of the Premises;

b) the commencement and termination date for the Assignment or Sublease; and

c) the Assignee's or Sublessee's address for notice.

ARTICLE 17.
CONDEMNATION

17.1. Entire Taking. If the entire Premises shall be taken by exercise of the power of eminent domain or condemnation (or by purchase in lieu thereof) then this Lease shall terminate as of the time when Lessor is divested of its interest in the Premises, and the Rent theretofore paid or then payable shall be apportioned and paid up to the date of termination, and any unearned Rent shall be refunded by Lessor to Lessee.

17.2. Partial Taking. If a portion of the Premises shall be taken by exercise of the power of eminent domain or condemnation (or by purchase in lieu thereof) and such taking results in the loss of any building comprising a part of the Improvements on the Premises in its entirety or a substantial portion of such building on the Premises, Lessee may, at its option terminate this Lease as to the building so lost and that portion of the Premises on which the "lost" building is situated and which serves the lost building, all in accordance with the terms and provisions below. Lessee shall provide notice to Lessor within ten (10) days after receipt of notice of any contemplated taking. Within thirty (30) days of notice of such proposed taking, Lessee shall provide notice to Lessor of its intent to terminate the Lease and shall specify the portion of the Premises and Improvements with respect to which it so intends to terminate the Lease.

17.3. Condemnation Proceeds. Lessor and, if a default does not under this Lease, Lessee and any applicable Permitted Mortgagees and Sublessees shall cooperate in prosecuting and collecting their respective claims for an award on account of a taking of all or any portion of the Premises and all damages or awards (with any interest thereon) to which Lessor, Lessee or any applicable Permitted Mortgagees and Sublessees may be entitled by reason of any taking of all or any portion of the Premises (herein referred to as "Condemnation Proceeds"). Except as expressly provided in this Article, no taking of any interest in all or any portion of the Premises shall be grounds for termination of this Lease or any portion thereof by Lessor or Lessee.

a) Lessor at all times, regardless of when the taking occurs, shall be entitled to receive, with interest thereon, that portion of the award as shall represent compensation for its loss of Rent, under this Lease, plus the value of Lessor's reversionary interest in the Improvements at the end of the Term both discounted to present value. Lessor shall also be entitled to severance damages for any harm caused by the taking to any surrounding lands.

b) During all the Lease Term, Lessee shall be entitled to the entire balance of the award relating to the value of Lessee's Leasehold Estate.

c) If the values of the respective interests of Lessor and Lessee shall be determined according to the provisions of subdivisions (a) and (b) of this Section in the proceeding pursuant to which any portion of the Premises shall have been taken or condemned, the values so determined shall be conclusive upon Lessor and Lessee. If such values shall not have been thus separately determined, such values shall be fixed by agreement between Lessor and Lessee.

ARTICLE 18.
LESSORS' RIGHT TO PERFORM AND INSPECT

18.1 Emergency Repairs. In the case of an emergency which represents an immediate threat to persons or property, the Lessor may, but without being obligated to do so, enter the Premises to perform emergency repairs without waiting for the expiration of any applicable cure period provided that any such access (and any other access) to the Premises by Lessor shall be made only as permitted by, and in full compliance with, the NY Medicinal Marihuana Law.

ARTICLE 19.
HOLDING OVER

19.1 No Holdover. Neither Lessee nor any Assignee or Sublessee, upon the expiration or cancellation of this Lease, is entitled to hold over for any reason. If, nevertheless, there is any holding over by Lessee, any Assignee or Sublessee, the holding over shall give rise to a tenancy at the sufferance of Lessor upon the same terms and conditions as are provided for herein with a Rent for the hold over period equal to one and one-half (1.5) times the last annual installment of Rent prorated and due monthly in advance.

ARTICLE 20.
MORTGAGES

20.1 Mortgage. Lessor represents that there is currently no mortgage or ground lease affecting the any of the Entire Premises or the Project. This Lease, and all rights of Lessee hereunder, shall be subject and subordinate to any and all mortgage, which may hereafter affect any of the Entire Premises provided that the holder of any such mortgage shall execute and deliver to Lessee an agreement ("SNDA Agreement"), in form reasonably satisfactory to Lessee, providing that such holder will recognize this Lease and not disturb Lessee's possession of all or any portion of the Entire Premises or the Project in the event of foreclosure if Lessee is not then in default hereunder beyond any applicable cure period. Lessee agrees, upon receipt of such SNDA Agreement, to execute such further reasonable instrument(s) as may be necessary to subordinate this Lease to the lien of any such mortgage.

20.2 Lessor's Representations. Lessor represents and warrants to Lessee as follows:

(a) Lessor has full right and authority to enter into this Lease and perform Lessor's obligations under this Lease, and Lessor has title to the Project in fee simple, subject only to Permitted Liens (as defined below), and that there are no exclusive use restrictions in other Lessees' leases, restrictive covenants or other agreements, and no zoning or other laws, and no other legal impediment, any of which would prevent Lessee from occupying the Entire Premises for the purposes herein provided, or otherwise prevent the Entire Premises from being developed in accordance with the layout shown on the Site Plan, and Lessor shall not enter into any exclusive use restrictions, restrictive covenants or other agreements, which would prevent Lessee from occupying the Entire Premises for the purposes herein provided. As used herein, "Permitted Liens" shall mean (A) current taxes not past due, and (B) utility easements and other matters of record not conflicting with Lessee's rights under this Lease or preventing Lessee from using the Entire Premises pursuant to the terms and conditions of this Lease;

(b) Lessor shall at all times comply with all applicable laws, ordinances, rules and regulations governing the division or parcelization of real property for purposes of lease, sale or financing, so that this Lease shall constitute a lawful conveyance to Lessee of a leasehold estate in the Entire Premises, and on the date of delivery of possession of the Premises to Lessee, to the best of Lessor's knowledge, the Entire Premises shall be free of all violations, orders, or notices of violations of Laws;

(c) The Entire Premises is not subject to any existing claim for mechanics' liens, nor are there any third parties in or entitled to possession thereof. Lessor has not granted and during the Term shall not grant to anyone an exclusive right to sell goods or provide services that would limit or interfere with Lessee's right to use the Entire Premises as permitted under this Lease;

(d) Lessor has not received any notice, nor is it aware of any pending action to take by condemnation all or any portion of the Entire Premises or the Project;

(e) The Entire Premises has free and full access to and from all adjoining streets, roads and highways, and to Lessor's knowledge there is no pending or threatened action which would impair such access;

(f) The Entire Premises has not been classified under any designation authorized by law to obtain a special low ad valorem tax rate or receive either an abatement or deferment of ad valorem taxes which, in such case, will result in additional, catch-up ad valorem taxes in the future in order to recover the amounts previously abated or deferred, nor is the Entire Premises subject to any agreement, contract or commitment regarding valuation and/or minimum valuation;

(g) Lessor has received no notice and is not otherwise aware that the Entire Premises, the Project or the proposed use is, or will be, in violation of any local governmental rule, ordinance, regulation or building code, nor has Lessor received notice of any pending or threatened investigation regarding a possible violation of any of the foregoing;

(h) There is no litigation and no other proceedings are pending or threatened relating to the Entire Premises, the Project or the use thereof;

(i) This Lease is and shall be binding upon and enforceable against Lessor in accordance with its terms, and the transaction contemplated hereby will not result in a breach of, or constitute a default or permit acceleration and maturity under any indenture, mortgage, deed of trust, loan agreement or other agreement to which Lessor, the Entire Premises or the Project are subject or by which Lessor, the Entire Premises or the Project are bound.

(j) Lessor has not (i) made a general assignment for the benefit of creditors, (ii) filed any involuntary petition in bankruptcy or suffered the filing of any involuntary petition by Lessor's creditors, (iii) suffered the appointment of a receiver to take possession of all or substantially all of Lessor's assets, (iv) suffered the attachment or other judicial seizure of all, or substantially all, of Lessor's assets, (v) admitted in writing its inability to pay its debts as they come due, or (vi) made an offer of settlement, extension or composition to its creditors generally.

(k) Lessor is the fee owner of the rights to all minerals and natural resources located below the ground surface of the Entire Premises, that no other party has the right to extract same, and that such minerals and natural resources shall not be extracted during the Term of this Lease.

Lessor shall indemnify, protect, defend and hold Lessee forever harmless from and against any and all claims, actions, judgments, liabilities, liens, damages, penalties, fines, costs and expenses suffered or incurred by Lessee directly arising out of any breach of the foregoing representations and warranties.

20.3 Preconditions. Lessee, from time to time during the Term of this Lease, may make one or more Permitted Mortgages upon Lessee's Leasehold Estate without the prior written consent of Lessor; provided that Lessee or the holder of the Permitted Mortgage shall promptly deliver to Lessor, in the manner herein provided for the giving of notice to Lessor, a true copy of the Permitted Mortgage and of any assignment thereof and shall notify Lessor of the address of the Permitted Mortgagee to which notices may be sent.

20.4 Lessor's Acknowledgment. Upon Lessee's request, Lessor shall provide a receipt acknowledging receipt of a copy of any Permitted Mortgage under Section 20.3 hereof.

20.5 Conditions. The following provisions shall apply to any Permitted Mortgage made in accordance with Section 20.3 hereof:

a) For the purpose of this Section, a "Permitted Mortgagee" shall be limited to an "Institutional Lender," or an "Approved Lender." An "Institutional Lender" shall mean a bank, savings bank, savings and loan association or institution, insurance company, trust company, mortgage banking company, non-Affiliate private equity or other investment fund, college or other institution of learning, pension, profit-sharing or retirement fund or trust, real estate investment trust, Governmental Authority, or any other organization or company similar to any of the foregoing, or

any Affiliate of any of the foregoing. The parties understand and agree that the definition of Institutional Lender shall include, in addition to current lenders of the sort listed above, future entities of a character not within their contemplation at the time of execution of this Lease but which shall perform functions similar to any of the foregoing. An "Approved Lender" shall mean a Lender who is not an "Institutional Lender" but who has been approved by Lessor prior to the recording and/or filing of such Lender's Permitted Mortgage. Lessor agrees that its approval of a potential Lender as an "Approved Lender" shall not be unreasonably withheld or delayed and Lessor agrees that is shall be deemed to have approved any proposed Lender as an "Approved Lender" if it has not disapproved such Lender within forty-five (45) days after Lessee has requested approval of the proposed Lender.

b) Nothing herein contained shall be deemed to impose any obligation on the part of Lessor to deliver physical possession of the Premises to any Permitted Mortgagee, or to its nominee. Lessor agrees, however, that Lessor will, at the sole cost and expense of such Permitted Mortgagee, or its nominee, cooperate in the prosecution of summary proceedings to evict the then defaulting Lessee.

20.6 Lessor's Right to Mortgage Premises. Lessor reserves the right, at any time, to obtain a mortgage on Lessor's fee interest in the all or any portion of the Parcel or the Phase 2 Parcel provided that an SNDA Agreement is provided to Lessee as per Section 20.1 above.

ARTICLE 21.
NO SUBORDINATION

21.1 No Subordination. Lessor's interest in the Premises and in this Lease, as the same may be modified, amended or supplemented, shall not be subject or subordinate to: (a) any mortgage or deed of trust now or hereafter placed upon Lessee's Leasehold Estate; or (b) any other liens or encumbrances hereafter affecting Lessee's Leasehold Estate.

ARTICLE 22.
DEFAULT AND REMEDIES

22.1 Event of Default. (i) If Lessee shall default in its obligations to pay the Base Rent or Additional Rent or any other charges under this Lease when due or shall default in complying with its obligations under Articles 4 and 5 of this Lease and if any such default shall continue for thirty (30) days after notice from Lessor designating such default, or (ii) if as promptly as possible but in any event within thirty (30) days after notice from Lessor to Lessee specifying any default or defaults other than those set forth in clause (i) Lessee has not cured the default or defaults so specified (unless such default or defaults are incapable of being cured within thirty (30) days, in which case no such default or defaults shall be deemed an Event of Default provided that Lessee has commenced to cure such default or defaults within thirty (30) days after notice and diligently pursues the same to completion, provided that, in all events, the same shall not subject Lessor to any civil or criminal liability or forfeitures), then, and in any of such cases indicated in clauses (i) and (ii) hereof (collectively and individually, a "Event of Default "), Lessor may, in addition to and not in derogation of any remedies for any preceding breach of covenant, immediately or at any time thereafter give notice to Lessee terminating this Lease and the Term hereof, which notice shall specify the date of termination, whereupon on the date so specified, the Term of this Lease and all of Lessee's rights and privileges under this Lease shall expire and terminate but Lessee shall remain liable as hereinafter provided.

22.2 Remedies. In the event of any termination pursuant to Section 22.1, Lessee shall pay the Base Rent, Additional Rent and other charges payable hereunder up to the time of such termination. Thereafter, whether or not the Premises shall have been re let, Lessee shall be liable to Lessor for, and shall pay to Lessor the Base Rent, Additional Rent and other charges which would be payable hereunder for the remainder of the Term of this Lease had such termination not occurred, less the net proceeds, if any, of any reletting of the Premises. Lessee shall pay such damages to Lessor monthly on the days on which the Base Rent, Additional Rent or other charges would have been payable hereunder if the Term of this Lease had not been so terminated.

Nothing contained in this Lease shall, however, limit or prejudice the right of Lessor to prove for and

obtain in proceedings for bankruptcy or insolvency by reason of the termination of this Lease, an amount equal to the maximum allowed by any statute or rule of law in effect at the time when, and governing the proceedings in which, the damages are to be proved, whether or not the amount be greater than, equal to, or less than the amount of the loss or damages referred to above.

In case of any Event of Default, re-entry, expiration and repossession by summary proceedings or otherwise, Lessor may (i) relet the Premises or any part or parts thereof, either in the name of Lessor or otherwise, for a term or terms which may at Lessor's option be equal to or less than or exceed the period which would otherwise have constituted the balance of the Term of this Lease and may grant concessions or free rent to the extent that Lessor considers advisable and necessary to relet the same and (ii) may make such alterations, repairs and decorations in the Premises as Lessor in its sole judgment considers advisable and necessary for the purpose of reletting the Premises; and the making of such alterations, repairs and decorations shall not operate or be construed to release Lessee from liability hereunder as aforesaid. Lessor shall in no event be liable in any way whatsoever for failure to relet the Premises, or, in the event that the Premises are relet, for failure to collect the rent under such reletting.

To the fullest extent permitted by law, Lessee hereby expressly waives any and all rights of redemption granted under any present or future laws in the event of Lessee being evicted or dispossessed, or in the event of Lessor obtaining possession of the Premises, by reason of the violation by Lessee of any of the covenants and conditions of this Lease. Without limiting the foregoing, Lessee hereby expressly waives, so far as permitted by law, the service of any notice of intention to re-enter provided for in any statute, or of the institution of legal proceedings to that end, and Lessee, for and on behalf of itself and all persons claiming through or under Lessee also waives any and all rights of redemption or re-entry or repossession under present or future laws.

Notwithstanding anything set forth in this Lease to the contrary, Lessor acknowledges that its rights of reentry into the Premises set forth in this Lease do not confer on it the authority to manufacture and/or dispense on the Premises medical marihuana in accordance with Article 33 of the Public Health Law and Lessor agrees to provide the New York State Department of Health, Mayor Erastus Corning 2nd Tower, The Governor Nelson A. Rockefeller Empire State Plaza, Albany, N.Y. 12237, with notification by certified mail of its intent to reenter the Premises or to initiate dispossess proceedings or that the Lease is due to expire, at least 60 days prior to the date on which the Lessor intends to exercise a right of reentry or to initiate such proceedings or at least 60 days before expiration of the Lease.

Lessor and Lessee hereby waive any claim for consequential, special or punitive damages that either party may have against the other.

22.3 Other Remedies. Except as prohibited by applicable law, rule and regulation, including without limitation the NY Medicinal Marihuana Law and expressly subject to Section 22.2 above, in the event of any Event of Default at any time prior to Lessor's election to terminate the Term of this Lease, Lessor may terminate Lessee's right to possession of the Premises, enter upon and take possession of the Premises and expel or remove Lessee and any other person who may be occupying any portion of the Premises, without being liable for prosecution or any claim for damages therefor, and without terminating the Lease. Lessor shall be under no obligation to, but may relet the Premises and receive the rent therefor under terms and conditions acceptable to Lessor in its sole discretion and judgment. In the event of such election by Lessor, Lessee shall pay to Lessor within ten (10) days after written notice by Lessor sums equivalent to the Annual Fixed Rent and Additional Rent reserved hereunder as and when same would otherwise be due under this Lease had same not been terminated less the avails of reletting, if any. Lessee shall also pay within ten (10) days after notice, any amounts reasonably expended or incurred by Lessor for costs of reletting the Premises or any portion thereof, including, but without limitation, all repossession costs, brokerage commissions, legal expenses, reasonable attorneys' fees, advertising, expenses of employees, alterations costs and the value of any Lessee inducements (including but without limitation free rent, moving costs and contributions toward leasehold improvements). If Lessee's right to possession of the Premises is terminated, Lessee shall nonetheless remain liable (in addition to accrued liabilities) to the extent legally permissible for the Annual Fixed Rent and Additional Rent and all other charges Lessee would have been required to pay until the date this Lease would have expired had such termination of Lessee's right to possession of the Premises not occurred less the avails of reletting as aforesaid. Lessor shall have the right, at its option, to recover sums

due hereunder through litigation or otherwise from time to time on one or more occasions without being obligated to wait until the expiration of the Term of this Lease before filing suit. Notwithstanding Lessor's exercise of the remedy set forth in this Section 22.3, Lessor shall have the continuing right, at its option, to terminate the Term of this Lease in accordance with Section 22.1 and to recover any amounts provided in Section 22.2.

22.4 Lessor's Right to Cure Defaults. At any time, Lessor shall have the right, but shall not be required, to pay such sums or do any act which requires the expenditure of monies which may be necessary or appropriate by reason of the failure or neglect of Lessee to comply with any of its obligations under this Lease beyond all applicable notice and cure periods (provided, however, in the case of an emergency, Lessor shall have no obligation to provide any advance notice or wait for the expiration of any applicable cure period before exercising its rights under this Section 22.3), and in the event of the exercise of such right by Lessor, Lessee agrees to pay to Lessor forthwith upon demand, as Additional Rent, all such sums including reasonable attorney's fees, together with interest thereon at the Interest Rate.

22.5 Fees and Costs. Lessee shall pay to Lessor all costs and expenses, including, without limitation, reasonable attorneys' fees and disbursements, incurred by Lessor in any action or proceeding to which Lessor may be made a party by reason of any act or omission of Lessee. Lessee also shall pay to Lessor all costs and expenses, including, without limitation, reasonable attorneys' fees and disbursements, incurred by Lessor in enforcing any of the covenants and provisions of this Lease and incurred in any action brought by Lessor against Lessee on account of the provisions hereof, and all such costs, expenses, and reasonable attorneys' fees and disbursements may be included in and form a part of any judgment entered in any proceeding brought by Lessor against Lessee on or under this Lease. All of the sums paid or obligations incurred by Lessor as aforesaid, with interest at the Interest Rate, shall be paid by Lessee to Lessor within ten (10) days after demand by Lessor.

22.6 Waiver. No waiver or breach of any term of this Lease shall be construed as a waiver of any subsequent breach of the same or any other term

ARTICLE 23.
LESSE'S REMEDIES

23.1 No Rent Abatement. Except as may be otherwise expressly provided herein, there shall be no abatement, off-set, diminution or reduction of Rent payable by Lessee hereunder or of the other obligations of Lessee hereunder under any circumstances.

23.2 Self Help / Termination. In the event of any default by Lessor under this Lease ("Lessor Default"), Lessee may give Lessor written notice specifying such Lessor Default and, if Lessee shall do so, then Lessor shall have twenty (20) days in which to cure any such Lessor Default. In the event that Lessor shall remain in default following its said right to cure, then, in addition to all other rights and remedies available to Lessee at law and in equity, Lessee may cure such Lessor Default on behalf of Lessor by doing the necessary work and/or making the necessary payments, and billing Lessor for the reasonable costs thereof, which Lessor agrees to pay to Lessee within 30 days of receipt of Lessee's demand therefor and reasonable evidence of the cost of the same. If Lessor shall fail to pay within said 30-day period, Lessee may deduct the entire cost from any Rent or other charge due Lessor hereunder.

ARTICLE 24.
TRANSFER OF INTEREST

24.1 Lessor's Permitted Transfer. Lessor may sell or lease its interest in the Premises without Lessee's consent. Any sale or exchange of the Premises shall in any event be made subject to this Lease.

ARTICLE 25.
COMMUNITY STANDARDS

25.1 Non-Discrimination. Lessee agrees that it will not affect or execute any agreement, assignment, lease, sublease, conveyance, or other instrument whereby the Premises or any part thereof is restricted upon the basis of race, religion, color, sex, age, handicap disability or national origin in the sale, lease, or occupancy

thereof. In addition, Lessee, in connection with the erection, maintenance, repair, restoration, alteration or replacement of, or addition to, the Improvements shall: (a) not discriminate nor permit discrimination against any Person by reason of race, creed, color, religion, national origin, ancestry, sex, age, disability or marital status; and (b) comply with all applicable Requirements from time to time in effect prohibiting such discrimination.

ARTICLE 26.
FORCE MAJEURE

26.1 Unavoidable Delays. Whenever either Party, pursuant to the provisions of this Lease, is required to construct any Improvements on the Premises within a particular time limit, or at or before a specified date, and if Lessee should, in good faith, be delayed in such work, erection, restoration or repair by any act of war, strike, lockout, fire, hurricane, flood, abnormal weather condition which necessitates extraordinary measures and expense, other casualty, or any other cause in each instance beyond its reasonable control, and occurring without its fault or negligence (each a "Force Majeure Event"), a period of time equal to such period of delay shall be added to the particular time limit otherwise provided herein, and Lessee shall not be in default if it shall complete such work, erection, restoration or repair within the stipulated time limit, increased by a period of time equal to such period of delay. Neither economic impracticality nor the inability to perform in whole or in part for economic reasons shall constitute a Force Majeure Event.

ARTICLE 27.
SURRENDER AT END OF TERM

27.1 Surrender. On the Expiration Date or earlier termination of the Term, Lessee shall surrender the Premises in its then existing condition provided that if any improvements on the Premises shall be in an unsafe or unstable (i.e. in imminent danger of collapse) condition, Lessee shall take such action as is reasonably necessary to place same in a reasonably safe and stable condition which, at Lessee's option may include demolition. Title to the Improvements shall automatically, and without the necessity of any further action, vest in Lessor upon the expiration or earlier termination of this Lease. Lessee hereby waives any notice now or hereafter required by law with respect to vacating the Premises on any such termination or expiration of this Lease.

Upon the expiration or earlier termination of this Lease, or if requested by Lessor upon a re-entry by Lessor upon the Premises pursuant to Article 22, Lessee shall remove its personal property and equipment, provided that the removal of any such property does not cause structural damage to the Improvements, necessitate changes in the Improvements or render the Improvements or any part thereof unfit for use and occupancy and shall well and truly surrender and deliver up to Lessor the Premises and all Improvements thereon, free and clear of all lettings, occupancies, liens, service contracts and encumbrances. Lessee shall pay the cost of repairing any damage to the Premises arising from the removal of such property, and such obligation shall survive the Term. . Except as may be otherwise expressly provided herein, Lessee shall have no obligation to undo or remove any Alterations or Improvements from the Premises.

27.2 Remaining Property. Subject to the last paragraph of Section 22.2 above, any personal property of Lessee or of any Sublessee which shall remain on the Premises after the expiration or termination of this Lease and after the removal of Lessee or such Sublessee, may, at the option of Lessor, be deemed to have been abandoned by Lessee or such Sublessee and either may be retained by Lessor as its property or be disposed of, without accountability, in such manner as Lessor may see fit and at Lessee's sole cost and expense, and such obligation shall survive the Term. Lessor shall not be responsible for any loss or damage occurring to any such property owned by Lessee or any Sublessee.

27.3 Survival. The provisions of this Article shall survive any expiration or termination of this Lease.

ARTICLE 28.
LESSOR NOT LIABLE FOR INJURY OR DAMAGE, ETC.

28.1 No Liability. Lessor shall not in any event whatsoever be liable for any injury or damage to Lessee or to any other Person happening on, in or about the Premises and its appurtenances, nor for any injury or damage to the Premises or to any property belonging to Lessee or to any other Person which may be caused

by any fire or breakage, or by the use, misuse or abuse of the Improvements (including, but not limited to, any of the common areas within the buildings, fixtures, equipment, elevators, hatches, openings, installations, stairways, hallways, or other common facilities), or the streets or sidewalk area within or adjacent to the Premises or which may arise from any other cause whatsoever excluding Lessor's grossfully negligent or willful misconduct.

28.2 Utilities. Absent the negligence or willful misconduct of Lessor, from and after the Commencement Date, Lessor shall not be liable to Lessee or to any other Person for any failure of water supply, gas or electric current, nor for any injury or damage to any property of Lessee or of any other Person or to the Premises caused by or resulting from gasoline, oil, steam, gas, electricity, or hurricane, tornado, flood, wind or similar storms or disturbances, or water, rain or snow which may leak or flow from the street, sewer, gas mains or subsurface area or from any part of the Premises, or leakage of gasoline or oil from pipes, appliances, sewer or plumbing works therein, or from any other place, nor for interference with light or other incorporeal hereditaments by anybody. Notwithstanding the foregoing, to the extent any gasoline, oil, steam, gas, electricity or other utility lines service the Premises but are outside of the Premises, Lessor shall be responsible for the maintenance and/or operation of same to the extent same is not the responsibility of the applicable utility provider.

28.3 Soil. In addition to the provisions of Sections 28.1 and 28.2, in no event shall Lessor be liable to Lessee or to any other Person for any injury or damage to any property of Lessee or of any other Person or to the Premises, arising out of any sinking, shifting, movement, subsidence, failure in load-bearing capacity of, or other matter or difficulty related to, the soil, or other surface or subsurface materials, on the Premises, it being agreed that Lessee shall assume and bear all risk of loss with respect thereto.

ARTICLE 29.
Options/Right of First Refusal

29.1 Options. During the Term and provided there is not an ongoing Event of Default, Lessee shall have an exclusive continuing option to lease all or portions of the Phase 2 Parcel as described below (each an "Option"):

Lessee shall have the exclusive continuing option to lease each or any of the five (5) pads that make up the Phase 2 Parcel as shown on Exhibit B (each a "Pad"). Lessee may exercise its option to lease each Pad by providing Lessor with (30) days prior written notice listing the Pad or Pads it intends to lease. Lessee shall not be entitled to exercise its option as to any such Pad or Pads within the last twelve (12) months of the Term (unless Lessee shall extend the Term pursuant to Article 3 above). Upon the date specified in Lessee's notice of the exercise of such option and delivery of such Pad or Pads in Delivery Condition (which shall be performed by Lessor at Lessor's cost), the Pad optioned by Lessee will be added to the definition of Premises as of the date same is delivered in Delivery Condition, and for each Pad so optioned, the Base Rent for each such Pad so exercised shall be payable as follows:

i. No Base Rent for such Pad shall be payable for the first six (6) full calendar months following delivery of any such Pad in Delivery Condition;

ii. From and after the first day immediately following the sixth (6th) full calendar month following delivery of any such Pad in Delivery Condition through the expiration of the Term, Lessee shall pay Forty-Five Thousand Dollars ($45,000) per annum for any such Pad payable in equal monthly installments of $3,750 per month;

iii. In additional to the amounts in ii. above, a total amount not to exceed $30,000 (in the aggregate, not annually) in Base Rent shall also be payable for any such Pad in equal monthly installments commencing on the same day that monthly installments are due pursuant to ii. above (i.e. payments commencing following six (6) full calendar months after delivery of such Pad in Delivery Condition) provided that no such payments shall be required if a Pad is delivered with less than six (6) months left in the Term (after giving effect to any exercised extension option).

Assuming there are at least eighteen (18) calendar months remaining in the term (taking into account any extension pursuant to Article 3 above) as of the delivery of such Pad in Delivery Condition, such payments shall be in the amount of $2,500 each for twelve (12) months,

To preserve the total payment amount of $30,000, if there are less than eighteen (18) months and more than six (6) months remaining in the Term, such monthly payments shall be increased to be equal to (i) $30,000 divided by (ii) the number of months remaining in the Term minus six (6).

For example, if a Pad is so delivered in Delivery Condition with exactly sixteen (16) months left in the Term, no Base Rent for such Pad shall be due through the end of the sixth (6) month after such delivery. Starting on the first day of the seventh (7th) month after such delivery for each of the ten (10) months remaining in the Term, in addition to the Base Rent for such Pad payable per ii. above, Lessee shall pay an additional $3,000 per month ($30,000 divided by 10 (being 16 minus 6)) pursuant to this iii.

If Lessor shall fail to provide any Pad in Delivery Condition within thirty (30) days of the date set forth for addition of such space into the Premises pursuant to Lessee's notice above, Lessor shall be entitled to an abatement of Base Rent payable for the remainder of the Premises in the daily amount that would otherwise payable for such delayed Pad upon commencement of obligations to pay Base Rent for same for each day after such specified date that such Pad is not provided in Delivery Condition, provided that such thirty (30) days shall be extended day for day up to an additional thirty (30) days to the extent weather prevents Lessor from delivering the applicable Pad in Delivery Condition.

ARTICLE 30.
MISCELLANEOUS

30.1 Brokers. Each of the parties represents to the other that it has not dealt with any broker, finder or like entity in connection with this Lease other than Flaum Management Company, Inc., who will be paid by Lessor pursuant to a separate agreement. If any claim is made by any Person who shall claim to have acted or dealt with Lessee or Lessor in connection with this transaction, Lessee or Lessor as the case may be, will pay the brokerage commission, fee or other compensation to which such Person is entitled, shall indemnify and hold harmless the other party hereto against any claim asserted by such Person for any such brokerage commission, fee or other compensation and shall reimburse such other party for any costs or expenses including, without limitation, reasonable attorneys' fees and disbursements, incurred by such other party in defending itself against claims made against it for any such brokerage commission, fee or other compensation

30.2 Successors. Each provision of this Lease shall extend to, be binding on and inure to the benefit of not only Lessor and Lessee, but each of their respective heirs, administrators, executors, successors in interest and permitted assigns.

30.3 Quitclaim. After the expiration or termination of this Lease, Lessee shall execute, acknowledge and deliver to Lessor, within fifteen (15) days after written demand from Lessor to Lessee, any document in a form reasonably requested by Lessor quitclaiming any right, title or interest in the Leasehold Estate to Lessor or other document required by any reputable title company to resolve the cloud of this Lease from the Premises

30.4 Severability. If any provision of this Lease or any application thereof shall be invalid or unenforceable, the remainder of this Lease and any other application of such provision shall not be affected thereby and each term and provision of this Lease shall be valid and be enforced to the fullest extent permitted by law.

30.5 Amendments. This Lease may only be modified or amended in writing

30.6 No Waiver. No failure by Lessor or any prior Lessor or by Lessee to insist upon the strict performance of any covenant, agreement, term or condition of this Lease or to exercise any right or remedy consequent upon a breach thereof, and no acceptance of (or payment of) full or partial Rent during the continuance of any such breach, shall constitute a waiver of any such breach or of such covenant, agreement, term or condition. No covenant, agreement, term or condition of this Lease to be performed or complied with by Lessee or Lessor, and no breach thereof, shall be waived, altered or modified except by a written instrument executed by the other party. No waiver of any breach shall affect or alter this Lease, but each and every covenant, agreement, term and condition of this Lease still continue in full force and effect with respect to any other then existing or subsequent breach thereof

30.7 Construction. The parties acknowledge that they have both had the benefit of legal counsel with regard to this Lease. They therefore agree that, notwithstanding anything contained herein to the contrary, this Lease and all of its terms, provisions and conditions shall be construed fairly and not strictly against either Lessor or Lessee

30.8 Notices. Any notice to be given or other document to be delivered by one party to the other shall be in writing and served by personal service, nationally recognized overnight courier (e.g. Federal Express) or by depositing same in the United States Mail, postage prepaid, return receipt requested and addressed as follows:

To
Lessor: Seneca Depot, LLC
Attn: Asher Flaum
400 Andrews Street, Suite 500
Rochester, New York 14604
Phone: (585) 546-4866
Fax: (585) 325-6058

To
Lessee: Citiva Medical, LLC
73-7 Amboy Road
Staten Island, New York 10307
Attn: Frank Turano

Either party may, by written notice delivered to the other in accordance with the provisions of this Section, designate a different address to which any notices shall thereafter be delivered or mailed. Notice shall be deemed to have been given on the date on which notice was delivered if notice is given by personal delivery or overnight courier, and three (3) days following the date of deposit in the mail, if mailed. Notice shall be deemed to have been received on the date on which the notice is received by the party to whom such notice was addressed.

30.9 Transfers. Any attempt to assign, sublease, mortgage, convey, transfer, pledge, encumber or otherwise dispose of any estate or interest in this Lease, other than pursuant to express terms of this Lease, shall be void and shall not be effective

30.10 Limitation of Liability. The liability of Lessor or of any Person who has at any time acted as Lessor hereunder for damages or otherwise shall be limited to Lessor's interest in the Premises, including, without limitation, the rents and profits therefrom, the proceeds of any insurance policies covering or relating to the Premises, any awards payable in connection with any condemnation of the Premises or any part thereof, and any other rights, privileges, licenses, franchises, claims, causes of action or other interests, sums or receivables appurtenant to the Premises. Neither Lessor nor any such Person nor any of the members, directors, officers, employees, agents or servants of either shall have any liability (personal or otherwise) hereunder beyond Lessor's interest in the Premises, and no other property or assets of Lessor or any such Person or any of the members, directors, officers, employees, agents or servants of either shall be

subject to levy, execution or other enforcement procedure for the satisfaction of Lessee's remedies hereunder

30.11 No Merger. Except as otherwise expressly provided in this Lease, there shall be no merger of this Lease or the Leasehold Estate created hereby with the fee estate in the Premises or any part thereof by reason of the same Person acquiring or holding, directly or indirectly, this Lease or the Leasehold Estate created hereby or any interest in this Lease or in such Leasehold Estate as well as the fee estate in the Premises.

30.12 Lessor Release. If Lessor or any successor to its interest hereunder ceases to have any interest in the Premises or there is at any time or from time to time any sale or sales or disposition or dispositions or transfer or transfers of Lessor's interest in the Premises, the seller or transferor shall be and hereby is entirely freed and relieved of all agreements, covenants and obligations of Lessor hereunder to be performed on or after the date of such sale provided the successor owner of the Premises assumes all such obligations hereunder.

30.13 No Fee. No provision of this Lease shall create any right in Lessee or any Permitted Mortgagee to a fee interest in the Premises in any manner

30.14 Governing Law. This Lease shall be governed by, construed and enforced in accordance with the laws of the State of New York. Any legal proceedings arising out of this Lease shall be brought in the Courts located in Seneca, New York.

30.15 Mutual Termination. This Lease may be terminated prior to the expiration date upon written agreement signed by both Lessor and Lessee. The agreement shall specify the terms and conditions of such a cancellation. Lessee shall not be due any refunds for prepaid Rent for termination under this clause.

30.16 Headings. The titles to the Articles and Sections of this Lease are for convenience of reference and are not a part of this Lease and shall have no effect upon the construction or interpretation of any part of this Lease.

30.17 Notice of Lease. Upon the request of either party hereto, Lessor and Lessee agree to execute a short form Notice of Lease in recordable form, setting forth information regarding this Lease, including, if available, the dates of commencement and expiration of the Term and the options pursuant to this Lease. Upon Lessee's request, Lessor shall record such Notice of Lease. As used herein, the term "Notice of Lease" shall mean a short form notice of lease, or declaration or similar document suitable to protecting Lessee's interests hereunder the form of which will be agreed to by the parties.

IN WITNESS WHEREOF, Lessor and Lessee have executed this Lease as of the Effective Date.

LESSEE:

CITIVA MEDICAL, LLC

By: _____
Name: _____
Title: _____

LESSOR:

SENECA DEPOT, LLC

By: _____
Name: _____
Title: _____

State of
County of , ss:

On the _____ day of _____ in the year 2015 before me, the undersigned, a Notary Public in and for said State, personally appeared _____, personally known to me or proved to me on the basis of satisfactory evidence to be the individual(s) whose name(s) is/are subscribed to the within instrument and acknowledged to me that he/she/they executed the same in his/her/their capacity(ies), and that by his/her/their signature(s) on the instrument, the individual(s), or the person upon behalf of which the individual(s) acted, executed the instrument.

_____
Notary Public

State of New York
County of Monroe, ss:

On the _____ day of _____ in the year 2015 before me, the undersigned, a Notary Public in and for said State, personally appeared _____, personally known to me or proved to me on the basis of satisfactory evidence to be the individual(s) whose name(s) is/are subscribed to the within instrument and acknowledged to me that he/she/they executed the same in his/her/their capacity(ies), and that by his/her/their signature(s) on the instrument, the individual(s), or the person upon behalf of which the individual(s) acted, executed the instrument.

_____
Notary Public

Exhibit A

Legal Description of the Project

[PLEASE PROVIDE]

Exhibit B

Site Plan

[STILL REQUIRED]

May 14 , 2015

Citiva Medical LLC

Regarding: **Warner Plaza**
Hinchey Road, Rochester, NY
Hinchey road endcap unit ["Endcap Unit"]

Dear Sir:

We have been authorized to submit this Letter of Intent to enter into a lease for the above-referenced property, under the following terms and conditions:

1.	**Parties:**	**Luxor Property Management, Inc., the General Partner of MilmacB LP** ("Landlord") which has an office located at 6 Cathedral Oaks, Fairport, New York 14450 and the addressee whose name and address is stated above ("Tenant"). Landlord and Tenant are hereinafter individually referred to as a "Party" and collectively as "Parties."
2.	**Leased Premises:**	Two Thousand six hundred twenty-five (2625) square feet in the Endcap Unit which is located at Warner Plaza, Town of Gates, Monroe County, New York ("Premises"), commonly known as "Warner Plaza."
3.	**Use:**	Seller of medical products, and, for other lawful usages ("Lease Usage").
4.	**Lease Preparation:**	The Lease Agreement for the Property shall be prepared by Landlord and delivered to Tenant on or before fourteen (14) days after the execution of this Letter of Intent by the Parties.
5.	**Lease Term:**	The Term of this Lease Agreement is 10 years, commencing January 1, 2016. Tenant shall have the right to occupy the Premises in its **"as is, where is"** condition for the months **June, July, and** August for calendar year 2015 ("Occupancy Period"), provided it pays to Landlord the sum of **$2625**, on the first day of each month as an occupancy fee for each month of the Occupancy Period. At any time during the Occupancy Period, Tenant may give fourteen (14) days written notice

to Landlord that that it desires to cancel the Lease Agreement for the Lease Term.

6. **Lease Rental:** The **Base Rental** for the Lease Term shall be **$31,500** annually, **$2625** monthly, triple net.

Triple net expenses include, without limitation, a proportionate share of operating costs such as real estate taxes (including payment in lieu of taxes, Business Improvement District, Charges and Special Assessments), insurance (including without limitation Workmen's Compensation, casualty, legal liability and rental insurance), snow plowing, snow removal, salting, sealing, striping, asphalt reconstruction/repair (including milling, excavating, patching), outdoor lighting, maintenance, repairs, water, pure water, sewer and management ("Operating Costs"). Operating Costs, as additional rent, shall be paid monthly, without setoff or adjustment of any kind, as "Additional Rent".

7. **Rental Payment-Security Deposit:** One (1) month Base Rental for the **first month** of the Lease Term, one (1) month Base Rental for the last month of the Lease Term and one (1) month Base Rental as a **Security Deposit**, which shall be paid to Landlord on the date of commencement of the Lease Term.

8. **Lease Execution:** Within twenty one (21) days of **delivery of the Lease Agreement** by Landlord to Tenant.

9. **Rental Payment Commencement:** January 1, 2016.

10. **Signage:** All signs shall be approved by the Landlord and conform to governmental permitting.

11. **Condition of Premises:** Landlord at its sole cost and expense shall remove all contents currently in the Premises to the interior walls. Provided that the Tenant shall have not have cancelled the Lease Agreement within the Occupancy Period.

If the **Tenant does not exercise** its right to cancel the Lease Agreement, and Tenant accepts the Premises in its "**whereat, where is**" condition, Tenant shall have **rent free**

occupancy of the Premises for the months of **September, October, November and December** of calendar year 2015.

In addition, Tenant shall not make any alterations to the Premises without Landlord's prior written consent, which consent shall not be unreasonably, conditioned, withheld or delayed. If Tenant requests such written consent, Tenant must submit with its request a blueprint for the alterations and an executed agreement with a reputable contractor to perform the work in a prompt and workmanlike manner, at Tenant's sole cost and expense.

12. **Commission:** Landlord agrees to pay to **Flaum Management Company, Inc. a 5% brokerage** fee computed on the Base Rent payable by Tenant to Landlord for the entire Lease Term. The commission shall be paid within 30 days after expiration of the Occupancy Period provided **12.1** Landlord has received payment of the first and last month rent, security deposit and rent for the 3 month Occupancy Period, and, **12.2** Tenant executes and delivers a written Lease Agreement to Landlord, the contents of which are satisfactory to Landlord.

Neither Landlord nor Tenant has used any other broker or finder in connection with this lease transaction. Each party indemnifies and save harmless the other party against any obligation to pay a commission to any other broker or finder for services rendered in connection with the Lease Agreement.

13. **Assignment of Letter of: Intent:** This Letter of Intent may not be assigned or transferred by Tenant at any time, without the prior written consent of Landlord, which consent shall not be unreasonably conditioned, withheld or delayed.

14. **Assignment and Subletting:** The Lease Agreement shall not be assigned, sublet, mortgaged or otherwise disposed of, in whole or in part, by act of Tenant, by transfer of stock in Tenant, by operation of law, or otherwise, without the prior written consent of Landlord, which consent shall not be unreasonably conditioned, withheld or delayed.

15. **Utilities:** Tenant shall pay for all utilities which it uses on the Premises, including, but not limited to, power, heat, oil, gas, water, utilities and electricity. Such utilities shall be purchased by Tenant in Tenant's name.

Any performance dates which fall on a nationally recognized holiday or a weekend shall be extended to the next business day.

The terms set forth above constitute a suggestion for provisions of a Lease Agreement between the Parties, and that any Lease Agreement that may be negotiated between us and with respect to the Lease of the Premises will be generally consistent with the foregoing terms. This letter does not, however, create any legal rights or obligations between the Parties. It is intended that any and all legal rights and obligations between the Parties will come into existence only if and when the Lease Agreement is fully executed by both Parties. The legal rights and obligations of Tenant and Landlord will then be only those which are expressly set forth in such Lease Agreement.

If the foregoing terms are acceptable to Tenant, please sign the enclosed counterpart of this letter and return it to us. Upon receipt of such signed Letter, we will prepare for Tenant's review and approval, a Lease Agreement generally consistent with the above terms. **Both Tenant and Landlord recognize that time is of the essence. This Letter of Intent shall expire on May 19, 2015, at 5:00 p.m. Eastern Daylight Time, should the Tenant not execute and deliver a duplicate original of such Letter of Intent at such time and date to the address of the Landlord stated on the first page of this Letter of Intent.**

This Letter of Intent may be executed in any number of **counterparts**. It is not necessary that all Parties sign all or any one of the counterparts, but each Party must sign at least one (1) counterpart for this agreement to be effective.

Sincerely,

Luxor Property Management, LLC, General Partner

By: Vice Samuel R. Miller
It's President

AGREED AND ACCEPTED: May 18th, 2015

Citiva Medical LLC

By: _____
Signature of Managing Member
EIN Number:

2015
CITIVA MEDICAL LLC
LEASE AGREEMENT

Lease Agreement made as of this ____ day of June, 2015 between **Citiva Medical, LLC**, a New York limited liability company with an office at 7378 Amboy Road, Staten Island, New York10307 ("**Tenant**"), and **Milmac B LP**, a New York State Limited Partnership, by Its General Partner, Luxor Property Management, Inc, a New York State business corporation with an office for the transaction of business located at 6 Cathedral Oaks, Fairport, New York 14450 ("**Landlord**"). Landlord and Tenant are hereinafter sometimes referred to singularly as a "Party" or collectively as "Parties."

In consideration of the mutual covenants contained in this Lease, the Parties agree as follows:

1. Demised Premises. Landlord leases to Tenant and Tenant takes from Landlord premises located at 4-26 Hinchey Road, Town of Gates ("Town"), Monroe County, New York, commonly known as Warner Plaza, approximately 2677 sq. ft. of space in a Suite known as the "**West End Cap**" in Landlord's commercial building ("Demised Premises"), as shown on the Schedule "**A**" Site Plan attached hereto and made a part hereof. All areas adjacent to the Demised Premises, which are designated by the Landlord for common use or benefit of Tenants, are non-exclusive and hereinafter referred to as "Common Areas." Landlord may, at any time, construct new structures upon the Common Areas or make any changes in the plan, layout, design, area or size of the Common Areas and the lighting which it, in its sole and exclusive direction, may deem advisable. In addition, Landlord may, at any time, close a portion of the Common Areas to make necessary repairs or changes to Warner Plaza.

2. Use by Tenant. Tenant shall use and occupy the Premises solely as a seller of medical marijuana facility as permitted by the New York Medicinal Marijuana Law (as hereinafter defined) subject to the terms and conditions of this Lease or for any other purpose that complies with applicable law, rule or regulation. Tenant is responsible for obtaining all licenses and complying with all health codes required to operate a business in the Premises under the trade name of approved by the State of New York. For the purposes hereof the "New York Medicinal Marijuana Law" shall mean Chapter XIII, Part 1004 of the New York Public Heath Law (as the same may be amended from time to time and any successor statute) and the rules and regulations promulgated thereunder.

3. Term.

3.1 **Original Term**. The term of this Lease shall be ten (10) years, to commence on the Rent Commencement Date, which is hereinafter described, and ending on the tenth (10th) anniversary of the Rent Commencement Date, unless sooner terminated as provided herein.

3.3 Lease Year. The term "Lease Year" shall mean each twelve (12) month period beginning on the Rent Commencement Date and each yearly anniversary thereafter, provided the Rent Commencement Date is on the

first day of the month. If the Rent Commencement Date is on any other day than the first day of the month, then the Lease Year shall begin on the first day of the month following the end of the month during which the Rent Commencement Date occurs. Any period prior to the first Lease Year or any period subsequent to the last Lease Year within the term of the Lease, as it may be extended, shall be adjusted with respect to Annual Base Rent, Additional Rent, or any other matters or charges provided in this Lease in which the Lease Year is a factor.

3.4 **Occupancy Term**: Notwithstanding anything to the contrary contained in this Lease Agreement, Tenant shall have the right to occupy the Premises in its "**as is, where is**" condition for the months of June, July and August for calendar year 2015 ("**Occupancy Period**"), provided it pay to Landlord the sum $8021.00 on June 1, 2015. At any time during the Occupancy Period, Tenant may give fourteen (14) days written notice to Landlord that it desires to cancel the Lease Agreement for the Lease Term. Such notice must be actually received by Landlord within 5 days after it is transmitted.

4. Rent.

4.1 Original Term Rent. Tenant shall pay without setoff or adjustment of any kind, an annual base rent, which shall be paid, in advance, in equal monthly installments on the first day of each month during each Lease Year ("Lease Year") as follows:

Term	Monthly Base Rent	Annual Base Rent
Lease Term	$2677.00	$32,124.00

4.2 Operating Costs. Tenant shall pay monthly, without set off or adjustment of any kind, as additional rent, twenty-nine percent (_29_%) of the sum incurred by the Landlord for real estate taxes (including payment in lieu of taxes, Business Improvement District charges and special assessments), insurance (including, without limitation, workman's compensation and rental insurance), and other operating costs, which include, but are not limited to, snow plowing/removal, salting, sealing, striping, asphalt reconditioning/repair (including milling, excavating, surfacing, patching), outdoor lighting, maintenance, repairs, trash removal, water, pure water, sewer, and management.

4.3 Definitions.

4.4(a) The Annual Base Rent is set forth in subsections 4.1 of this Lease Agreement.

4.4(b) Additional Rent is the sub-section 4.2 Operating Costs, and all payments that the Lease requires of the Tenant, other than the Annual Base Rent.

4.4(c) Rent includes both the Annual Base Rent and Additional Rent.

4.4(d) The Rent Commencement Date shall be January 1, 2016.

4.5 No payment by Tenant or receipt by Landlord of a lesser amount than the Rent herein stipulated shall be deemed to be other than on account of the earlier stipulated Rent, nor shall any endorsement or statement on a check or letter accompanying any check or payment as Rent be deemed an accord and satisfaction and Landlord may accept such check or payment without prejudice to Landlord's right to recover the balance or pursue any other remedy as provided in this Lease Agreement.

4.6 Holdover.

4.6(a) Holdover Status. If Tenant continues occupying the Demised Premises after the Term ends ("Holdover"), without Landlord's written consent, then:

4.6(a) (i) if the Holdover is with Landlord's written consent, it shall be a month-to-month tenancy, terminable on thirty (30) days advance notice by either Party. Tenant shall pay at the beginning of each month a Monthly Base Rent that is five percent (5%) higher than the amount due in the last full month immediately preceding the Holdover period, unless Landlord specifies a lower or higher Monthly Base Rent in the written consent and any Additional Rent; and

4.6(a) (ii) if the Holdover is without Landlord's written consent, then Tenant shall be a tenant-at-sufferance. Tenant shall pay by the first day of each month 200% of the amount of Monthly Base Rent due in the last full month immediately preceding the Holdover period and any Additional Rent, in addition to Tenant's being liable for any damages suffered by Landlord because of Tenant's Holdover. Landlord shall retain its remedies against a Tenant who holds over without written consent.

4.6(b) Holdover Terms. The Holders in Paragraph 4.6(a) shall be the same terms and conditions of this Lease Agreement except:

4.6(b) (I) the Term; and the

4.6(b) (ii) Monthly Base Rent.

4.7 If an installment of Rent is not received by the tenth (10th) day of the month, a two percent (2%) late charge, together, with interest at the rate of 7% per annum, shall be due from Tenant as Additional Rent. Rent shall be paid to Landlord at 6 Cathedral Oaks, Fairport, New York 14450.

4.8 To assure Landlord that Tenant will do what Tenant is required to do under this Lease, including the payment of Rent, Tenant has deposited $2677.00 as a security deposit, which deposit shall be non-interest bearing, and is acknowledged by Landlord to have been received. If Tenant fails to do what is required of it after a 30 day notice to cure, Landlord can do those things for Tenant and use the sum of money deposited for that purpose. If the sum deposited is more than enough, the surplus will be returned to Tenant. If the sum deposited is not enough, Tenant agrees to pay any deficiency on twenty (20) days' notice. However, if Tenant does everything Tenant is required to do with respect to this Lease Agreement, the whole sum of money deposited shall be returned as soon as practical after the end of the Lease. If Landlord sells the Demised Premises, Landlord shall have the right to assign Tenant's deposit, to its purchaser; however, Landlord shall remain liable for the return of the deposit.

4.9 It is the intention of the Parties that the **Rent** be **absolutely net** to the Landlord, and not limited by any event, including a force majeure event.

4.10 Landlord and Tenant represent that no broker, finder or any other person brought this Lease Agreement and that no one is being paid a fee or other compensation on account of the making of this Lease Agreement, and no broker, finder or other person in entitled to a commission or compensation, and each Party indemnifies and agrees to defend the other harmless from and against any claim arising out of the one's own acts or conduct as the case may be for any commission or compensation relating thereto, except to Flaum Management Company, Inc., a 5% brokerage fee computed on the Base Rent payable by the Tenant to the Landlord for the entire Lease Term. The commission shall be paid within 30 days after expiration of the Occupancy Period **provided 4.10.1** Landlord has received payment of the first and last month Base Rent, security deposit and Base Rent for the 3 month Occupancy Period, and, Tenant executes and delivers a written Lease Agreement to Landlord, and, **4.10.2** the Lease Agreement is binding for the entire 10 year Lease Term.

5. Utilities. Tenant shall pay for all utilities which it uses on the Demised Premises including, but not limited to, water, power, heat, oil, gas, and electricity. Such utilities shall be purchased by Tenant in Tenant's name. Landlord has no obligation to furnish such utilities to Tenant and shall not be responsible for utility service failures.

6. Insurance.

6.1 Fire Insurance.

6.1(a) Landlord shall obtain and pay for the cost of fire and extended insurance protection for the Demised Premises. Landlord shall be entitled to all the proceeds from that insurance and Tenant shall

have no claim to those proceeds. Tenant shall not do or permit anything to be done which may invalidate any policy of insurance now or hereinafter covered on the Demised Premises, or, increase Landlord's insurance premiums or which would be a violation of the rules of the New York Fire Insurance Rating Organization. If Tenant does, Tenant shall promptly eliminate the condition resulting in such increase or Landlord may require Tenant to pay, as Additional Rent, the increase in premiums within ten (10) days of delivery of the Landlord's written request for payment.

6.1(b) Tenant, in case of fire or other casualty, shall immediately give notice to Landlord. If the building on the Demised Premises is damaged by a casualty event, to the extent that the cost of restoration, as reasonably estimated by Landlord, will equal or exceed thirty percent (30%) of the replacement value of the Building (exclusive of foundations) just prior to the occurrence of the casualty damage, then Landlord may, no later than the sixtieth (60th) day following the occurrence of the casualty damage, give Tenant notice of election to terminate this Lease. Upon termination, the term of this Lease shall end, and the accrued Rent shall be paid to the time of the casualty event. If the cost of restoration, as reasonably estimated by Landlord, amounts to less than thirty percent (30%) of such replacement value of the Building on the Demised Premises, Landlord shall rebuild or repair the Demised Premises upon receipt of the insurance proceeds and Rent shall be equitably apportioned during the period repairs are made. The Tenant shall have no claim against Landlord for losses due to damage or due to inconvenience or disruption of business or any other cause during the pre-construction and construction periods, and while repairs are being made. The words "restoration" and "restore" as used in this section shall include repairs. If the damage results from the fault of Tenant, Tenant shall not be entitled to any abatement or reduction of Rent, except to the extent, if any, that Landlord receives the proceeds of rent insurance in lieu of such Rent.

6.1(c) Tenant shall, at its sole cost and expense, procure and maintain throughout the term of this Lease, fire and extended insurance protection covering all personal property and fixtures located on or about the Demised Premises.

6.2 Liability Insurance. During the term of this Lease, the Tenant shall maintain, at its sole cost and expense, on the date this Lease is executed, general West End Cap liability insurance insuring both Landlord and Tenant against claims for bodily injury, death, or property damage, occurring upon, in or about the Demised Premises for not less than $2,000,000 for combined bodily injury and property damage. Landlord,

its managing agent and mortgagees, shall be included as "additional insureds" on Tenant's West End Cap liability insurance policy.

6.3 Blanket Insurance. At their election, the Tenant and Landlord may obtain insurance of the kind and in the amounts provided for under this Section under a blanket insurance policy or policies covering other properties as well as the Demised Premises, provided the blanket policy sets forth a separate limitation on the amount of insurance for the improvements on the Demised Premises.

6.4 Waiver of Subrogation. Landlord hereby waives any right of recovery from Tenant if the Demised Premises are damaged or destroyed by fire or any other peril included in the "all risk" (as that term is commonly defined in the insurance industry) form of insurance during the term of this Lease. Tenant hereby waives any right of recovery from Landlord if the improvements on the Demised Premises made by Tenant or Tenant's personal property therein be damaged or destroyed by fire or any other peril included in the "all risk" (as that term is commonly defined in the insurance industry) form of insurance during the term of this Lease.

Tenant shall have a waiver of subrogation clause attached to, and made a part of, its insurance policy or policies, to the extent permitted by the company providing the insurance, in the following or equivalent form:

WAIVER OF SUBROGATION CLAUSE

> This insurance shall not be invalid should the insured waive in writing, prior to a loss, any or all rights of recovery against any party for a loss occurring to the property described herein. Notice is hereby accepted that the insured has agreed in writing, prior to a loss, to waive any and all of its rights of recovery from (Landlord or Tenant as the case may be).

Notwithstanding anything to the contrary contained herein, this waiver of subrogation is limited to the amount of any loss or damage proceeds actually received by Landlord from Tenant's insurance policy.

6.5 Proof of Insurance. Tenant shall deliver to Landlord an "ACORD 28" form evidencing that it has secured the insurance coverages required to be obtained by it under this Section. **This a time of the essence matter.** Tenant shall allow Landlord to approve the identity of the insurer and the financial condition of the Tenant's insurance company, who shall have a minimum A: X by AM best or A by Standards and Poor, rating.

7. Rooftop Equipment. Only the Landlord has the right, with respect to rooftop access, to penetrations, fuel supplies, ancillary equipment, relocation, and size and weight of any rooftop dish or other equipment. Any and all maintenance or repairs to rooftop equipment must

be approved by Landlord in writing prior to commencement of any maintenance or repairs. Any access given by the Landlord to the Tenant, with respect to rooftop rights are deemed to be non-exclusive licenses. If Landlord grants written approval to Tenant, Tenant must furnish copies of all estimates and/or invoices for each rooftop incidence or occurrence so as to maintain the integrity of the roof's warranty. Upon Tenant's surrendering of the Demised Premises, or vacating the Demised Premises, the Tenant agrees to remove any rooftop equipment (and any connecting cables) and restore the roof at the end of the Term to its original condition. The Tenant agrees to indemnify the Landlord against all liability in roof damages that arise from the rooftop equipment supplied by Tenant. This covenant survives expiration or termination of this Lease Agreement.

8. Landlord's Work on Premises. Landlord shall, at its sole cost and expense, remove all contents currently in the Premises, upon the express condition that Tenant does not exercise it right to terminate this Lease Agreement as set forth in this Lease Agreement for the Lease Term.

9. Appeal Proceedings. Tenant agrees to cooperate with Landlord in connection with Landlord's protests, appeals or institution of proceedings with respect to real property taxes, assessments, embellishments, sewer and water taxes and charges, pollution, pure water or other environmental control charges, or any other governmental charges of any kind, which may become a lien upon Warner Plaza. Tenant shall be entitled to its pro-rata share of the difference between any applicable refund and the actual cost of such protest, appeal, or proceedings. If the latter results in a prospective reduction for Warner Plaza, rather than an actual refund, Tenant covenants and agrees to reimburse Landlord within 30 days after demand, as additional rent, an amount equal to Tenant's pro-rata share of such costs.

10. Repairs and Maintenance.

10.1 Interior Maintenance. Tenant has inspected the Demised Premises and agrees to accept them in their **"as is," "where is"** condition as of the Commencement Date of the Lease. Tenant shall keep and maintain the Demised Premises, interior, ordinary and non-structural in repair, which repairs shall be in quality and class equal to the original work. The Demised Premises shall be maintained by Tenant in clean condition and free from obstruction. Tenant is responsible, at its sole cost and expense, to provide heat within the Demised Premises sufficient to protect the Demised Premises, the building and utility lines from damage from the elements.

10.2 Exterior Maintenance. Tenant agrees to keep the parking area adjacent to its Demised Premises, free of debris and the walkways in front of the Demised Premises free of debris, snow, and ice. Tenant shall, at all times, maintain any sign or lettering as may be approved, in good condition and repair, and shall save Landlord harmless from injury to persons or property arising from the erection and maintenance of any such sign. Tenant agrees to repair any damage to the roof or walls of the Demised Premises resulting from the installation, use or removal of any signs.

Upon vacating the Demised Premises, Tenant agrees to remove all signs and repair all damage caused by such removal.

11. Alterations. Tenant shall not make any alterations to the Demised Premises without Landlord's prior written consent, which consent shall not be unreasonably withheld, conditioned or delayed. If Tenant requests such written consent, Tenant must submit with its request a blue print for the alterations and an executed agreement with a reputable contractor to do the work in a prompt and good workman-like manner, at Tenant's sole cost and expense. Tenant's alterations must comply with the Americans with Disabilities Act and similar laws, as well as state and local laws on disabled/handicapped access. Alterations, however, cannot increase the floor area, or affect structural components of the Demised Premises. Any permanent renovations or alterations (other than signs) made to the Demised Premises by Tenant shall immediately become the property of Landlord and shall not be removed by Tenant, unless Landlord, in its sole discretion, directs Tenant to remove the alterations and restore the Demised Premises to the condition existing prior to the Lease Commencement Date.

12. Signs and Showings.

12.1 Signs. Landlord has the right to control all exterior signage, size, type and location (including the name of the building, any flag pole, and rights to install plaques or other identification). All signs shall be black lit channel letters with black faces and otherwise compatible with existing signage design. Landlord has the right to require Tenant to provide one (1) exterior signage on the exterior of the building. Signage can only advertise the operation at the Demised Premises; it cannot advertise the Tenant's products or services generally. Tenant erection of a sign on the building of which the Demised Premises are a part is contingent upon:

12.1(a) Tenant's receiving Landlord's written consent to its form and content; and

12.1(b) prior to the erection of the signage, Tenant's receiving a permit from the Town and any other jurisdiction in New York State requiring signage approval.

12.2 Showings. Landlord has the right to show, at any time, the Demised Premises to perspective purchasers, mortgagees or appraisers, and post "for sale" signs on the Demised Premises. During the last twelve (12) months of the Original Term, as the case may be, the Landlord shall have the right to show the Demised Premises to perspective Tenants and post "for rent" signs.

13. Compliance with the Law, Other Than Environmental. In its use and occupation of the Demised Premises, Tenant shall comply with all present and future laws, ordinances, rules, regulations or requirements of all federal, state or municipal governments and every department or bureau thereof applicable to the Demised Premises, except to the extent that such requirements would necessitate wall or roof improvements to the Demised Premises.

14. Compliance with Environmental Laws. Tenant agreed to comply with all present and future environmental laws, regulations and guidelines, relating to the operation of Tenant's business on the Demised Premises. In addition, Landlord may make any changes in the Demised Premises to become or remain in compliance with all such environmental laws, regulations or guidelines. Tenant shall bear the expense of any ordinary or nonstructural changes made under this section.

In addition, Tenant agrees to take all actions required now or in the future by the New York State Department of Environmental Conservation or any other agency, with regard to all environmental matters. If Tenant fails to take such action as is required by this section within ten (10) days after receiving notice of such failure from Landlord, Landlord may take such action and shall be entitled to indemnification by Tenant for all damages, costs or expenses Landlord may incur or suffer in doing so.

14.1 Indemnification and Hold Harmless. Tenant shall indemnify and hold Landlord and Landlord's representatives, successors and assigns, harmless against all claims, liabilities, penalties, expenses, fines, settlements and costs, including reasonable attorneys' fees, costs of investigation and testing, lost profits and other damages, that Landlord may suffer as a result of any actions or proceedings based on Tenant's failure to comply with all environmental laws, regulations and guidelines, in its operation of the Demised Premises during the term of this Lease, regardless of when the law, regulation, or guideline on which the action or proceeding is based comes into existence (collectively the "Environmental Liabilities");

14.2 Right to Inspect. Tenant agrees that Landlord or its agents or representatives may, at any reasonable time and at Tenant's expense inspect Tenant's environmental records and inspect and conduct any tests on the Demised Premises including taking soil samples in order to determine whether Tenant is in continuing compliance with all environmental laws and regulations;

14.3 Tenant's Obligations to Take Remedial Action. If any environmental contamination or other environmental problems are found on the Demised Premises for which any response or other removal, remedial or other type of action (other than roof or wall changes) is required pursuant to law, ordinance, order, rule, regulation or governmental action, Tenant agrees that it will at its sole cost and expense take such action promptly and to Landlord's satisfaction;

14.4 Indemnification as Additional Rent. Any expenses incurred by Landlord for which Landlord is entitled to indemnification from Tenant under this Agreement, shall be treated as Additional Rent; and

14.5 Survival. This indemnification shall survive termination or expiration of this Lease Agreement.

15. Indemnification, Other than Environmental. Tenant shall indemnify Landlord against any and all liabilities, obligations, damages, penalties, claims, costs, judgments, suits,

causes of actions, charges and expenses, including, without limitation, reasonable fees of architects, engineers and attorneys, which may be imposed upon, incurred by or asserted against Landlord because of any of the following:

15.1 Any work or thing done or omitted to be done in, on or about the Demised Premises by, through or under Tenant;

15.2 Any use, non-use, possession, occupation, condition, operation, maintenance or management of the Demised Premises, or any adjacent alley, sidewalk, curbs, passageway or space;

15.3 Any act or omission of Tenant or any of its agents, servants, contractors, employees, subtenants, licensees, franchisees or invitees;

15.4 Any accident, injury or death to any person or damage to any property occurring in, on, or about the Demised Premises or any adjacent alley, sidewalk, curb, passageway or space; or

15.5 Any failure by Tenant to perform or comply with any of the covenants, agreements, terms, provisions, conditions or limitations in this Lease.

All of which are hereinafter referred to as "Claims."

15.6 If any action or proceeding is brought against Landlord because of any one or more of the Claims, Tenant, at its sole cost and expense, upon written notice from Landlord, shall defend that action or proceeding by counsel approved by Landlord in writing. Landlord shall not be responsible or liable for any injury or death to any person or persons or for any damage to any property, fixtures, buildings or other improvements, on or about the Demised Premises. Any judgment against Landlord on any Claim shall be immediately discharged by Tenant.

15.7 Indemnification as Additional Rent. Any expenses incurred by Landlord for which Landlord is entitled to indemnification from Tenant under this Agreement, shall be treated as Additional Rent.

15.8 Survival. This Section shall remain in full force and effect until the latter of:

15.8(a) the expiration of the period stated in the applicable statute of limitations during which a Claim or cause of action may be brought; or

15.8(b) the satisfaction of such Claim or cause of action and all expenses incurred by Landlord.

16. Assignment or Subletting. This Lease shall not be assigned, sublet, mortgaged or otherwise disposed of, in whole or in part, by act of Tenant, by transfer of stock in Tenant, by operation of law, or otherwise ("Disposition"), without the prior written consent of Landlord, which consent shall not be unreasonably withheld or delayed. For purposes of this Section, a

Disposition shall include any merger or consolidation of Tenant and any transfer, sale, assignment, pledge, or other encumbrance, whether voluntary or involuntary or by operation of law, of more than forty-nine percent (49%) of the equity of Tenant, whether by one or several transactions (the "Claims"). It is a condition precedent of any assignment or subletting that Tenant shall remain primarily liable for the payment of Rent and the performance of this Lease Agreement.

17. Default.

17.1 Events of Default. Any one or more of the following events shall constitute an event of default (an "event of default")

17.1(a) Tenant's failure to pay any Rent when due and payable, deliver or maintain insurance coverages, deliver or maintain service contracts specified in this Lease, or failure to comply with health codes, and, the continuation of any such failure for ten (10) days after notice;

17.1(b) Tenant's failure to observe and perform any of the terms, covenants, conditions, limitations or agreements under this Lease on Tenant's part to be observed or performed (except the obligations specified in paragraph 17.1(a) of this Lease), and the continuation of the failure for a period of thirty (30) days after notice from Landlord specifying the nature of the failure, provided that if Tenant commences the cure of such condition, with in thirty (30) days, such time period shall be reasonably extended for so long as Tenant diligently prosecutes such cure;

17.1(c) Tenant shall file a voluntary petition in bankruptcy or shall be adjudicated a bankrupt or insolvent, or shall file any petition or answer seeking any reorganization, arrangement, composition, readjustment, liquidation, dissolution or similar relief under the present or any future federal bankruptcy code or any other present or future federal, state or other bankruptcy or insolvency statute or law (collectively the "insolvency laws"), or shall seek, consent to or acquiesce in the appointment of any bankruptcy or insolvency trustee, receiver or liquidator of Tenant or of all or any substantial part of its properties or of the Demised Premises;

17.1(d) The commencement of any action, case or proceeding ("proceeding") against Tenant seeking (i) any reorganization, arrangement, composition, readjustment, liquidation, dissolution or similar relief under any insolvency laws, or (ii) the appointment, without the consent or acquiescence of Tenant, of any trustee, receiver or liquidator of Tenant or of all or substantially all of its properties or of the Demised Premises, and the proceeding shall continue undismissed for a period of sixty (60) days;

17.1(e) Tenant abandons the Demised Premises (physical absence from the Demised Premises for more than one (1) month) or vacates the Demised Premises); or

17.1(f) Tenant breaches the covenant to assign or sublet, in whole or in part.

17.2 Remedies on Default.

17.2(a) Termination of Lease. Upon the occurrence of any one or more events of default, Landlord may, at its option, at any time thereafter, give written notice to Tenant specifying the event or events of default and stating that this Lease and the term demised shall expire and terminate on the date specified in the notice, which shall be at least ten (10) days after the giving of the notice, within which time Tenant shall have the right to cure the default or defaults, and if cured, this Lease shall continue in full force and effect with respect to the Demised Premises (the "Terminated Premises"). If the defaults are not cured within the ten (10) day period, this Lease and the term demised and all rights of Tenant under this Lease shall expire and terminate with respect to the Terminated Premises. The expiration or termination of this Lease by Landlord with respect to the Terminated Premises shall not relieve Tenant of its liability and obligations under this Lease, which shall in any event survive.

17.2(b) Dispossession of Tenant. Upon termination of this Lease with respect to the Terminated Premises pursuant to this section or otherwise, Tenant shall quit and peacefully surrender the Terminated Premises to Landlord. Landlord, shall have the right, upon, or at any time after, the expiration or termination of this Lease with respect to the Terminated Premises, and without additional notice or without prejudice to any other rights and remedies it shall have at law or in equity,

17.2(b) (i) to re-enter the Terminated Premises, and remove from them from Tenant, its agents, employees, servants, licensees, and subtenants and other persons, firms or corporations and all or any of its or their property, either by summary dispossess proceedings or by any suitable action or proceeding at law or in equity, or by force or otherwise, without being liable to indictment, prosecution or damages for such action;

17.2(b) (ii) to repossess and have, held and enjoy the Terminated Premises;

17.2(b) (iii) to receive all Rent and other monies from the Terminated Premises; and

17.2(b) (IV) Tenant excuses Landlord from any obligation to prove ownership or succession in any legal or equitable proceeding.

Notwithstanding anything set forth in this Lease to the contrary, Landlord acknowledges that its right of reentry into the Demised Premises set forth in this Lease do not confer on it the authority to manufacture and /or dispense on the Demised Premises medical marijuana in accordance with Article 33 of the Public Heath Law, and Landlord agrees to provide the New York State Department of Health, Mayor Erastus Corning 2d Tower, the Governor Nelson A. Rockefeller Empire State Plaza, Alban, New York, 12237, with notification by certified mail of its intent to reenter the Demised Premises or to initiate dispossess proceedings or that the Lease is due to expire, at least 60 days prior to the date on which the Landlord intents to exercise a right of reentry or to initiate such proceedings or at least 60 days before expiration of the Lease.

17.2(c) Reletting Demised Premises-Recovering Future Rents. Upon Landlord's Termination of Lease or Dispossession of Tenant by summary proceedings or otherwise:

17.2(c) (i) Tenant shall nevertheless continue to pay to Landlord at the same time as Rent becomes payable under the terms of this Lease, a sum equivalent to the Rent, due hereunder. Landlord's acceptance of Rent after giving notice of termination constitutes merely a payment on account of sums due Landlord.

17.2(c)(ii) Landlord at any time and from time to time may relet the Terminated Premises or any part or parts thereof, either in the name of Landlord or otherwise, for a term or terms which may, at Landlord's option, be less than or exceed the period which would otherwise have constituted the balance of the term of this Lease, without releasing the Tenant from any liability hereunder, with respect to the Terminated Premises and on such conditions as Landlord, in its sole discretion may reasonably determine, and Landlord may collect and receive all Rents and monies from such reletting, applying any monies collected first to the expenses of resuming or obtaining possession, second to restoring, improving and/or altering the

Demised Premises for rental, and then to the payment of Rent. Tenant shall be responsible for any deficiency and not be entitled to any surplus.

17.2(c) (iii) Landlord shall not be responsible or liable for any failure or refusal to relet the Terminated Premises or any part of them, or for any failure to collect any rent due upon any reletting of them, or to mitigate damages.

17.3 Damages.

17.3(a) Whether or not the Terminated Premises or any part of them shall have been relet, Tenant with respect to the Terminated Premises shall be liable to and shall pay Landlord as and for liquidated and agreed current damages (the "current damages") for Tenant's default:

17.3(a)(i) the amount of Rent which would have been payable under this Lease by Tenant with respect to the Terminated Premises as if the Lease were still in effect for the balance of the Lease Term;

17.3(a) (ii) the expenses and costs incurred by Landlord in maintaining or removing goods stored at the Terminated Premises; and

17.3(a)(iii) the expenses and costs incurred by Landlord in repossessing and reletting the Terminated Premises, including, without limitation, all repossession costs, brokerage and management commissions, operating expenses, legal expenses, attorneys' fees, alteration costs, and expenses of preparation for reletting.

Additional Rent shall be calculated at the amount due Landlord for the prior Lease Year.

17.3(b) Landlord shall be entitled to recover the current damages from Tenant, by separate action, actions or proceedings.

17.4 This Section shall survive any termination, expiration or cancellation of this Lease by the Parties or as a result of any statute, law, order or warrant.

17.5 Landlord may, at its option, from time to time, commence actions to recover any installment or installments of Rent, or liquidated damages, or other damages and nothing in this Lease shall be deemed to require Landlord to await the date this Lease would have expired had there been no default by Tenant or no termination by Landlord.

17.6 Landlord shall have no obligation to mitigate damages.

17.7 The foregoing rights and remedies given to Landlord are and shall be deemed to be cumulative, and the exercising of any right or remedy shall not be deemed to be an election excluding Landlord's exercise at any time of a different or inconsistent remedy, and shall be deemed to be given to said Landlord in addition to any other rights granted to Landlord by the terms of this Lease Agreement, or by law or equity. The failure of Landlord at any time to exercise any right or remedy herein granted or established by law shall not be deemed to operate as a waiver of its right to exercise such right or remedy at any future time.

18. Right of Redemption. **Tenant hereby waives all right of redemption, re-entry, or repossession to which Tenant or any person claiming under Tenant might be entitled by any law now or hereafter in effect.**

19. Landlord's Liability. Landlord shall not be liable for any damage caused by water, rain, snow or ice or by breakage, stoppage or leakage of water, gas, heating, or sewer pipes in, upon or adjacent to the Demised Premises. Landlord shall not be liable for loss of property by theft or otherwise. Notwithstanding anything to the contrary contained in this Lease, the term "Landlord" as used throughout this Lease, so far as the covenants and agreements on the part of Landlord are concerned, shall be limited to mean and include only the then owner or owners of the Demised Premises. In the event of any transfer of title to the Lease or to the Demised Premises, the Landlord named herein (and in case of any subsequent transfer, the then grantor) including each of its partners, beneficiaries, shareholders or principals as the case may be, shall automatically and without further act be freed and relieved from and after the date of such transfer from all obligations of the "Landlord" under this Lease and from all liability with respect to the performance of any covenants or agreements to be performed by the "Landlord" under this Lease.

20. Reimbursement for Breach. If Tenant breaks any promise or fails to act in accordance with this Lease, Tenant agrees to reimburse Landlord for and to pay any expenses incurred by Landlord, including but not limited to all court, and collection costs and disbursements, plus reasonable attorneys fees and as well as all other sums due Landlord under this Lease.

21. Fees and Expenses. In addition, Tenant agrees to reimburse the Landlord for all costs and expenses incurred in connection with any litigation the Tenant commences provided:

21.1 The Landlord is acting as a witness in any proceeding involving the Lease of the Tenant;

21.2 The Landlord reviews anything that the Tenant asks the Landlord to review or sign;

21.3 Any lien filing, even if the lien filing does not constitute an event of default;

21.4 It results in Bankruptcy proceedings;

21.5 Landlord obtains a Subordination Non-Disturbance and Attornment Agreement for the Tenant ("SNDA"); or

21.6 Landlord's evaluating Tenant request for an amendment or waiver.

22. Surrender of Lease. Tenant shall surrender the Demised Premises at the expiration or earlier termination of this Lease in the condition existing as of the commencement date of this Lease, ordinary wear and tear alone excepted. If Tenant fails to remove any of its personal property from the Demised Premises within fifteen (15) calendar days after the expiration or earlier termination of this Lease, the property shall be deemed abandoned by Tenant and shall be removed and stored at Tenant's expense, unless the Landlord elects to retain or discard the personal property. Tenant shall pay to Landlord the cost of repairing any damage caused to the Demised Premises by reason of Tenant's removal of its personal property from the Demised Premises.

23. Access by Landlord. **Landlord shall, at all reasonable times, upon reasonable prior notice have access to the Demised Premises for purposes of repairs, but only provided that such access complies with the New York Medicinal Marijuana Law. During emergencies, subject to the Medicinal Marijuana Law only, Landlord shall have immediate access to the Demised Premises. Notwithstanding the foregoing or any other provision contained in this Lease to the contrary, except in cases of emergency requiring immediate entry to such areas of the Demised Premises, Landlord shall not have access to any portion of the Demises Premises which is not open to the general public or where any medicinal marijuana may be stored, or any other area of the Demised Premises that are restricted by the Medicinal Marijuana Law or which may contain health information protected by any laws, rules or regulations enacted to protect individual's medical records and other personal health information (collectively, "Privacy Laws ") except in the presence of an authorized representative of Tenant, in compliance with Privacy Laws and having previously satisfied the requirement of Tenant's internal policies implemented in accordance with Privacy Laws. Landlord further agrees that access to the Premises shall be subject to, and in compliance with laws governing the operation of Tenant's business, including any restrictions or limitations on accessing or handling medical marijuana. Notwithstanding anything set forth above to the contrary, Tenant shall not be required to provide, and Landlord shall not be entitled to have access to the Premises except in full compliance with the New York Medicinal Marijuana Law.**

24. Entry onto or inspection of the Demised Premises does not constitute an actual or constructive eviction and does not entitle Tenant to any rights or remedies, or any claim, offset, deduction or abatement of Rent.

25. Quiet Enjoyment. So long as Tenant pays the Rent and abides by its obligations under this Lease by not being in default, Tenant may peaceably and quietly have, hold and enjoy the Demised Premises for the term of this Lease, subject to the rights of mortgagees, ground lessors, other tenants, matters of record and all other terms of this Lease.

26. Subordination. This Lease is and shall be subordinate to the lien of any mortgage or mortgages now or hereafter placed upon the Demised Premises or any part thereof by Landlord, without the necessity of any further instrument or act on the part of the Tenant to effectuate such subordination. Tenant agrees to execute and deliver, upon demand and without cost, such further instrument or instruments evidencing such subordination as may be Demised

by any owner of the Demised Premises, or by any mortgagee or prospective mortgagee. In addition, Tenant agrees to execute any SNDA form required by Landlord's lenders.

27. Lien Discharge. Tenant shall not create or permit to be created and shall promptly, but no later than thirty (30 days after its filing, discharge or bond any mechanic's, laborer's, or materialman's lien, or any other charge which might be or become a lien, encumbrance or charge upon the Demised Premises, or any part of either ("the lien"). Nothing in this Lease shall be construed as the consent or request of Landlord, express or implied, by inference or otherwise, to any contractor, subcontractor, laborer or materialman for the performance of any labor or the furnishing of any materials for any improvement, alteration or repair of the Demised Premises, or any part of either.

28. Tenant's Covenants.

28.1 Tenant agrees to cooperate in a timely manner, as necessary, to help the Landlord qualify for any available tax or tax assessment reduction, tax assessment, or governmental benefits (such as tax abatements).

28.2 Tenant shall provide Landlord with the name, telephone number and e-mail address of an emergency contact, which may be changed by Tenant by complying with the notice provisions of this Lease Agreement.

28.3 Tenant must assert any claim it has against Landlord within ninety (90) days of the date the Tenant first became aware of any facts supporting Tenant's claims.

28.4 If the Landlord protests real estate taxes, a reasonable extra management fee is due for its time, travels, and efforts.

28.5 The Tenant can protest real estate taxes only with the written consent of Landlord.

28.6 Tenant agrees to any reasonable modification that Landlord's mortgagee may request, provided it does not materially reduce Tenant's rights or increase its financial obligations.

28.7 The Tenant agrees to keep the non-public terms of this Lease Agreement confidential, subject to applicable laws, rules, and regulations, provide that Tenant may be entitled to disclose same in connection with the requirement of the New York Medicinal Marijuana Law. And its application for a license thereunder or otherwise for a legitimate business purpose.

28.8 Tenant acknowledges that Landlord's covenants are independent and waives any right to terminate based on Landlord's default.

29. Landlord's Right to Perform Tenant's Obligations. If Tenant shall fail to perform any of its obligations under this Lease, Landlord may, at its option, after Thirty (30) days' notice to Tenant, or without notice in case of an emergency, perform any of such obligations subject in

all cases to the New York Medicinal Marijuana Law. Any moneys paid and all costs and expenses incurred by Landlord, including reasonable attorneys fees, in the performance of Tenant's obligations under this Lease, together with interest at 7% per annum, shall be payable to Landlord as Additional Rent on demand.

30. Governing Law. This Lease and the performance of it shall be governed, interpreted, construed and regulated by the laws of the State of New York.

31. New York Medicinal Marijuana Law Generally. **Notwithstanding anything contained herein to the contrary, Landlord acknowledges 30.1 that Tenant will be engaged in activities that are considered to be unlawful under federal laws relating to controlled substances; and 30.2 although the State of New York has adopted an overall regulatory framework that permits Tenant's proposed activities on the Demised Premises, the regulatory framework is still evolving and that Tenant's failure to comply with New York laws and regulations relating to controlled substances shall not constitute a violation of this Lease to the extent that such law and regulations and 30.2.1 are ambiguous, unclear or incomplete. In addition Landlord acknowledges that Landlord's right and remedies under this Agreement are subject to the provision of the New York Medicinal Marijuana Law. To the extent that there is a conflict between the terms of this Agreement and the applicable provisions of the New York Medicinal Marijuana Law, the New York Medicinal Marijuana Law shall govern.**

32. Partial Invalidity. If any term, covenant, condition or provision of this Lease, or the application thereof to any person or circumstance, shall be invalid or unenforceable, the remainder of this Lease, or the application of that term or provision to persons or circumstances other than those as to which it is held invalid or unenforceable, shall not be affected and every other term, covenant, condition and provision of this Lease shall be valid and be enforced to the fullest extent permitted by law.

33. Waiver of Jury Trial and Counterclaims. The Parties waive a trial by jury of any and all issues in any action or proceeding between them connected with, or arising out of their Landlord/Tenant relationship and/or the Demised Premises.

34. Eminent Domain. If all or any part of the Demised Premises shall be taken or condemned by eminent domain or any other condemnation proceeding, all proceeds shall belong to the Landlord without deduction therefrom for any estate vested in Tenant. If such taking shall result in Tenant's inability to conduct its business at the Demised Premises, this Lease shall terminate with respect to the Demised Premises condemned or taken as of the date of such taking. If after such taking Tenant can or is able to operate its business, the rent due under this Lease shall be equitably apportioned.

35. Personal Liability. Anything to the contrary contained in this Lease notwithstanding, the covenants contained in this Lease to be performed by Landlord shall not be binding personally on the Landlord, its partners, members, managers, officers, directors and affiliates, but instead such covenants are made for the purpose of binding only whatever equity the Landlord would have if it had entered into a mortgage securing financing equal to 80% of the

value of the Demised Premises. It is understood that in no event shall the Tenant have any right to levy execution against any other property of Landlord.

36. Entire Agreement. This Lease Agreement constitutes the entire agreement between the Parties hereto relating to said Landlord/Tenant relationship and the Demised Premises and supersedes all prior oral or other agreements and representations.

37. Changes to be Required in Writing. No provision hereof may be terminated, amended, or waived, other than in writing signed by the Party against whom enforcement of such change is sought.

38. Waiver. The failure of Landlord to insist upon a strict performance of any of the terms, conditions and covenants herein, shall not be deemed any future waiver of any rights or remedies that the Landlord may have.

39. Notices. Any notice or demand required under this Lease shall be delivered:

37.1 Personally, or by certified mail, return receipt requested, to the addresses stated at the beginning of this Lease Agreement, or to such other address which Landlord or Tenant shall designate in writing to the other. If the notice is delivered by mail, it shall be effective on the date of mailing, except a notice changing the mailing address which shall be effective upon receipt; or

37.2 by e-mail or facsimile provided the sender keeps a confirmation sheet or print out and delivers a paper copy of the same notice to the recipient by overnight delivery (the next business day). The overnight delivery copy confirms the notice, but the notice becomes effective when faxed or e-mailed.

40. Marginal Notations. The marginal notations in this Lease are included as a convenience only, and shall not be taken into consideration in construction or interpretation of this Lease or any of its provisions.

41. Successors and Assigns. Except as otherwise provided in this Lease, this Lease shall benefit and bind the Parties, their distributees, successors, assigns and personal representatives.

42. IN WITNESS WHEREOF, the Parties have executed this Lease which will be deemed effective on the day and year first above written.

LANDLORD: **LUXOR PROPERTY MANAGEMENT, INC.**

By: _____

Its: President

TENANT: _____

By: _____

Its: _____

Employer Identification Number: _____

STATE OF NEW YORK)
COUNTY OF MONROE) ss.:

On the _____ day of June, in the year 2015 before me, the undersigned, a Notary West End Cap in and for said State, personally appeared Joseph P. Merlo, personally known to me or proved to me on the basis of satisfactory evidence to be the individual whose name is subscribed to the within instrument and acknowledged to me that he executed the same in his capacity, and that by his signature on the instrument, the individual, or the person upon behalf of which the individual acted, executed the instrument.

_____
Notary

STATE OF _____)
COUNTY OF _____) ss.:

On the _____ day of September in the year 2015 before me, the undersigned, a Notary West End Cap in and for said State, personally appeared _____, personally known to me or proved to me on the basis of satisfactory evidence to be the individual whose name is subscribed to the within instrument and acknowledged to me that he executed the same in his capacity, and that by his signature on the instrument, the individual, or the person upon behalf of which the individual acted, executed the instrument.

_____
Notary West

250 S. Clinton Street, Suite 201
Syracuse, NY 13202
(315) 299-6292
www.TheIconCompanies.com

April 27th, 2015

To: Asher Flaum

ACV Associates LLC, is willing to enter into a Lease with Citiva Medical, LLC for the premises located at 5788 East Circle Drive, Cicero NY 13039 based on the terms listed below.

Premises:	5788 East Circle Drive, Cicero, NY 13039
Area:	Approximately 2,122 Square Feet on Approximately .96 acres
Tenant:	Citiva Medical, LLC
Lease Term:	5 Years, 6 Months
Lease Type:	Triple Net - NNN
Rent:	Months 1-3, $2,000; Months 4-6, $2,250 and $2,700 per Month thereafter
Options:	Two (2) 5-Year Options
Rent Increases:	Yearly at 2.5 % of base rent
Lease Commencement:	Upon Execution
Rent Commencement:	May 1st, 2015
Termination:	Tenant has the right to terminate the Lease at its sole discretion at any time during the first 4 months with 30 days written notice to Landlord via certified Mail RRR.
Landlord Work:	N/A, Space to be taken in as is condition
Free Rent:	Month 7
Deposit:	$ 6,000.00 (Month's 1-3)

Sincerely,

Tyler Rombough
The Icon Companies

Agreed:

5/1/2015

ACV Associates LLC Date

4/29/15

Citivs Medical LLC Date

LEASE

BY AND BETWEEN

ACV ASSOCIATES LLC,

LANDLORD

AND

CITIVA MEDICAL, LLC,

TENANT

Lease for Premises at:
5788 East Circle Drive
Cicero, NY

May __, 2015

LEASE
Article 1.

Reference Data

1.1. Introduction and Subjects Referred To.

This is a lease (this **"Lease"**) entered into by and between ACV ASSOCIATES LLC,, a NY limited liability company **("Landlord")**, and CITIVA MEDICAL, LLC, a New York limited liability company **("Tenant")**. Each reference in this Lease to any of the following terms or phrases shall be construed to incorporate the corresponding definition stated in this Section 1.1.

Date of this Lease	May __, 2015
Building and Property	That building in the Township of Cicero, NY, located at 5788 East Circle Drive, (the **"Building"**). The Building and the land parcels on which it is located are hereinafter collectively referred to as the **"Property"**. The Building consists of approximately 2,122 +/- leasable square feet and the land parcels on which it is located consist of approximately .96 acres.
Premises:	The Building as shown on Exhibit A hereto and known as 5788 East Circle Drive Cicero, NY
Premises Rentable Area:	Approximately 2,122 +/- leasable square feet
Initial Term:	May 1, 2015 to August 31, 2015 (subject to termination as provided in Section 2.2(b) (the "Initial Term")
Option to Renew	Tenant shall have two (2) successive options to renew for five (5) years each.
Commencement Date:	June 1, 2015
Tenant's Percentage:	100%
Permitted Use:	Principally and primarily for use as a medical marijuana facility as permitted by the NY Medicinal Marijuana Law (as hereinafter defined) subject to the terms and conditions of this Lease or for any other purpose that complies with applicable law, rule or regulation.
Commercial General Liability Insurance Limits:	$1,000,000 per occurrence (combined single limit) for property damage, bodily and personal injury and death.

Original Address of Landlord:	14 Oak Ridge Road, Woodland Park, NJ 07424
Original Address of Tenant:	Citiva Medical, LLC 7378 Amboy Road Staten Island, NY 10307
Security Deposit:	N/A
Fixed Rent:	Tenant shall pay $6,000.00 as an up-front payment for rent for months 1-3 at $2,000 per month (June, July and August, 2015). For months 4-6 Monthly Fixed Rent shall be $2,250.00 (September, October and November, 2015), $0.00 shall be payable as Monthly Fixed Rent for December, 2015 and $2,700.00 shall be payable as Monthly Fixed Rent thereafter commencing January 1, 2016, subject to annual increases on the 1st anniversary date (June 1, 2016) and every anniversary date thereafter as provided in Section 4.2 below.

"Lease Year": Any twelve-(12)-month period during the Term of the Lease commencing as of the Commencement Date or as of any anniversary of the Commencement Date, except that if the Commencement Date does not fall on the first day of a calendar month, then the first Lease Year shall begin on the first day of the month following the Commencement Date and end on the last day of the month containing the first anniversary of the Commencement Date, and each succeeding Lease Year shall begin on the day following the last day of the prior Lease Year.

1.2 Exhibits

EXHIBIT A. Plan showing the Premises.

Article 2.
Premises and Term

2.1 Premises. Landlord hereby leases to Tenant (on an exclusive basis) and Tenant hereby leases from Landlord the following described premises: 5788 East Circle Drive Cicero, New York consisting of a free-standing building of approximately 2,122 square feet on .96 acres of land.

2.2 Term/Termination Option/Renewal Options.

(a) The term of this Lease shall be for a period beginning on the Commencement Date June 1, 2015 (as defined in Section 3.1) The term of this lease shall be 5 years and 6 months commencing on June 1, 2015 Commencement Date and ending on November 30, 2020.

(b) Initial Term. At any time during from June 1, 2015 to November 30, 2015, Tenant has the right to terminate the Lease at its sole discretion at any time by providing Landlord with at least 10 days' written notice via certified mail RRR.

(c) Option to Renew Lease. Providing Tenant is not then in material breach or default of the terms of this Lease after applicable notice and cure period, Tenant is granted the option to renew this Lease for two (2) additional five (5) year terms.

The first five (5) year option term shall commence on December 1, 2020 and shall end on November 30, 2025.

The second five (5) year option term shall commence on December 1, 2025 and shall end on November 30, 2030, 2030.

In anticipation of any Option to renew lease, Tenant must notify Landlord that Tenant will not be exercising Tenant's option to renew by giving Landlord written notice by certified mail RRR or personal delivery at least six (6) months prior to the end of the lease term or subsequent option(s), Time is hereby made of the essence. Should Tenant fail to notify Landlord that Tenant shall not exercise its option to renew Lease at least six (6) months prior to the end of the lease term or any option period(s) it shall be deemed by Landlord as Tenant's election not to to exercise its option to renew the Lease for the next option period.

Article 3.
Commencement and Condition

3.1 Commencement Date. The Commencement Date shall be June 1, 2015 the date set forth in Section 1.1, Without limiting the foregoing, Landlord and Tenant expressly waive the provisions of Section 223-a of the Real Property Law and agree that the foregoing is intended to constitute an express "provision to the contrary" within the meaning of said Section 223-a. Notwithstanding the foregoing, the Premises shall be vacant, broom clean and otherwise in the manner set forth in this Lease on the date of this Lease.

3.2 Condition of Premises. Landlord and tenant agree Premises are being leased on an "as is" condition.

Article 4.
Rent, Additional Rent, Insurance and Other Charges

4.1 The Annual Fixed Rent. The Tenant agrees to pay Monthly Fixed Rent in the amounts set forth in Section 1.1 above. All rent payments shall be paid by Tenant directly to Landlord. All payments of Monthly Fixed Rent shall be due on the 5th day of each month.

4.2 Rent Increases. Tenant agrees to pay Landlord a yearly rent increase equal to 2.5% of the previous year's base rent. It is agreed that every June 1, commencing June 1, 2016, the base rent shall increase by 2.5% and said 2.5% base rent increase shall also apply to any option period/s. Tenant agrees that the base rent on June 1, 2015 shall be considered to have been $2,700.00 per month. Yearly increase may be rounded up or down to nearest dollar.

4.3 Late Charges, Returned Check Fees, Court Costs, Attorney Fees, and Attorney Collection Fees. Any late charges, returned check fees, court costs or reasonable attorney fees incurred by Landlord as a result of Tenant's breach of Lease shall be paid by Tenant as additional rent due and payable within thirty (30) days of notice thereof. Tenant shall pay a late charge of THREE PERCENT (3 %) for any rent payment not received by the Landlord by the fifth (5th) day of any month and within five (5) days of Tenant's receipt of notice of such failure.

4.2 Additional Rent. Commencing as of the Commencement Date, Tenant shall pay to Landlord, as Additional Rent, and all other charges and amounts payable by or due from Tenant to Landlord (all such amounts referred to in this sentence being **"Additional Rent"**).

4.4 Personal Property and Sales Taxes. Tenant shall pay all taxes charged, assessed or imposed upon the personal property of Tenant and all taxes on the sales of inventory, merchandise or other goods or

services by Tenant in, upon, or from the Premises.

4.5 Insurance. **[TENANT'S INSURANCE CONSULTANT TO REVIEW.]** Tenant shall, at its expense, take out and maintain, throughout the Term of this Lease (commencing on possession of the Premises), the following insurance:

4.5.1 Commercial general liability insurance (on an occurrence basis and on a 1988 ISO CGL form or its equivalent, including without limitation, broad form contractual liability, bodily injury, property damage, fire legal liability, and products and completed operations coverage) under which Tenant is named as an insured and Landlord as additional insured as its interests may appear, in an amount which shall be at least equal to the Commercial General Liability Insurance Limits; Worker's compensation insurance with statutory limits covering all of Tenant's employees working on the Premises; and So-called "special form" property insurance on a "replacement cost" basis with an agreed value endorsement covering the premises (building) all furniture, furnishings, fixtures, plate glass, and equipment and other personal property brought to the Premises by Tenant and all improvements and betterments to the Premises performed at Tenant's expense.

4.5.2 All such policies shall contain a clause confirming that such policy and the coverage evidenced thereby shall be primary with respect to any insurance policies carried by Landlord and shall be obtained from responsible companies qualified to do business and in good standing in the State of New York and shall have a general policy holder's rating in Best's of at least A+ X. A certificate (on ACORD Form 27 or its equivalent) of the insurer, certifying that such policy has been issued and paid in full, providing the coverage required by this Section and containing provisions specified herein, shall be delivered to Landlord prior to the commencement of the Term of this Lease and, upon renewals, not less than thirty (30) days prior to the expiration of such coverage. If any of the above described policies cancel before the expiration date thereof, notice will be delivered in accordance with policy provisions. Tenant shall not cancel, terminate or reduce coverage in any of the above policies without providing Landlord at least thirty (30) days' prior written notice thereof. In the event of such Tenant cancellation, Tenant shall procure and pay for replacement of such insurance and deliver to Landlord and any additional insured's such replacement policy or a certificate thereof prior to the effective cancellation date. Landlord may, at any time, and from time to time, inspect and/or copy any and all insurance policies required to be procured by Tenant hereunder.

4.5.3 Notwithstanding anything in this Lease to the contrary, Landlord and Tenant each waives any rights of action for negligence against the other party, which may arise during the Term (but commencing on Tenant's possession of the Premises) for damage to the Premises or to the property therein resulting from any fire or other casualty of the kind covered by All Risk property insurance policies, regardless of whether or not, or in what amounts, such insurance is now, or may hereafter be, carried by the parties. Landlord and Tenant shall each secure an appropriate clause in, or an endorsement upon, each property damage insurance policy obtained by it and covering the Building, the Premises or the personal property, fixtures and equipment located therein or thereon, pursuant to which the respective insurance companies waive subrogation and permit the insured, prior to any loss, to agree with a third party to waive any claim it might have against said third party. The waiver of subrogation or permission for waiver of any claim hereinbefore referred to shall extend to the agents of each party and its employees and, in the case of Tenant, shall also extend to all other persons and entities occupying or using the Premises by, through or under Tenant. Subject to the foregoing provisions of this Subsection 4.5.3, and insofar as may be permitted by the terms of the insurance policies carried by it, each party hereby releases the other with respect to any claim which it might otherwise have against the other party for any loss or damage to its property, to the extent such damage is actually covered or would have been covered by policies of insurance required by this Lease to be carried by the respective parties hereunder.

4.6 Utilities; Building Systems Landlord represents that the Premises is serviced by natural gas, electric, city water and sewer and that the facilities providing same to the Premises as well as all mechanical,

plumbing, electrical, HVAC and other similar systems serving the Premises shall be in good and operable condition as of the Commencement Date. Promptly following Tenant taking possession of the Premises, Tenant agrees to contact the utility providers have utilities, meters and accounts placed in Tenant's name, to the extent permitted by the providers. Tenant shall make timely payments to each utility provider directly for all utilities for the Premises during the Term. Landlord shall timely pay any amounts due such providers for the period of time prior to the Commencement Date. In the event the Landlord is charged for any utility charge whatsoever applicable to the Term and Tenant shall not make such payment directly to the provider, said charge shall become payable as additional rent due Landlord with the next payment of rent due provided Tenant has at least twenty (20) days' notice of such charges, along with any fees, late fees or interest charges, and Landlord shall pay such amount to the utility provider.

4.7 Security Deposit. N/A

Article 5.
Landlord's Covenants

5.1 Affirmative Covenants. Landlord shall, during the Term of this Lease provide the following:

5.1.1 Repairs. It is agreed that, except as expressly provided herein, this is a "triple net lease" and Tenant shall arrange for and pay directly without limitation, for all expenses including but not limited to the interior, non-structural portions of the Building which shall include, but shall not necessarily be limited to all grounds maintenance, parking area, sidewalk, interior walls, downspouts, steps, gutters, railings, all heating, cooling, electrical, plumbing and mechanical systems, snow removal, interior and exterior lighting, parking area, garbage removal costs as well as any other costs associated with the repair or replacement and upkeep of the Premises except as expressly to be Landlord's responsibility, and Tenant will maintain the Premises in good condition and state of repair, during the term of the Lease (but commencing on the Tenant's possession of the Premises) as well as during any subsequent option, extension, or renewal periods. Notwithstanding the foregoing, Landlord shall be responsible at Landlord's cost and expenses for the good order, maintenance and repair and, as necessary, replacement of the plumbing systems, utility lines and connections to the Premises (except as installed by Tenant), (ii) sprinkler mains, and (iii) structural systems, including, without limitation, the roof, roof covering (including interior ceiling if damaged by leakage) and load bearing walls, floor slabs, foundations, and masonry walls and other structural exterior portions of the building, exclusive of glass, door equipment, windows, and any interior wall, interior fixtures and equipment.

5.1.2 Maintenance. Lease is NNN Tenant shall be responsible for any and all maintenance except as expressly otherwise provided.

5.1.3 Water and Sewer. Lease is NNN Tenant shall be responsible for all water and sewer charges except as expressly provider otherwise.

5.1.4 Exterior Lighting. Lease is NNN Tenant shall be responsible for any and all exterior lighting.

5.1.5 Compliance with Law. Except to the extent resulting solely from Tenant's particular manner of use of the Premises as a medical marijuana facility or from Tenant's alterations or additions to the Premises, Landlord shall be responsible for compliance, at Landlord's sole cost and expense, with all statutes, rules, ordinances, orders, codes and regulations, and legal requirements, and standards issued there under, as the same may be enacted and amended from time to time (collectively referred to in this Lease as the "Laws"), which are applicable to all or any part of the physical condition and occupancy of the Building, the common areas and the land or additions thereto. To Landlord's knowledge, the Building, common areas and the land are in compliance with all Laws as of the date hereof.

5.2 Interruption. N/A

5.3 Access to Building. Tenant acknowledges that Tenant is responsible for regulating access to the Premises by its personnel, invitees and others (subject to Landlord's rights of entry as provided in this Lease and by law) and for providing security to the Premises and for its own personnel and invitees whenever located therein. Tenant acknowledges that Landlord is not providing security services of any kind to the Premises. Subject to the provisions of Section 5.4, Tenant shall have access to the Premises and Parking Facility at all times.

5.4 Parking. During the Term, Tenant and its employees and invitees may use, at no additional charge, parking spaces in the surface parking lot appurtenant to the Building (the **"Parking Facility"**) on an exclusive basis.

Article 6.
Tenant's Additional Covenants

6.1 Affirmative Covenants. Tenant shall do the following:

6.1.1 Perform Obligations. Tenant shall perform promptly all of the obligations of Tenant set forth in this Lease; and pay when due the Annual Fixed Rent and Additional Rent and all other amounts which by the terms of this Lease are to be paid by Tenant.

6.1.2 Use. Tenant shall, during the Term of this Lease, use the Premises only for the Permitted Uses and from time to time to procure and maintain all licenses and permits necessary therefore and for any other use or activity conducted at the Premises, at Tenant's sole expense.

Notwithstanding anything contained herein to the contrary, Landlord acknowledges (a) that (i) Tenant will be engaged in activities that are considered to be unlawful under federal laws relating to controlled substances; and (ii) although the State of New York has adopted an overall regulatory framework that permits Tenant's proposed activities on the Premises, the regulatory framework is still evolving and that Tenant's failure to comply with New York laws and regulations relating to controlled substances shall not constitute a violation of this Agreement to the extent that such laws and regulations (A) conflict with other applicable New York laws and regulations, and (B) are ambiguous, unclear or incomplete. In addition, Landlord acknowledges that Landlord's rights and remedies under this Agreement are subject to the provisions of Chapter XIII, Part 1004 of the New York Public Health Law (as the same may be amended from time to time and any successor statute) and the rules and regulations promulgated there under (collectively, "NY Medicinal Marijuana Law"). To the extent that there is conflict between the terms of this Agreement and the applicable provisions of NY Medicinal Marijuana Law, the NY Medicinal Marijuana Law shall govern.

6.1.3 Repair. Maintenance and Cleaning. Tenant shall, during the Term of this Lease, maintain the Premises in neat and clean order and condition and perform all repairs to the Premises and all fixtures, systems, and equipment therein or serving the Premises exclusively; electrical systems and equipment; plumbing and sewer lines to the point where they intersect with common lines; interior walls and interior surfaces of exterior walls; ceilings, interior windows and Tenant's personal property) as are necessary to keep them in good and clean working order, appearance and condition, expect for those which are Landlord's responsibility as expressly provided hereunder, reasonable wear and tear and damage by fire or casualty excepted.

6.1.4 Indemnification. Tenant shall neither hold, nor attempt to hold, Landlord or its employees or Landlord's agents or their employees liable for, and Tenant shall indemnify and hold harmless Landlord, its employees and Landlord's agents and their employees from and against, any and all demands, claims, causes of action, fines, penalties, damage, liabilities, judgments and expenses (including, without

limitation, attorneys' fees) incurred in connection with or arising from: (i) the use or occupancy or manner of use or occupancy of the Premises by Tenant or any person claiming under Tenant; (ii) any matter occurring on the Premises during the Term; (iii) any acts, omissions or negligence of Tenant or any person claiming under Tenant, or the contractors, agents, employees, invitees or visitors of Tenant or any such person; (iv) any breach, violation or nonperformance by Tenant or any person claiming under Tenant or the employees, agents, contractors, invitees or visitors of Tenant or any such person of any term, covenant or provision of this Lease or any law, ordinance or governmental requirement of any kind; (v) claims of brokers or other persons for commissions or other compensation arising out of any actual or proposed sublease of any portion of the Premises or assignment of Tenant's interest under this Lease, or Landlord's denial of consent thereto or exercise of any of Landlord's other rights under Subsection 6.2.1; and (vi) any injury or damage to the person, property or business of Tenant, its employees, agents, contractors, invitees, visitors or any other person entering upon the Property under the express or implied invitation of Tenant. If any action or proceeding is brought against Landlord or its employees or Landlord's agents or their employees by reason of any such claim, Tenant, upon notice from Landlord, shall defend the same, at Tenant's expense, with counsel reasonably satisfactory to Landlord. Notwithstanding the foregoing in no event shall this Subsection 6.1.5 require Tenant to indemnify or defend Landlord or its employees or Landlord's agents or their employees against any loss, cost, damage, liability, claim, or expense to the extent arising out of the negligence or willful misconduct of Landlord or its employees or Landlord's agents or their employees.

Except to the extent that such liability is caused by the negligence or willful misconduct act or omission of Tenant, its agents, contractors or employees, Landlord shall defend, indemnify and hold Tenant harmless from all costs, expenses, claims or demands of whatever nature arising from the following: (i) any willful, negligent or tortious act or omission on the part of Landlord, its agents, contractors, or employees; or (ii) any failure on the part of Landlord to perform or comply with any of the covenants, agreements, terms, provisions, conditions or limitations contained in this Lease on its part to be performed or complied with. In case any action or proceeding is brought against Tenant by reason of any such claim, Landlord, upon written notice from Tenant, shall, at Landlord's expense, resist or defend such action or proceeding.

6.1.5 Landlord's Right to Enter. Notwithstanding the foregoing or any other provision contained in this Lease to the contrary, Landlord shall not have access to any portion of the Premises which is not open to the general public or where any medical marijuana may be stored, or any other area of the Premises that may contain health information protected by any laws, rules or regulations enacted to protect individuals' medical records and other personal health information (collectively, "Privacy Laws") except in the presence of an authorized representative of Tenant, in compliance with Privacy Laws, and having previously satisfied the requirements of Tenant's internal policies implemented in accordance with Privacy Laws. Landlord further agrees that access to the Premises shall be subject to, and in compliance with, Laws governing the operation of Tenant's business, including any restrictions or limitations on accessing or handling medical marijuana. Landlord shall further indemnify, defend and hold Tenant harmless from and against any failure on the part of Landlord and those acting by, through or under Landlord to comply with this Article.

6.1.6 Payment of Landlord's Cost of Enforcement. Tenant shall pay on demand Landlord's expenses, including reasonable attorneys' fees, incurred in enforcing any obligation of Tenant under this Lease.

6.1.7 Yield Up. Tenant shall, at the expiration or earlier termination of the Term of this Lease, and any subsequent renewal option periods surrender all keys to the Premises; remove all of its trade fixtures and personal property in the Premises; and vacate and yield up the Premises broom clean. Any trade fixtures or personal property not so removed shall be deemed abandoned and may be removed and disposed of by Landlord in such manner as Landlord shall determine and Tenant shall pay Landlord the entire cost and expense incurred by it in effecting such removal and disposition.

6.1.8 Estoppel Certificate. Tenant shall, within ten (10) days following written request by

Landlord, execute, acknowledge and deliver to Landlord a statement in form satisfactory to Landlord in writing certifying that this Lease is unmodified and in full force and effect and that Tenant has no defenses, offsets or counterclaims against its obligations to pay the Annual Fixed Rent and Additional Rent and any other charges and to perform its other covenants under this Lease (or, if there have been any modifications, that the Lease is in full force and effect as modified and stating the modifications and, if there are any defenses, offsets or counterclaims, setting them forth in reasonable detail), the dates to which the Annual Fixed Rent and Additional Rent and other charges have been paid, and any other factual matter pertaining to this Lease. Any such statement delivered pursuant to this Subsection 6.1.8 may be relied upon by any prospective purchaser or mortgagee of the Property, or any prospective assignee of such mortgage.

6.2 Negative Covenants. Tenant shall not do the following.

6.2.1 Assignment and Subletting. Tenant shall not assign, mortgage, pledge, hypothecate, encumber or otherwise transfer this Lease or sublease (which term shall be deemed to include the granting of concessions and licenses and the like) all or any part of the Premises or suffer or permit this Lease or the leasehold estate hereby created or any other rights arising under this Lease to be assigned, transferred, mortgaged, pledged, hypothecated or encumbered, in whole or in part, whether voluntarily, involuntarily or by operation of law, or permit the use or occupancy of the Premises by anyone other than Tenant or subsidiary of affiliates provided Tenant remains liable for the performance of all obligations under the terms of this Lease. Notwithstanding the foregoing, Landlord shall not unreasonably condition, delay, or withhold its consent to any proposed sublease or assignment.

6.2.2 Profit. If the rent and other sums (including, without limitation, all monetary payments plus the reasonable value of any services performed or any other thing of value given by any assignee or subtenant in consideration of such assignment or sublease), either initially or over the term of any assignment or sublease, payable by such assignee or subtenant exceed the Annual Fixed Rent plus Additional Rent called for hereunder with respect to the space assigned or sublet, Tenant shall pay fifty percent (50%) of such excess, after deduction of third party costs incurred by Tenant in connection with any such assignment or sublease, to Landlord, as Additional Rent, payable monthly if and when such profit is received, with the payment of Annual Fixed Rent. Nothing in this paragraph shall be deemed to abrogate the provisions of this Subsection 6.2.1 and Landlord's acceptance of any sums pursuant to this paragraph shall not be deemed a granting of consent to any assignment of the Lease or sublease of all or any portion of the Premises.

6.2.3 No Release. subletting or assignment shall in any way impair the continuing primary liability of Tenant hereunder, and no consent to any subletting or assignment in a particular instance shall be deemed to be a waiver of the obligation to obtain the Landlord's written approval in the case of any other subletting or assignment. Tenant shall reimburse Landlord immediately upon demand for its reasonable attorneys' fees incurred in connection with documenting Landlord's consent to any assignment or sublease not to excess $750 for any such request. In such an event, tenant agrees to pay for any and all brokerage fees which may be due in connection with subletting or assignment of the premises.

6.2.4 Floor Load: Heavy Equipment. Tenant shall not place a load upon any floor of the Premises exceeding the lesser of the floor load capacity which such floor was designed to carry or which is allowed by law unless Tenant takes reasonable efforts to reinforce such floor.

6.2.5 Electricity. Tenant shall not connect to the electrical distribution system serving the Premises a total load exceeding the lesser of the capacity of such system or the maximum load permitted from time to time under applicable governmental regulations.

6.2.6 Installation, Alterations or Additions. Tenant shall not make any installations, alterations or additions in, to or on the Premises nor to permit the making of any holes in the walls, partitions, ceilings or floors without on each occasion obtaining the prior consent of Landlord, not to be unreasonably

withheld, conditioned or delayed and then only pursuant to plans and specifications approved by Landlord in advance in each instance. All work to be performed to the Premises by Tenant shall (i) be performed in a good and workmanlike manner and in compliance with all applicable zoning, building, fire, health and other codes, regulations, ordinances and laws, and (ii) be made at Tenant's sole cost and expense. Tenant shall pay promptly when due the entire cost of any work to the Premises so that the Premises, Building and Property shall at all times be free of liens for labor and materials. Whenever and as often as any mechanic's or materialmen's lien shall have been filed against the Property based upon any act of Tenant or of anyone claiming through Tenant, Tenant shall within thirty (30) days of notice from Landlord to Tenant take such action by bonding, deposit or payment as will remove or satisfy the lien. Notwithstanding the foregoing, Tenant may make any non-structural alterations, additions or improvements to the interior of the Premises ("Acceptable Changes") without Landlord's consent, provided that: (A) either (i) the aggregate cost of all such Acceptable Changes during any twelve (12) consecutive month period does not exceed Two Hundred Thousand Dollars ($200,000.00), or (ii) such alterations, additions or improvements are required for the Premises to comply with the NY Medicinal Marijuana Law (whether or not such changes are structural); (B) such Acceptable Changes shall be performed by or on behalf of Tenant in compliance with the other provisions of this Article; and (C) such Acceptable Changes would not result in a Design Problem. A "Design Problem" shall mean that such alteration (i) would or is reasonably likely to adversely affect the structural components of the Building or the Building-wide systems; (ii) would not comply with applicable laws, rules or regulations; (iii) would unreasonably interfere with the normal and customary operations of other tenants of the Building; (iv) would or may cause permanent damage or injury to any portion of the Building; (vi) such Alteration would or may cause or create a dangerous or hazardous condition. Landlord agrees to cooperate with Tenant (including signing applications) in obtaining any necessary permits for any alterations which Tenant is permitted to make hereunder.

6.2.7 Signs. Tenant shall not paint or place any signs or place any curtains, blinds, shades, awnings, aerials, or the like, visible from outside the Premises without Landlord's consent which shall not be unreasonably withheld, conditioned or delayed. Tenant shall have the right to install Tenant's signage on any pylon or exterior signboard of Landlord, at Tenant's cost and expense subject to the reasonable approval of Landlord.

6.2.8 Oil and Hazardous Materials. Tenant shall not introduce on or transfer to the Premises or Property, any Hazardous Materials (as hereinafter defined); nor dump, flush or otherwise dispose of any Hazardous Materials into the drainage, sewage or waste disposal systems serving the Premises or Property; nor generate, store, use, release, spill or dispose of any Hazardous Materials in or on the Premises or the Property, or to transfer any Hazardous Materials from the Premises to any other location; and Tenant shall not commit or suffer to be committed in or on the Premises or Property any act which would require any reporting or filing of any notice with any governmental agency pursuant to any statutes, laws, codes, ordinances, rules or regulations, present or future, applicable to the Property or to Hazardous Materials.

Tenant agrees that if it shall generate, store, release, spill, dispose of or transfer to the Premises or Property any Hazardous Materials, it shall forthwith remove the same, at its sole cost and expense, in the manner provided by all applicable Environmental Laws (as hereinafter defined), regardless of when such Hazardous Materials shall be discovered. Furthermore, Tenant shall pay any fines, penalties or other assessments imposed by any governmental agency with respect to any such Hazardous Materials and shall forthwith repair and restore any portion of the Premises or Property which it shall disturb in so removing any such Hazardous Materials to the condition which existed prior to Tenant's disturbance thereof.

Tenant agrees to deliver promptly to Landlord any notices, orders or similar documents received from any governmental agency or official concerning any violation of any Environmental Laws or with respect to any Hazardous Materials affecting the Premises or Property. In addition, Tenant shall, within ten (10) days of receipt, accurately complete any questionnaires from Landlord or other informational requests relating to Tenant's use of the Premises and, in particular, to Tenant's use, generation, storage and/or

disposal of Hazardous Materials at, to, or from the Premises.

Tenant shall indemnify, defend (by counsel satisfactory to Landlord), protect, and hold Landlord free and harmless from and against any and all claims, or threatened claims, including without limitation, claims for death of or injury to any person or damage to any property, actions, administrative proceedings, whether formal or informal, judgments, damages, punitive damages, liabilities, penalties, fines, costs, taxes, assessments, forfeitures, losses, expenses, reasonable attorneys' fees and expenses, consultant fees, and expert fees that arise from or are caused in whole or in part, directly or indirectly, by (i) Tenant's use, analysis, storage, transportation, disposal, release, threatened release, discharge or generation of Hazardous Materials to, in, on, under, about or from the Premises, or (ii) Tenant's failure to comply with any Environmental Laws. Tenant's obligations hereunder shall include, without limitation, and whether foreseeable or unforeseeable, all costs (including, without limitation, capital, operating and maintenance costs) incurred in connection with any investigation or monitoring of site conditions, repair, cleanup, containment, remedial, removal or restoration work, or detoxification or decontamination of the Premises, and the preparation and implementation of any closure, remedial action or other required plans in connection therewith. For purposes of this Section 6.2.8, any acts or omissions of Tenant, or its subtenants or assignees or its or their employees, agents, or contractors (whether or not they are negligent, intentional, willful or unlawful) shall be attributable to Tenant.

The term "Hazardous Materials" shall mean and include any oils, petroleum products, asbestos, radioactive, biological, medical or infectious wastes or materials, and any other toxic or hazardous wastes, materials and substances which are defined, determined or identified as such in any Environmental Laws, or in any judicial or administrative interpretation of Environmental Laws.

The term "Environmental Laws" shall mean any and all federal, state and municipal statutes, laws, regulations, ordinances, rules, judgments, orders, decrees, codes, plans, injunctions, permits, concessions, grants, franchises, licenses, agreements or other governmental restrictions relating to the environment or to emissions, discharges or releases of pollutants, contaminants, petroleum or petroleum products, medical, biological, infectious, toxic or hazardous substances or wastes into the environment including, without limitation, ambient air, surface water, ground water or land, or otherwise relating to the manufacture, processing, distribution, use, treatment, storage, disposal, transport or handling of pollutants, contaminants, petroleum or petroleum products, medical, biological, infectious, toxic or hazardous substances or wastes or the cleanup or other remediation thereof.

Landlord represents and warrants to Tenant that, as of the date on which Landlord shall deliver possession of the Premises to Tenant, the Premises shall be free from contamination by Hazardous Materials. Landlord further represents and warrants to Tenant that, to the best of Landlord's knowledge, no underground storage tanks exist in the Premises. In the event an underground storage tank is determined to exist in the Premises, Tenant shall under no circumstances be deemed to be an owner or operator of such tank, and removal and remediation required by law in connection with such tank shall be performed by Landlord at Landlord's sole cost.

If, at any time during the Term, Hazardous Materials shall be found in or on the Premises, then:

(i) with regard to the presence or release of any Hazardous Materials that Tenant shall not have caused, Landlord shall remove or remediate same to the extent required by Environmental Laws, and in compliance therewith, and at Landlord's sole cost; and Landlord agrees to defend, indemnify, and hold Tenant harmless from and against any and all costs, damages, expenses, and/or liabilities (including reasonable attorneys' fees) which Tenant may suffer as a result of any claim, suit, or action regarding any such Hazardous Materials (whether alleged or real), and/or regarding the removal and remediation of same.

(ii) If, on or after the Commencement Date, Tenant is interfered with in operating its business as a result of the existence of such Hazardous Materials not caused by Tenant, then, Tenant's rent and all other

charges due hereunder shall abate, until Tenant is able to resume the normal operation of its business, subject to the other provisions of this Lease. If Tenant's rent and other charges shall be so abated for 6 months, then, at any time thereafter until such abatement shall cease, Tenant may terminate this Lease upon 15 days' prior notice to Landlord.

(iii) Each of Landlord's and Tenant's obligations pursuant to this Article shall survive any expiration and/or termination of this Lease, and any option renewal period(s).

Article 7.
Casualty or Taking

7.1 Landlord's Termination. In the event that the Premises or the Property, or shall be taken by any public authority or for any public use or shall be condemned by the action of any public authority, or if the Building shall be destroyed or damaged by fire or casualty in its entirety and Landlord shall choose not to restore the Building, then this Lease may be terminated at the election of Landlord. Such election, which may be made notwithstanding the fact that Landlord's entire interest may have been divested, shall be made by the giving of notice by Landlord to Tenant within sixty (60) days after the date of the taking or casualty.

7.2 Tenant's Termination. If any portion of the Premises or any portion of the Building shall be damaged or destroyed by fire or other casualty to the extent that the operation of Tenant's business in the Premises in the normal course is materially adversely affected, then, within sixty (60) days of such fire or other casualty, Landlord shall submit to Tenant a reasonable engineering estimate as to the estimated length of time to complete such repairs. If the time period **("Estimated Restoration Period")** set forth in such estimate shall exceed one hundred eighty (180) days of the date of such casualty, Tenant may elect, by a notice sent within thirty (30) days after notice of such estimate is sent to Tenant, to terminate this Lease. If such estimate shall fall within the 180-day limit, Tenant shall have no such right to terminate and Landlord shall, subject to the provisions of this Article 7, proceed with due diligence and promptness to reasonably complete the repairs or restoration within such one hundred eighty (180) days, subject always to delays for causes beyond Landlord's reasonable control and the other limitations set forth in this Article 7.

In the event that the Premises or the Building are damaged by fire or other casualty to such an extent so as to render the Premises untenantable, and if Landlord shall fail to substantially complete said repairs or restoration within a period (the "Restoration Period") which is the greater of the Estimated Restoration Period or one hundred fifty (150) days after the date of the casualty for any reason other than Tenant's fault, Tenant may terminate this Lease by giving Landlord written notice as follows:

a) Said notice shall be given after said Restoration Period.

b) Said notice shall set forth an effective date which is not earlier than thirty (30) days after Landlord receives said notice.

c) If said repairs or restoration are substantially complete on or before the date thirty (30) days (which thirty-(30)-day period shall be extended by the length of any delays caused by Tenant or Tenant's contractors) after Landlord receives such notice, said notice shall have no further force and effect.

d) If said repairs or restoration are not substantially complete on or before the date thirty (30) days (which thirty-(30)-day period shall be extended by the length of any delays caused by Tenant or Tenant's contractors) after Landlord receives such notice, the Lease

shall terminate as of said effective date.

7.3 Restoration. If neither party elects to so terminate, this Lease shall continue in force and (so long as the damage is not caused by the negligence or other wrongful act of Tenant or its employees, agents, contractors or invitees) a just proportion of the Annual Fixed Rent reserved, according to the nature and extent of the damages sustained by the Premises, shall be suspended or abated excluding real estate taxes until the Premises (excluding any improvements to the Premises made at Tenant's expense), or what may remain thereof, shall be put by Landlord in proper condition for use, which Landlord covenants to do with reasonable diligence to the extent permitted by the net proceeds of insurance recovered or damages awarded for such destruction, taking, or condemnation and subject to zoning and building laws or ordinances then in existence. **"Net proceeds of insurance recovered or damages awarded"** refers to the gross amount of such insurance or damages actually made available to Landlord (and not retained by any Superior Lessor or Superior Mortgagee) less the reasonable expenses of Landlord incurred in connection with the collection of the same, including without limitation, fees and expenses for legal and appraisal services. Tenant hereby waives the provisions of Section 227 of the Real Property Law and agrees that the provisions of this Article 7 shall govern and control in lieu thereof.

7.4 Award. Irrespective of the form in which recovery may be had by law, all rights to damages or compensation shall belong to Landlord in all cases. Tenant hereby grants to Landlord all of Tenant's rights to such damages and covenants to deliver such further assignments thereof as Landlord may from time to time request. Nothing contained herein shall be construed to prevent Tenant from prosecuting in any condemnation proceedings a claim for relocation expenses, provided that such action shall not affect the amount of compensation otherwise recoverable by Landlord from the taking authority.

7.5 Abatement. If this Lease is not terminated by Landlord or Tenant as a result of fire or other casualty, the Fixed Rent and any recurring Additional Rent shall be abated with respect to the Premises or the portion thereof rendered untenantable until such time as the Premises are rendered wholly tenantable. In the event of termination for fire or other casualty or in the event of a taking or condemnation, Fixed Rent and the any recurring payment of Additional Rent shall abate as of the date of such termination, or the date of such Taking, whichever shall first occur. If any part of the Premises shall be subject to such a taking or condemnation and this Lease shall not be so terminated, the Fixed Rent and any recurring payment of Additional Rent shall be abated pro-rata based upon the rentable area of the Premises that is the subject of such taking or condemnation.

Article 8.
Defaults

8.1 Default of Tenant. (i) If Tenant shall default in its obligations to pay the Annual Fixed Rent or Additional Rent or any other charges under this Lease when due or shall default in complying with its obligations under Subsection 6.1.11 of this Lease and if any such default shall continue for fifteen (15) days after written notice from Landlord designating such default, or (ii) if as promptly as possible but in any event within thirty (30) days after written notice from Landlord to Tenant specifying any default or defaults other than those set forth in clause (i) Tenant has not cured the default or defaults so specified (unless such default or defaults are incapable of being cured within thirty (30) days, in which case no such default or defaults shall be deemed a Default of Tenant provided that Tenant has commenced to cure such default or defaults within thirty (30) days after notice and diligently pursues the same to completion), then, and in any of such cases indicated in clauses (i) and (ii) hereof (collectively and individually, a **"Default of Tenant"**), Landlord may prior to the cure of any such default give notice to Tenant terminating this Lease and the Term hereof, which notice shall specify the date of termination, whereupon on the date so specified, the Term of this Lease and all of Tenant's rights and privileges under this Lease shall expire and terminate but Tenant shall remain liable as hereinafter provided.

8.2 Remedies. In the event of any termination pursuant to Section 8.1, Tenant shall pay the Annual Fixed Rent, Additional Rent and other charges payable hereunder up to the time of such termination. Thereafter, whether or not the Premises shall have been re let, Tenant shall be liable to Landlord for, and shall pay to Landlord the Annual Fixed Rent, Additional Rent and other charges which would be payable hereunder for the remainder of the Term of this Lease had such termination not occurred, less the net proceeds, if any, of any reletting of the Premises. Tenant shall pay such damages to Landlord monthly on the days on which the Annual Fixed Rent, Additional Rent or other charges would have been payable hereunder if the Term of this Lease had not been so terminated. Notwithstanding anything otherwise set forth herein, Landlord agrees to use commercially reasonable efforts to mitigate its damages resulting from any default of Tenant.

Nothing contained in this Lease shall, however, limit or prejudice the right of Landlord to prove for and obtain in proceedings for bankruptcy or insolvency by reason of the termination of this Lease, an amount equal to the maximum allowed by any statute or rule of law in effect at the time when, and governing the proceedings in which, the damages are to be proved, whether or not the amount be greater than, equal to, or less than the amount of the loss or damages referred to above.

In case of any Default of Tenant, re-entry, expiration and repossession by summary proceedings or otherwise, Landlord may (i) relet the Premises or any part or parts thereof, either in the name of Landlord or otherwise, for a term or terms which may at Landlord's option be equal to or less than or exceed the period which would otherwise have constituted the balance of the Term of this Lease and may grant concessions or free rent to the extent that Landlord considers advisable and necessary to relet the same and (ii) may make such alterations, repairs and decorations in the Premises as Landlord in its sole judgment considers advisable and necessary for the purpose of reletting the Premises; and the making of such alterations, repairs and decorations shall not operate or be construed to release Tenant from liability hereunder as aforesaid. Landlord shall in no event be liable in any way whatsoever for failure to relet the Premises, or, in the event that the Premises are relet, for failure to collect the rent under such reletting.

Notwithstanding anything set forth in this Lease to the contrary, Landlord acknowledges that its rights of reentry into the Premises set forth in this Lease do not confer on it the authority to manufacture and/or dispense on the Premises medical marijuana in accordance with Article 33 of the Public Health Law and Landlord agrees to provide the New York State Department of Health, Mayor Erastus Corning 2nd Tower, The Governor Nelson A. Rockefeller Empire State Plaza, Albany, N.Y. 12237, with notification by certified mail of its intent to reenter the Premises or to initiate dispossess proceedings or that the Lease is due to expire, at least sixty (60) days prior to the date on which the Landlord intends to exercise a right of reentry or to initiate such proceedings or at least sixty (60) days before expiration of the Lease.

8.3 Landlord's Right to Cure Defaults. At any time, Landlord shall have the right, but shall not be required, to pay such sums or do any act which requires the expenditure of monies which may be necessary or appropriate by reason of the failure or neglect of Tenant to comply with any of its obligations under this Lease beyond all applicable notice and cure periods (provided, however, in the case of an emergency, Landlord shall have no obligation to provide any advance notice or wait for the expiration of any applicable cure period before exercising its rights under this Section 8.35), and in the event of the exercise of such right by Landlord, Tenant agrees to pay to Landlord forthwith upon demand, as Additional Rent, all such sums including reasonable attorney's fees, together with interest thereon at a rate (the "Default Rate") equal to the lesser of 6% over the Prime Rate or the maximum rate allowed by law. "Prime Rate" shall mean a rate of interest, determined daily, which is two (2) percentage points above the 14-day moving average closing trading price of 90-day Treasury Bills.

8.4 Holding Over. Any holding over by Tenant after the expiration or early termination of the Term of this Lease shall be treated as a daily tenancy at sufferance at a rate equal to 1.5 times the Annual Fixed

Rent in effect immediately prior to the expiration or earlier termination of the Term plus Additional Rent and other charges herein provided (prorated on a daily basis). Otherwise, all of the covenants, agreements and obligations of Tenant applicable during the Term of this Lease shall apply and be performed by Tenant during such period of holding over as if such period were part of the Term of this Lease.

8.5 Effect of Waivers of Default. Any consent or permission by Landlord to any act or omission by Tenant shall not be deemed to be consent or permission by Landlord to any other similar or dissimilar act or omission and any such consent or permission in one instance shall not be deemed to be consent or permission in any other instance.

8.6 No Waiver, Etc. The failure of Landlord or Tenant to seek redress for violation of, or to insist upon the strict performance of, any covenant or condition of this Lease shall not be deemed a waiver of such violation nor prevent a subsequent act, which would have originally constituted a violation, from having all the force and effect of an original violation. The receipt by Landlord of rent with knowledge of the breach of any covenant of this Lease shall not be deemed to have been a waiver of such breach by Landlord, or by Tenant, unless such waiver be in writing signed by the party to be charged. No consent or waiver, express or implied, by Landlord or Tenant to or of any breach of any agreement or duty shall be construed as a waiver or consent to or of any other breach of the same or any other agreement or duty.

8.7 No Accord and Satisfaction. No acceptance by Landlord of a lesser sum than the Annual Fixed Rent, Additional Rent or any other charge then due shall be deemed to be other than on account of the earliest installment of such rent or charge due, nor shall any endorsement or statement on any check or any letter accompanying any check or payment as rent or other charge be deemed an accord and satisfaction, and Landlord may accept such check or payment without prejudice to Landlord's right to recover the balance of such installment or pursue any other remedy in this Lease provided.

8.8 Limitation. In no event shall Tenant be liable for punitive or consequential damages under this Lease.

Article 9.
Rights of Holders, Landlord's Representations

9.1 Subordination. Landlord represents that there is currently no mortgage or ground lease affecting the Building or the Property. This Lease, and all rights of Tenant hereunder, shall be subject and subordinate to any ground or master lease, and to any and all mortgages, which may hereafter affect the Building or the Property and/or any such lease provided that the holder of any such mortgage shall execute and deliver to Tenant an agreement ("SNDA Agreement"), in form reasonably satisfactory to Tenant, providing that such holder will recognize this Lease and not disturb Tenant's possession of the Premises in the event of foreclosure if Tenant is not then in default hereunder beyond any applicable cure period. Tenant agrees, upon receipt of such SNDA Agreement, to execute such further reasonable instrument(s) as may be necessary to subordinate this Lease to the lien of any such mortgage.

9.2 Landlord's Representations. Landlord warrants and covenants that Landlord has good and clear record and marketable title to the Premises, in fee simple absolute, free of liens and encumbrances (including mortgages). Landlord also warrants and covenants that: To the best of Landlord's knowledge, there are no restrictive covenants or other agreements, and no zoning or other Laws, and no other legal impediment, any of which would prevent Tenant from occupying the Premises for the purposes herein provided. Landlord shall not enter into any restrictive covenants leases, or other agreements, which would prevent Tenant from occupying the Premises for the purposes herein provided. Landlord warrants and represents to Tenant that, to the best of Landlord's knowledge as of the date hereof, Landlord has not received any notices of violations, orders, or notices of violations of laws, rules or regulations with respect to the Premises.

Article 10.
Miscellaneous Provisions

10.1 Notices. All notices, requests, demands, consents, approvals or other communications to or upon the respective parties hereto shall be in writing and delivered by hand or mailed by certified or registered mail, return receipt requested, or a nationally recognized courier service that provides a receipt for delivery such as Federal Express, United Parcel Service or U.S. Postal Service Express Mail and shall be effective on the date delivered (or the first date such delivery is attempted and refused) in writing to the party to which such notice, request, demand, consent, approval or other communication is required or permitted to be given or made under this Lease, addressed if intended for Landlord, to the Original Address of Landlord set forth in Section 1.1 of this Lease (or to such other address or addresses as may from time to time hereafter be designed by Landlord by like notice); and if intended for Tenant, addressed to Tenant at the Original Address of Tenant set forth in Section 1.1 of this Lease (or to such other address or addresses as may from time to time hereafter be designated by Tenant by like notice).

10.2 Quiet Enjoyment; Landlord's Right to Make Alterations, Etc. Landlord agrees that upon Tenant's paying the rent and performing and observing the agreements, conditions and other provisions on its part to be performed and observed, Tenant shall and may peaceably and quietly have, hold and enjoy the Premises during the Term hereof without any manner of hindrance or molestation from Landlord or anyone claiming under Landlord, subject, however, to the terms of this Lease.

10.3 Waiver of Jury Trial

LANDLORD AND TENANT HEREBY WAIVE TRIAL BY JURY IN ANY ACTION, PROCEEDING OR COUNTERCLAIM BROUGHT BY EITHER OF THEM AGAINST THE OTHER IN CONNECTION WITH THIS LEASE.

10.4 Lease not to be Recorded.

Tenant agrees that it will not record this Lease. Both parties shall, upon the request of either (and at the expense of the requesting party), execute and deliver a notice or short form of this Lease in such form, if any, as may be acceptable for recording with the land records of the governmental entity responsible for keeping such records for the City of Cicero, New York. In no event shall such document set forth the rent or other charges payable by Tenant pursuant to this Lease; and any such document shall expressly state that it is executed pursuant to the provisions contained in this Lease and is not intended to vary the terms and conditions of this Lease

10.5 Limitation of Landlord's Liability. The term "Landlord", so far as covenants or obligations to be performed by Landlord are concerned, shall be limited to mean and include only the owner or owners at the time in question of Landlord's interest in the Property, and in the event of any transfer or transfers of such title to said Property, Landlord (and in case of any subsequent transfers or conveyances, the then grantor) shall be concurrently freed and relieved from and after the date of such transfer or conveyance, without any further instrument or agreement, of all liability with respect to the performance of any covenants or obligations on the part of Landlord contained in this Lease thereafter to be performed, it being intended hereby that the covenants and obligations contained in this Lease on the part of Landlord, shall, subject as aforesaid, be binding on Landlord, its successors and assigns, only during and in respect of their respective period of ownership of such interest in the Property. Notwithstanding the foregoing, in no event shall the acquisition of Landlord's interest in the Property by a purchaser which, simultaneously therewith, leases Landlord's entire interest in the Property back to Landlord, be treated as an assumption by operation of law or otherwise, of Landlord's obligations hereunder. Tenant shall look solely to such seller-lessee, and its successors from time to time in title, for performance of Landlord's obligations hereunder. The seller-lessee, and its successors in title, shall be Landlord hereunder unless and until such purchaser expressly assumes in writing Landlord's obligations hereunder.

10.6 Brokerage. Each of the parties hereby warrants and represents to the other that it has dealt with no brokers in connection with the consummation of this Lease, other than Icon Companies on behalf of Landlord, and Flaum Management on behalf of Tenant (the "Brokers"), and in the event of any brokerage claims or liens, other than by Brokers, against a party (the "Innocent Party") predicated upon or arising out of prior dealings with the other party, such other party agrees to defend the same and indemnify and hold the Innocent Party harmless against any such claim, and to discharge any such lien. Landlord shall pay the Brokers pursuant to a separate agreement between Landlord and Icon Companies.

10.7 Applicable Law and Construction. This Lease shall be governed by and construed in accordance with the laws of New York and if any provisions of this Lease shall to any extent be invalid, the remainder of this Lease shall not be affected thereby. All understandings and agreements heretofore made between the parties are merged in this Lease and any other such written agreement(s) made concurrently herewith, which alone fully and completely express the agreement of the parties and which are entered into after full investigation, neither party relying upon any statement or representation not embodied in this Lease or any other such written agreement(s) made concurrently herewith. This Lease may be amended, and the provisions hereof may be waived or modified, only by instruments in writing executed by Landlord and Tenant. The reference contained to successors and assigns of Tenant is not intended to constitute a consent to assignment of Tenant. Except as otherwise set forth in this Lease, any obligations of Tenant (including, without limitation, rental and other monetary obligations, repair obligations and obligations to indemnify Landlord), shall survive the expiration or earlier termination of this Lease, and Tenant shall immediately reimburse Landlord for any expense incurred by Landlord in curing Tenant's failure to satisfy any such obligation (notwithstanding the fact that such cure might be effected by Landlord following the expiration or earlier termination of this Lease).

10.8 Venue. Each party hereby irrevocably consents to the exclusive jurisdiction of the courts located in and for the County of Onondaga and State of New York and of the federal courts located in the State of New York for all purposes in connection with any action, suit or proceeding which arises out of or relates to this Lease. To the fullest extent it may effectively do so under applicable law, each party hereby irrevocably waives and agrees not to assert, by way of motion, as a defense or otherwise, any claim that it is not subject to the jurisdiction of any such court, any objection which it may now or hereafter have to the laying of the venue of any such action, suit or proceeding brought in any such court and any claim that any such action, suit or proceeding brought in any such court has been brought in an inconvenient forum.

SEE ATTACHED RIDER TO LEASE

RIDER TO LEASE
ACV ASSOCIATES LLC
To
CITIVA MEDICAL, LLC

The terms of this Rider to Lease shall modify, govern and take precedence over any term(s), covenant(s), provision(s) or condition(s) of the lease to which it is attached.

1. TRIPLE NET LEASE. Landlord and Tenant agree that it is their intention that the fixed monthly rent payable under this Lease, as well as any rent increases, and any subsequent renewal, option period(s) shall be net to Landlord, except as expressly provided otherwise in this Lease, so that this Lease shall yield to Landlord the fixed monthly rent specified herein during the term of this Lease as well as any and all renewal option period(s) whether specified in the lease or not. All costs, expenses and obligations of every kind and nature whatsoever relating to the Premises as set forth in this Lease shall be paid by Tenant, and that all terms, conditions and provisions of the Lease shall be construed to carry out the intention of the parties.

2. POSSESSION. Landlord and Tenant acknowledge and agree that possession of the Premises to Tenant from Landlord shall not occur (and the risk of loss and all insurance obligations shall remain solely upon Landlord and Tenant shall have no rental obligations under this Lease other than Fixed Rent) until Tenant has been selected as a Registered Organization provided that Tenant shall have reasonable access to the Premises prior to possession for purposes of measuring and otherwise preparing the Premises for Tenant's build-out. Tenant shall be entitled to waive the forgoing, at Tenant's option. Tenant being a "Registered Organization" shall mean that Tenant shall have obtained a license from the New York State Department of Health as a registered organization under Title 10 (Health) of the Official Compilation of Codes, Rules and Regulations of the State of New York (as may be amended and together with any enabling rules and regulations, "Title 10") .

3. REGISTERED ORGANIZATION / REAL ESTATE TAXES. Tenant upon receiving notification by the New York State Department of Health Medical Marijuana Program, that it has been selected as a Registered Organization agrees to use commercially reasonable efforts to arrange for the direct payment of all future property taxes due with respect to the Premises during the term of this Lease. In such case, Tenant also agrees to reimburse landlord for such property taxes previously paid by Landlord which are for the period from June 1, 2015 until Tenant pays the applicable taxing authorities directly. [LANDLORD, PLEASE PROVIDE COPY OF THE PROPERTY'S TAX BILL.]

4. REGISTERED ORGANIZATION. The Tenant upon being notified that it has been selected as a Registered Organization agrees to promptly notify Landlord of said selection. If Tenant is not selected as a Registered Organization by October 31, 2015, Tenant shall be entitled to terminate this Lease and any and all Fixed Rent previously paid by Tenant to Landlord with respect to the period of time through and including November 30, 2015 shall be retained by Landlord.

Signatures appear on following page.

BY SIGNING BELOW THE PARTIES AGREE TO THE ABOVE TERMS AND DO BIND THEMSELVES, THEIR LEGAL REPRESENTATIVES AND ASSIGNS.

ACV ASSOCIATES LLC - Landlord

By_____ Dated: _____, 2015

Name: Anthony Vonoflorio

Title: Managing Member ACV ASSOCIATES LLC

CITIVA MEDICAL, LLC - Tenant

By: _____ Dated: _____, 2015

Name:

Title:

EXHIBIT A

PLAN SHOWING THE PREMISES

See attached plan.

Redacted Pursuant to N.Y. Public Officers Law, Art. 6

LEASE

BY AND BETWEEN

KANEWPO, LLC

AND

CITIVA MEDICAL, LLC,

TENANT

2290 South Road, Suite C, Poughkeepsie, New York 12601

June __, 2015

LEASE
Article 1.

Reference Data

1.1 Introduction and Subjects Referred To.

This is a lease (this **"Lease"**) entered into by and between KANEWPO, LLC, a New York limited liability company **("Landlord"),**and CITIVA MEDICAL, LLC, a New York limited liability company **("Tenant").** Each reference in this Lease to any of the following terms or phrases shall be construed to incorporate the corresponding definition stated in this Section 1.1.

Date of this Lease	June 1, 2015
Building and Property	That building located at 2290 South Road, Poughkeepsie, New York (the **"Building").** The Building and the land parcels on which it is located are hereinafter collectively referred to as the **"Property".** The Building consists of approximately 14,300 +/- leasable square feet.
Premises:	The portion of the Building substantially as shown on Exhibit A hereto and known as Suite C together with the right to use the Parking Lot and the other common areas of the Property as depicted on said Exhibit A (the **"Premises"**).
Premises Rentable Area:	Approximately 1932 +/- leasable square feet
Commencement Date:	The date this lease is fully executed by the parties.
Licensing Period:	The period commencing June 1, 2015 and ending on the earlier of (i) the date Tenant obtains the License (as hereinafter defined), or (ii) one hundred and twenty (120) days after the date of this Lease.
Term:	The period commencing on the Occupancy Date, as hereinafter defined, and expiring on the last day of the calendar month that is five (5) full years after the Occupancy Date.

Occupancy Date:	The day that, following the expiration of the Build Out Period, is the date of delivery of the Premises to Tenant in the manner and condition required herein and with all conditions to delivery of possession set forth herein having been fulfilled.
Tenant's Percentage:	14%
Tenant's Work:	Tenant's initial alterations and improvements of the demised premises as Tenant may require to use and occupy the Premises for Tenant's Permitted Use, such work to be performed at Tenant's sole cost and expense. Tenant's Work shall be subject to the provisions of Section 6.2.4. herein.
Build Out Period:	The period beginning immediately following the expiration of the Licensing Period, and ending on the Occupancy Date.
Permitted Use:	Principally and primarily for use as a medical marihuana facility as permitted by the NY Medicinal Marihuana Law (as hereinafter defined) subject to the terms and conditions of this Lease or for any other purpose that complies with applicable law, rule or regulation.
Commercial General Liability Insurance Limits:	$2,000,000.00 for an individual occurrence and $3,000,000.00 in the aggregate, and for property damage to the extent of $100,000.00.
Original Address of Landlord:	80 Washington Street, Suite 100, Poughkeepsie, New York 12601, Attn. Kari Daniels Redl
Original Address of Tenant:	7378 Amboy Road, Staten Island, New York 10307
Security Deposit:	$6,800.00
License Fee / Rent:	Tenant shall pay a License Fee at the rate of $2,800.00 per month for Months 1 through Months 3 of the Licensing Period and a License Fee at the rate of $2,900.00 per month for Month 4 of the Licensing Period. Tenant acknowledges and agrees that it shall be obligated to pay the aforesaid License Fee during the Licensing Period, notwithstanding

that Tenant shall not have the right to occupy the Premises during the Licensing Period (provided that Tenant shall have access to the Premises during the Licensing Period for purposes of Tenant's space-planning, measurement and inspections) unless Tenant shall have delivered Landlord notice waiving in writing Tenant's Termination Option set forth in Section 3.2 below and, in such case, the Occupancy Date and the completion of Landlord's Work shall be accelerated to permit Tenant occupancy of the Premises within thirty (30) days of delivery of such notice. Rent shall be abated during the Build Out Period. Following the expiration of the Build Out Period, Tenant shall pay Annual Fixed Rent for the Term, pursuant to the table below, regardless of whether Tenant's Work is complete as of the Occupancy Date.

Lease Year	Annual Fixed Rent	Monthly Fixed Rent	PSF
Term:			
Year One	$51,198.00	$4,266.50	$26.50
Year Two	$51,198.00	$4,266.50	$26.50
Year Three	$53,130.00	$4,427.50	$27.50
Year Four	$53,130.00	$4,427.50	$27.50
Year Five	$55,062.00	$4,588.50	$28.50

1.2 Exhibits

EXHIBIT A. Plan showing the Premises.

EXHIBIT B. Landlord's Work

EXHIBIT C. Confirmation of Lease Provisions.

Article 2.
Premises and Term

2.1 Premises. Landlord hereby leases to Tenant and Tenant hereby leases from Landlord, subject to and with the benefit of the terms, covenants, conditions and provisions of this Lease, the Premises, excluding exterior faces of exterior walls, the Building roof and any pipes, ducts, conduits, wires and other fixtures, facilities or equipment serving the common areas of the Property or the Premises together with the premises of other tenants in the Building

2.2 Term.

(a) The term of this Lease shall be for a period beginning on the Occupancy Date (as defined in Section 3.1) and continuing for the Term and any extension thereof in accordance with the provisions of this Lease, unless sooner terminated as hereinafter provided. When the dates of the beginning and end of the Term have been determined, such dates shall be evidenced by a document executed by Landlord and Tenant and delivered each to the other, but the failure of Landlord and Tenant to execute or deliver such document shall have no effect upon such dates. The Term and any extension thereof in accordance with the provisions of this Lease are hereinafter referred to as the **"Term"** of this Lease.

Article 3.
Commencement and Condition

3.1 Commencement Date. The Commencement Date shall be the date set forth in Section 1.1.

3.2 Licensing Contingency. Except with respect to Tenant's obligation to pay rent during the Licensing Period as set forth in Section 1.1, this Lease, at Tenant's option, shall be contingent on Tenant obtaining the License. For purposes hereof, the License shall mean a license from the New York State Department of Health that Tenant is a registered organization under Title 10 (Health) of the Official Compilation of Codes, Rules and Regulations of the State of New York (as may be amended and together with any enabling rules and regulations. Tenant shall diligently pursue such License. In the event that Tenant fails to obtain the License, or for any other reason in Tenant's sole discretion, Tenant shall have the right to cancel this Lease (the "Termination Option") by giving written notice to Landlord within ten (10) days of the expiration of the Licensing Period and neither party shall have any further rights, obligations or liabilities against or to the other hereunder or otherwise provided that Tenant shall be responsible for the License Fee as provided in Section 1.1 only for the entire four months of the Licensing Period even if Tenant exercises such Termination Option and Landlord shall be responsible for the return of the Security Deposit as provided in Section 4.6 below.

3.3 Condition of Premises. Within thirty (30) days following the expiration of the Licensing Period and on or before the Occupancy Date being deemed to have occurred, Landlord shall commence and perform various items of leasehold improvements to the Premises, as set forth in Exhibit B hereto, at Landlord's expense ("Landlord's Work"), provided that if Tenant notifies Landlord in writing that Tenant waives its Termination Option pursuant to Section 3.2 above prior to the expiration of the Licensing Period, Landlord shall complete Landlord's Work within thirty (30) days of delivery such notice. If Landlord fails to complete Landlord's Work as required by the foregoing sentence rent will be abated until such time as Landlord's Work is complete. If Landlord fails to complete Landlord's Work within sixty (60) days after the expiration of the Licensing Period or of the delivery of Tenant's notice waiving its Termination Option, as applicable, Tenant shall be entitled to terminate this Lease and receive a refund of all monies paid Landlord hereunder.

Article 4.
Rent, Additional Rent, Insurance and Other Charges

4.1 The Annual Fixed Rent. Tenant agrees to pay to Landlord, or as otherwise directed by Landlord, commencing on the Occupancy Date, the Annual Fixed Rent. Annual Fixed Rent shall be payable in equal monthly installments, in advance, on the first day of each and every calendar month during the Term of this Lease from and after the Occupancy Date, at the Original Address of Landlord, or at such other place as Landlord shall from time to time designate by notice, by check drawn on a domestic bank. Annual Fixed Rent for any partial month shall be prorated on a daily basis. Any payment of rent during the Licensing Period, Annual Fixed Rent, or Additional Rent that is not paid in full within ten (10) days of notice that same was not paid on the date it is due shall be subject to a two (2%) percent late fee.

4.2 Additional Rent. Commencing as of the Occupancy Date, Tenant shall pay to Landlord, as additional rent any and all other charges and amounts payable by or due from Tenant to Landlord pursuant the terms of this Lease (all such amounts referred to in this sentence being **"Additional Rent"**). Unless otherwise specified in this Lease, Additional Rent shall be due on a monthly basis on the same date as Tenant's Annual Fixed Rent payment.

4.3 Personal Property and Sales Taxes. Tenant shall pay all taxes charged, assessed or imposed upon the personal property of Tenant and all taxes on the sales of inventory, merchandise or other goods or services by Tenant in, upon, or from the Premises. Tenant shall provide Landlord with proof of payment of all taxes on the sales of inventory, merchandise or other goods or services by Tenant in, upon, or from the Premises, within thirty (30) days of written notice requesting same.

4.4 Insurance. Tenant shall, at its expense, take out and maintain, prior to taking occupancy of the Premises and throughout the Term of this Lease thereafter, the following insurance:

4.4.1 Commercial general liability insurance (on an occurrence basis and on a 1988 ISO CGL form or its equivalent, including without limitation, broad form contractual liability, bodily injury, property damage, fire legal liability, and products and completed operations coverage) under which Tenant is named as an insured and Landlord as additional insured as its interests may appear, in the minimum amount of $2,000,000.00 for an individual occurrence and $3,000,000.00 in the aggregate, and for property damage to the extent of $100,000.00.

Worker's compensation insurance with statutory limits covering all of Tenant's employees working on the Premises; and

So-called "special form" property insurance on a "replacement cost" basis with an agreed value endorsement covering all furniture, furnishings, fixtures, plate glass, and equipment and other personal property brought to the Premises by Tenant and all improvements and betterments to the Premises performed at Tenant's expense.

4.4.2 All such policies shall contain a clause confirming that such policy and the coverage evidenced thereby shall be primary with respect to any insurance policies carried by Landlord and shall be obtained from responsible companies qualified to do business and in good standing in the State of New York and shall have a general policy holder's rating in Best's of at least A+ X. A certificate (on ACORD Form 27 or its equivalent) of the insurer, certifying that such policy has been issued and paid in full, providing the coverage required by this Section and containing provisions specified herein, shall be delivered to Landlord prior to the commencement of Tenant's Work and, upon renewals, not less than thirty (30) days prior to the expiration of such coverage. If any of the above described policies cancel

before the expiration date thereof, notice will be delivered in accordance with policy provisions. Tenant shall not cancel, terminate or reduce coverage in any of the above policies without providing Landlord at least thirty (30) days' prior written notice thereof. In the event of such Tenant cancellation, Tenant shall procure and pay for replacement of such insurance and deliver to Landlord and any additional insureds such replacement policy or a certificate thereof prior to the effective cancellation date. Landlord may, at any time, and from time to time, inspect and/or copy any and all insurance policies required to be procured by Tenant hereunder.

4.4.3 Notwithstanding anything in this Lease to the contrary, Landlord and Tenant each waives any rights of action for negligence against the other party, which may arise during the Term for damage to the Premises or to the property therein resulting from any fire or other casualty of the kind covered by All Risk property insurance policies, regardless of whether or not, or in what amounts, such insurance is now, or may hereafter be, carried by the parties. Landlord and Tenant shall each secure an appropriate clause in, or an endorsement upon, each property damage insurance policy obtained by it and covering the Building, the Premises or the personal property, fixtures and equipment located therein or thereon, pursuant to which the respective insurance companies waive subrogation and permit the insured, prior to any loss, to agree with a third party to waive any claim it might have against said third party. The waiver of subrogation or permission for waiver of any claim hereinbefore referred to shall extend to the agents of each party and its employees and, in the case of Tenant, shall also extend to all other persons and entities occupying or using the Premises by, through or under Tenant.

Subject to the foregoing provisions of this Subsection 4.4.3, and insofar as may be permitted by the terms of the insurance policies carried by it, each party hereby releases the other with respect to any claim which it might otherwise have against the other party for any loss or damage to its property, to the extent such damage is actually covered or would have been covered by policies of insurance required by this Lease to be carried by the respective parties hereunder. In addition, Tenant agrees to exhaust any and all claims against its insurer(s) prior to commencing an action against Landlord for any loss.

4.5 Utilities, Water, Refuse. Tenant shall contract for and pay directly all charges for electricity, telephone, and any other utilities provided to the Premises for any purpose, whether designated as a charge, tax, assessment, fee or otherwise; all such charges to be paid as the same from time to time become due. The Premises are or shall be separately metered or sub-metered for electric utilities, including the utilities for HVAC at Landlord's cost. The Premises shall be delivered with all utilities stubbed to the Premises and same and the HVAC shall be in good working order.

During the Term of this Lease, Tenant agrees to pay to Landlord, as Additional Rent, all water and sewer charges or rents assessed or imposed for water and sewer consumed in or on the Premises. Water and sewer charges for the Premises are separately metered and are billed to Tenant monthly on an estimate of Tenant's usage based on Tenant's Percentage. At the end of each calendar year of the Term, Landlord shall provide Tenant with a statement showing actual versus estimated water and sewer usage, and Tenant shall receive a credit for any payments made in excess of Tenant's actual usage. In the event Tenant's actual usage exceeded Tenant's estimated usage, Tenant shall pay the difference to Landlord within ten (10) days of Tenant's receipt of the statement. Any statement by Landlord shall be accompanied by a copy of the applicable water bill.

Unless otherwise prohibited by NY Medicinal Marihuana Law, Tenant may dispose of refuse generated on or by the Premises in the dumpsters located at the rear of the Property. In no event shall Tenant dispose of any marihuana products on the Property or other than in the manner prescribed by NY Medicinal Marihuana Law.

4.6 Security Deposit. simultaneously with the execution of this Lease, Tenant shall provide to Landlord, as collateral for the faithful performance and observance by Tenant of the terms, provisions, and conditions of this Lease, a cash deposit in the amount equal to $3,400 with an additional $3,400 to be delivered to Landlord by Tenant within five (5) business days of the Occupancy Date. It is agreed that in the event Tenant defaults under the terms of this lease beyond the expiration of all grace and notice periods, Landlord may (but shall not be required to) use, apply or return the whole or any part of the Security Deposit so deposited for any sum Landlord may expend by reason of Tenant's default beyond the applicable cure period, or for the payment of any past-due Rent. In the event Landlord shall apply all or any portion of Tenant's security deposit in accordance with this lease, Tenant shall within thirty (30) days of written demand deposit with Landlord an amount sufficient to restore such Security Deposit to the amount set forth in the Section 1.1.

In the event of a sale of the Premises, Landlord shall transfer the Security Deposit to the purchaser in connection with an assignment of this Lease to the purchaser, and, shall thereupon be released by Tenant from all liability for the return of such Security Deposit provided that such purchaser assumes in writing the obligations of Landlord under this Lease and the Security Deposit pursuant to such assignment.

Article 5.
Landlord's Covenants

5.1 Affirmative Covenants. Landlord shall, during the Term of this Lease provide the following:

5.1.1 Repairs. Except as otherwise expressly provided herein, Landlord shall make such repairs and replacements to [the HVAC servicing the Premises], the roof, exterior walls (exclusive of inside surfaces, glass, dock bumpers, and louvers or doors therein), floor slabs, foundations, bearing walls, support beams, columns, shafts, exterior windows, the base, shell and core components of the Building and other structural components of the Building, and to the common areas and facilities of the Property (including any common plumbing and electric systems and the common pipes, conduits and utility lines which serve the Premises in common with other portions of the Property) as may be necessary to keep them in good repair and condition (exclusive of equipment installed by Tenant and except for those repairs required to be made by Tenant pursuant to Subsection 6.1.3 hereof and repairs or replacements occasioned by any act or negligence of Tenant, its servants, agents, customers, contractors, employees, invitees, or licensees).

5.1.2 Maintenance. Landlord shall provide cleaning and maintenance to the Parking Lot and to the walkways, driveways and landscaped areas on the Property (including snow removal to the extent necessary to maintain reasonable access to the Building and Parking Lot) in accordance with standards generally prevailing throughout the term hereof in comparable buildings in the area in which the Premises are located.

5.1.3 Water. Landlord shall furnish domestic cold water to the Premises for ordinary drinking, lavatory and toilet facilities consistent with ordinary retail use.

5.1.4 Exterior Lighting. Landlord shall provide reasonable lighting to the Parking Lot and to the walkways and driveways on the Property.

5.1.5 Compliance with Law. Except to the extent resulting solely from Tenant's particular manner of use of the Premises as a medical marihuana facility, Landlord shall be responsible for compliance, at Landlord's sole cost and expense, with all statutes, rules, ordinances, orders, codes and

regulations, and legal requirements, and standards issued thereunder, as the same may be enacted and amended from time to time (collectively referred to in this Lease as the "Laws"), which are applicable to all or any part of the physical condition and occupancy of the Building, the common areas and the land or additions thereto. Landlord represents and warrants that the Building, common areas and the land are in compliance with all Laws as of the date hereof. In this regard, but not by way of limitation, Landlord shall be responsible for the compliance of the Building, common areas and the land with applicable Laws relating to architectural barriers to the disabled, including but not limited to the Law commonly known as the "Americans with Disabilities Act of 1990" (the "ADA"). Landlord hereby agrees to indemnity, defend and hold Tenant harmless from all loss, cost, liability or expense, including reasonable attorney fees, resulting from its failure to comply with all Laws relating to the Building, common area facilities and the land and condition thereof, including but not limited to the ADA, except to the extent that such non-compliance with Laws is the result of Tenant's Work or other alteration or improvement of the Premises performed by Tenant.

5.2 Interruption. No diminution or abatement of rent, or other compensation, shall be claimed or allowed for inconvenience or discomfort arising from the making of repairs or improvements to the Building or to its appliances, nor for any space taken to comply with any law, ordinance or order of a governmental authority. In respect to the various "services", if any, herein expressly or impliedly agreed to be furnished by the Landlord to the Tenant, it is agreed that there shall be no diminution or abatement of the rent, or any other compensation, for interruption or curtailment of such "service" when such interruption or curtailment shall be due to accident, alterations or repairs desirable or necessary to be made or to inability or difficulty in securing supplies or labor for the maintenance of such "service" or to some other case, not negligence or willful misconduct on the part of the Landlord. Absent Landlord's negligence or willful misconduct, no such interruption or curtailment of any such "service" shall be deemed a constructive eviction unless such interruption of curtailment continues for more than thirty (30) days in any six (6) month period.

5.3 Access to Building. Tenant acknowledges that Tenant is responsible for regulating access to the Premises by its personnel, invitees and others (subject to Landlord's rights of entry as provided in this Lease and by law) and for providing security to the Premises and for its own personnel and invitees whenever located therein. Tenant acknowledges that Landlord is not providing security services of any kind to the Premises. Subject to the provisions of Sections 5.2 and 5.4, Tenant shall have access to the Premises and Parking Lot at all times.

5.4 Parking. During the Term, Tenant and its employees and invitees may use on a non-exclusive basis, at no additional charge, parking spaces in the surface parking lot appurtenant to the Building (the **"Parking Lot"**).All such parking spaces shall be unreserved and available on a first-come, first-served basis until further notice from Landlord. The Parking Lot shall be used for the parking of registered passenger vehicles of Tenant and its employees and invitees only, and Tenant shall not park or install or permit its invitees to park or install any trailers, semitrailers or other commercial vehicles in the Parking Lot or elsewhere on the Property, except for routine parking of delivery/shipping vehicles during normal loading and unloading activities in the dock areas (if any) appurtenant to the Premises. Landlord reserves the right to (a) implement and modify systems to reasonably regulate access to and use of the Parking Lot, (b) designate and redesignate reserved and unreserved parking areas within the Parking Lot (for some or all tenants), (c) change entrances or exits and alter traffic flow within the Parking Lot, and (d) modify the Parking Lot to any extent provided that the aggregate number of unreserved parking spaces available to Tenant is not materially reduced so as to deprive Tenant of parking. Landlord shall not change the Parking Lot to provide materially less parking than currently available to the Premises.

Article 6.
Tenant's Additional Covenants

6.1 Affirmative Covenants. Tenant shall do the following:

6.1.1 Perform Obligations. Tenant shall perform promptly all of the obligations of Tenant set forth in this Lease; and pay when due the Annual Fixed Rent and Additional Rent and all other amounts which by the terms of this Lease are to be paid by Tenant.

6.1.2 Use. Tenant shall, during the Term of this Lease, use the Premises only for the Permitted Uses and from time to time to procure and maintain all licenses and permits necessary therefor and for any other use or activity conducted at the Premises, at Tenant's sole expense.

Notwithstanding anything contained herein to the contrary, it shall not be considered an event of default under this Lease if Tenant's Permitted Use is considered to be unlawful under federal laws relating to controlled substances, provided that Tenant fully complies with Chapter XIII, Part 1004 of the New York Public Health Law (as the same may be amended from time to time and any successor statute) and the rules and regulations promulgated thereunder (collectively, "NY Medicinal Marihuana Law") in its use of the Premises. Additionally, Tenant shall not be in default under the terms of this Lease for violating other applicable New York laws and regulations to the extent that such laws and regulations conflict with NY Medicinal Marihuana Law In addition, Landlord acknowledges that Landlord's rights and remedies under this Agreement are subject to the provisions of the NY Medicinal Marihuana Law. To the extent that there is conflict between the terms of this Agreement and the applicable provisions of NY Medicinal Marihuana Law, the NY Medicinal Marihuana Law shall govern.

6.1.3 Repair. Maintenance and Cleaning. Tenant shall, during the Term of this Lease, maintain the Premises in neat and clean order and condition and perform all repairs to the Premises and all fixtures, systems, and equipment therein or serving the Premises exclusively; electrical systems and equipment; plumbing and sewer lines to the point where they intersect with common lines; interior walls and interior surfaces of exterior walls; ceilings, interior windows and Tenant's personal property) as are necessary to keep them in good and clean working order, appearance and condition, except for those which are Landlord' responsibility as expressly provided hereunder, reasonable use and wear thereof and damage by fire or by casualty only excepted. Additionally, Tenant shall be responsible for ordinary maintenance and repairs\, at Tenant's sole cost, of the heating, ventilation, and air-conditioning ("HVAC") for the Premises, and procure and maintain for the Term of this Lease, an HVAC maintenance contract. Landlord shall be responsible, at Landlord's cost, for any replacements or major repairs to the HVAC, unless same is necessitated by Tenant's default of its obligations under this Lease.

6.1.4 Indemnification. Tenant shall neither hold, nor attempt to hold, Landlord or its employees or Landlord's agents or their employees liable for, and Tenant shall indemnify and hold harmless Landlord, its employees and Landlord's agents and their employees from and against, any and all demands, claims, causes of action, fines, penalties, damage, liabilities, judgments and expenses (including, without limitation, attorneys' fees) incurred in connection with or arising from: (i) the use or occupancy or manner of use or occupancy of the Premises by Tenant or any person claiming under Tenant; (ii) any matter occurring on the Premises during the Term; (iii) any acts, omissions or negligence of Tenant or any person claiming under Tenant, or the contractors, agents, employees, invitees or visitors of Tenant or any such person; (iv) any breach, violation or nonperformance by Tenant or any person claiming under Tenant or the employees, agents, contractors, invitees or visitors of Tenant or any such person of any term, covenant or provision of this Lease or any law, ordinance or governmental requirement of any kind; (v) claims of brokers or other persons for commissions or other compensation

arising out of any actual or proposed sublease of any portion of the Premises or assignment of Tenant's interest under this Lease; and (vi) any injury or damage to the person, property or business of Tenant, its employees, agents, contractors, invitees, visitors or any other person entering upon the Property under the express or implied invitation of Tenant. If any action or proceeding is brought against Landlord or its employees or Landlord's agents or their employees by reason of any such claim, Tenant, upon notice from Landlord, shall defend the same, at Tenant's expense, with counsel reasonably satisfactory to Landlord. Notwithstanding the foregoing in no event shall this Subsection 6.1.5 require Tenant to indemnify or defend Landlord or its employees or Landlord's agents or their employees against any loss, cost, damage, liability, claim, or expense to the extent arising solely out of the negligence or willful misconduct of Landlord or its employees or Landlord's agents or their employees.

Except to the extent that such liability is caused by the negligence or willful misconduct act or omission of Tenant, its agents, contractors or employees, Landlord shall defend, indemnify and hold Tenant harmless from all costs, expenses, claims or demands of whatever nature arising from any willful, negligent or tortious act or omission on the part of Landlord, its agents, contractors, or employees. In case any action or proceeding is brought against Tenant by reason of any such claim, Landlord, upon written notice from Tenant, shall, at Landlord's expense, resist or defend such action or proceeding.

6.1.5 Landlord's Right to Enter. Tenant shall, during the Term of this Lease, permit Landlord and its agents and invitees to enter into and examine the Premises at reasonable times and to show the Premises to prospective lessees, lenders, partners and purchasers and others having a bona fide interest in the Premises, and to make such repairs, alterations and improvements and to perform such testing and investigation as Landlord shall reasonably determine to make or perform provided that same shall not decrease the size of the Premises or materially affect the Tenant's use or operation thereof and provided that any such access must be made with an employee of Tenant present at all times that Landlord and its agents and invitees are in the Premises. Landlord shall have the right to enter the Premises without notice to Tenant and unaccompanied by Tenant in the event of an emergency requiring immediate entry. Notwithstanding the foregoing or any other provision contained in this Lease to the contrary, except in cases of emergency requiring immediate entry to such areas of the Premises, Landlord shall not have access to any portion of the Premises which is not open to the general public or where any medical marihuana may be stored, or any other area of the Premises that may contain health information protected by any laws, rules or regulations enacted to protect individuals' medical records and other personal health information (collectively, "Privacy Laws") except in the presence of an authorized representative of Tenant, in compliance with Privacy Laws, and having previously satisfied the requirements of Tenant's internal policies implemented in accordance with Privacy Laws. Landlord further agrees that access to the Premises shall be subject to, and in compliance with, Laws governing the operation of Tenant's business, including any restrictions or limitations on accessing or handling medical marihuana. Notwithstanding anything set forth above to the contrary, Tenant shall not be required to provide, and Landlord shall not be entitled to have, access to the Premises except in full compliance with the NY Medicinal Marihuana Law. Landlord shall further indemnify, defend and hold Tenant harmless from and against any failure on the part of Landlord and those acting by, through or under Landlord to comply with this Article.

6.1.6 Payment of Landlord's Cost of Enforcement. Tenant shall pay on demand Landlord's expenses, including reasonable attorneys' fees, incurred in enforcing any obligation of Tenant under this Lease.

6.1.7 Yield Up. Tenant shall, at the expiration or earlier termination of the Term of this Lease, surrender all keys to the Premises; remove all of its trade fixtures and personal property in the Premises; and vacate and yield up the Premises broom clean. Any trade fixtures or personal property not so removed shall be deemed abandoned and may be removed and disposed of by Landlord in such manner

as Landlord shall determine and Tenant shall pay Landlord the entire cost and expense incurred by it in effecting such removal and disposition.

6.1.8 Rules and Regulations. Tenant shall, during the Term of this Lease, observe and abide by such reasonable Rules and Regulations of the Building as may be proscribed in writing by Landlord (the "Rules and Regulations"). Tenant shall further be responsible for compliance with the Rules and Regulations by the employees, servants, agents and visitors of Tenant. Landlord shall not be responsible to any tenant for the non-observance or violation by any other tenant however resulting of any rules or regulations at any time prescribed for the Building.

6.1.9 Estoppel Certificate. Tenant shall, within ten (10) days following written request by Landlord, execute, acknowledge and deliver to Landlord a statement in form satisfactory to Landlord in writing certifying that this Lease is unmodified and in full force and effect and that Tenant has no defenses, offsets or counterclaims against its obligations to pay the Annual Fixed Rent and Additional Rent and any other charges and to perform its other covenants under this Lease (or, if there have been any modifications, that the Lease is in full force and effect as modified and stating the modifications and, if there are any defenses, offsets or counterclaims, setting them forth in reasonable detail), the dates to which the Annual Fixed Rent and Additional Rent and other charges have been paid, and any other factual matter pertaining to this Lease. Any such statement delivered pursuant to this Subsection 6.1.10 may be relied upon by any prospective purchaser or mortgagee of the Property, or any prospective assignee of such mortgage.

6.1.10 Compliance with Laws; Specific Restrictions. Except as expressly provided in Section 5.1.5 above or elsewhere in this Lease, Tenant shall be responsible for compliance, at Tenant's sole cost and expense, with all Laws which are applicable to the specific manner of use of the Premises and/or Tenant's occupancy thereof as a medicinal marihuana dispensing facility. Tenant shall not permit, and shall use its all reasonable efforts to prevent, medical marihuana products to be vaporized or consumed on the Premises, in the Building, or in the Parking Lot. At no time, shall Tenant sell or dispense of marihuana on or from the Premises to any person or persons other than as permitted by the NY Medicinal Marihuana Law, and all marihuana dispensed on or from the Premises shall be properly packaged in compliance with the NY Medicinal Marihuana Law.

6.2 Negative Covenants. Tenant shall not do the following.

6.2.1 Assignment and Subletting. Tenant, successors, heirs, executors or administrators shall not assign this Lease, or underlet or underlease the Premises, or any part thereof, without the Landlord's consent in writing which Landlord shall not unreasonably withhold, condition or delay, and in the event of a breach thereof, the term herein shall immediately cease and terminate at the option of the Landlord as if it were the expiration of the Term.

6.2.2 Floor Load; Heavy Equipment. Tenant shall not place a load upon any floor of the Premises exceeding the lesser of the floor load capacity which such floor was designed to carry or which is allowed by law unless Tenant takes reasonable efforts to reinforce such floor.

6.2.3 Electricity. Tenant shall not connect to the electrical distribution system serving the Premises a total load exceeding the lesser of the capacity of such system or the maximum load permitted from time to time under applicable governmental regulations.

6.2.4 Installation, Alterations or Additions. Tenant shall not make any installations, alterations or additions in, to or on the Premises nor to permit the making of any holes in the walls, partitions, ceilings or floors without on each occasion obtaining the prior consent of Landlord, not to be

unreasonably withheld, conditioned or delayed and then only pursuant to plans and specifications approved by Landlord in advance in each instance. All work to be performed to the Premises by Tenant shall (i) be performed in a good and workmanlike manner and in compliance with all applicable zoning, building, fire, health and other codes, regulations, ordinances and laws, and (ii) be made at Tenant's sole cost and expense. Tenant shall pay promptly when due the entire cost of any work to the Premises so that the Premises, Building and Property shall at all times be free of liens for labor and materials for work performed by or on behalf of Tenant. Whenever and as often as any mechanic's or materialmen's lien shall have been filed against the Property based upon any act of Tenant or of anyone claiming through Tenant, Tenant shall within thirty (30) days of notice from Landlord to Tenant take such action by bonding, deposit or payment as will remove or satisfy the lien. Notwithstanding the foregoing, Tenant may make any non-structural alterations, additions or improvements to the interior of the Premises ("Acceptable Changes") without Landlord's consent, provided that: (A) either (i) the aggregate cost of all such Acceptable Changes during any twelve (12) consecutive month period does not exceed One Hundred Fifty Thousand Dollars ($150,000.00), or (ii) such alterations, additions or improvements are required for the Premises to comply with the NY Medicinal Marihuana Law; (B) such Acceptable Changes shall be performed by or on behalf of Tenant in compliance with the other provisions of this Article; and (C) such Acceptable Changes would not result in a Design Problem. A "Design Problem" shall mean that such alteration(i) would or is reasonably likely to adversely affect the structural components of the Building or the Building-wide systems; (ii) would not comply with applicable laws, rules or regulations; (iii) would unreasonably interfere with the normal and customary operations of other tenants of the Building; (iv) would or may cause permanent damage or injury to any portion of the Building; (vi) such Alteration would or may cause or create a dangerous or hazardous condition. Landlord agrees to cooperate with Tenant (including signing applications) in obtaining any necessary permits for any alterations which Tenant is permitted to make hereunder.

6.2.7 Signs. Tenant shall not paint or place any signs or place any curtains, blinds, shades, awnings, aerials, or the like, visible from outside the Premises without Landlord's consent which shall not be unreasonably withheld, conditioned or delayed. Subject to the reasonable approval of Landlord and Tenant obtaining any required municipal approvals, Tenant shall have the right, at Tenant's cost and expense, to install one road sign facing North and one illuminated road sign facing South on the Property, as well as one illuminated sign on the façade of the Building. In the event Landlord deems it necessary to remove any such sign or signs in order to paint the Building or make any other repairs, alterations or improvements in or upon the Building or Property, the Landlord shall have the right to do so, providing the same be removed and replaced at the Landlord's expense, whenever the said repairs, alterations or improvements shall be completed. Tenant's signs must be illuminated fifteen (15) minutes prior to sunset and remain illuminated until 10:00p.m. each evening unless Tenant is prohibited from illuminating such signs by applicable law, rule or regulation.

6.2.8 Oil and Hazardous Materials. Tenant shall not introduce on or transfer to the Premises or Property, any Hazardous Materials (as hereinafter defined); nor dump, flush or otherwise dispose of any Hazardous Materials into the drainage, sewage or waste disposal systems serving the Premises or Property; nor generate, store, use, release, spill or dispose of any Hazardous Materials in or on the Premises or the Property, or to transfer any Hazardous Materials from the Premises to any other location; and Tenant shall not commit or suffer to be committed in or on the Premises or Property any act which would require any reporting or filing of any notice with any governmental agency pursuant to any statutes, laws, codes, ordinances, rules or regulations, present or future, applicable to the Property or to Hazardous Materials.

Tenant agrees that if it shall generate, store, release, spill, dispose of or transfer to the Premises or Property any Hazardous Materials, it shall forthwith remove the same, at its sole cost and

expense, in the manner provided by all applicable Environmental Laws (as hereinafter defined), regardless of when such Hazardous Materials shall be discovered. Furthermore, Tenant shall pay any fines, penalties or other assessments imposed by any governmental agency with respect to any such Hazardous Materials and shall forthwith repair and restore any portion of the Premises or Property which it shall disturb in so removing any such Hazardous Materials to the condition which existed prior to Tenant's disturbance thereof.

Tenant agrees to deliver promptly to Landlord any notices, orders or similar documents received from any governmental agency or official concerning any violation of any Environmental Laws or with respect to any Hazardous Materials affecting the Premises or Property. In addition, Tenant shall, within ten (10) days of receipt, accurately complete any questionnaires from Landlord or other informational requests relating to Tenant's use of the Premises and, in particular, to Tenant's use, generation, storage and/or disposal of Hazardous Materials at, to, or from the Premises.

Tenant shall indemnify, defend (by counsel satisfactory to Landlord), protect, and hold Landlord free and harmless from and against any and all claims, or threatened claims, including without limitation, claims for death of or injury to any person or damage to any property, actions, administrative proceedings, whether formal or informal, judgments, damages, punitive damages, liabilities, penalties, fines, costs, taxes, assessments, forfeitures, losses, expenses, reasonable attorneys' fees and expenses, consultant fees, and expert fees that arise from or are caused in whole or in part, directly or indirectly, by (i) Tenant's use, analysis, storage, transportation, disposal, release, threatened release, discharge or generation of Hazardous Materials to, in, on, under, about or from the Premises, or (ii) Tenant's failure to comply with any Environmental Laws. Tenant's obligations hereunder shall include, without limitation, and whether foreseeable or unforeseeable, all costs (including, without limitation, capital, operating and maintenance costs) incurred in connection with any investigation or monitoring of site conditions, repair, cleanup, containment, remedial, removal or restoration work, or detoxification or decontamination of the Premises, and the preparation and implementation of any closure, remedial action or other required plans in connection therewith. For purposes of this Section 6.2.8, any acts or omissions of Tenant, or its subtenants or assignees or its or their employees, agents, or contractors (whether or not they are negligent, intentional, willful or unlawful) shall be attributable to Tenant.

The term "Hazardous Materials" shall mean and include any oils, petroleum products, asbestos, radioactive, biological, medical or infectious wastes or materials, and any other toxic or hazardous wastes, materials and substances which are defined, determined or identified as such in any Environmental Laws, or in any judicial or administrative interpretation of Environmental Laws.

The term "Environmental Laws" shall mean any and all federal, state and municipal statutes, laws, regulations, ordinances, rules, judgments, orders, decrees, codes, plans, injunctions, permits, concessions, grants, franchises, licenses, agreements or other governmental restrictions relating to the environment or to emissions, discharges or releases of pollutants, contaminants, petroleum or petroleum products, medical, biological, infectious, toxic or hazardous substances or wastes into the environment including, without limitation, ambient air, surface water, ground water or land, or otherwise relating to the manufacture, processing, distribution, use, treatment, storage, disposal, transport or handling of pollutants, contaminants, petroleum or petroleum products, medical, biological, infectious, toxic or hazardous substances or wastes or the cleanup or other remediation thereof.

Landlord represents and warrants to Tenant that, to the best of Landlord's knowledge, as of the date on which Landlord shall deliver possession of the Premises to Tenant, the Premises shall be free from contamination by Hazardous Materials. Landlord further represents and warrants to Tenant that, to the best of Landlord's knowledge, no underground storage tanks exist in the Premises. In the event an underground

storage tank is determined to exist in the Premises, Tenant shall under no circumstances be deemed to be an owner or operator of such tank, and removal and remediation required by law in connection with such tank shall be performed by Landlord at Landlord's sole cost.

If, at any time during the Term, Hazardous Materials shall be found in or on the Premises, then:

(i) with regard to the presence or release of any Hazardous Materials that Tenant shall not have caused, Landlord shall remove or remediate same to the extent required by Environmental Laws, and in compliance therewith, and at Landlord's sole cost; and Landlord agrees to defend, indemnify, and hold each of Tenant harmless from and against any and all costs, damages, expenses, and/or liabilities (including reasonable attorneys' fees) which Tenant may suffer as a result of any claim, suit, or action regarding any such Hazardous Materials (whether alleged or real), and/or regarding the removal and remediation of same.

(ii) Each of Landlord's and Tenant's obligations pursuant to this Article shall survive any expiration and/or termination of this Lease.

Article 7.
Casualty or Taking

7.1 Landlord's Termination. In the event that the Premises or the Property, or shall be taken by any public authority or for any public use or shall be condemned by the action of any public authority, or if the Building shall be destroyed or damaged by fire or casualty in its entirety and Landlord shall choose not to restore the Building, then this Lease may be terminated at the election of Landlord. Such election, which may be made notwithstanding the fact that Landlord's entire interest may have been divested, shall be made by the giving of notice by Landlord to Tenant within sixty (60) days after the date of the taking or casualty.

7.2 Tenant's Termination. If any portion of the Premises or any portion of the Building shall be damaged or destroyed by fire or other casualty to the extent that the operation of Tenant's business in the Premises in the normal course is materially adversely affected, then, within sixty (60) days of such fire or other casualty, Landlord shall submit to Tenant a reasonable engineering estimate as to the estimated length of time to complete such repairs. If the time period **("Estimated Restoration Period")** set forth in such estimate shall exceed one hundred eighty (180) days of the date of such casualty, Tenant may elect, by a notice sent within thirty (30) days after notice of such estimate is sent to Tenant, to terminate this Lease. If such estimate shall fall within the 180-day limit, Tenant shall have no such right to terminate and Landlord shall, subject to the provisions of this Article 7, proceed with due diligence and promptness to reasonably complete the repairs or restoration within such one hundred eighty (180) days, subject always to delays for causes beyond Landlord's reasonable control and the other limitations set forth in this Article 7.

In the event that the Premises or the Building are damaged by fire or other casualty to such an extent so as to render the Premises untenantable, and if Landlord shall fail to substantially complete said repairs or restoration within a period (the "Restoration Period") which is the greater of the Estimated Restoration Period or one hundred fifty (150) days after the date of the casualty for any reason other than Tenant's fault, Tenant may terminate this Lease by giving Landlord written notice as follows:

(a) Said notice shall be given after the expiration of said Restoration Period.

(b) Said notice shall set forth an effective date which is not earlier than thirty (30) days after Landlord receives said notice.

(c) If said repairs or restoration are substantially complete on or before the date thirty (30) days (which thirty-(30)-day period shall be extended by the length of any delays caused by Tenant or Tenant's contractors) after Landlord receives such notice, said notice shall have no further force and effect.

(d) If said repairs or restoration are not substantially complete on or before the date thirty (30) days (which thirty-(30)-day period shall be extended by the length of any delays caused by Tenant or Tenant's contractors) after Landlord receives such notice, the Lease shall terminate as of said effective date.

7.3 Restoration. If neither party elects to so terminate, this Lease shall continue in force. Landlord covenants undertake such restoration with reasonable diligence to the extent permitted by the net proceeds of insurance recovered or damages awarded for such destruction, taking, or condemnation and subject to zoning and building laws or ordinances then in existence. **"Net proceeds of insurance recovered or damages awarded"** refers to the gross amount of such insurance or damages actually made available to Landlord (and not retained by any Superior Lessor or Superior Mortgagee) less the reasonable expenses of Landlord incurred in connection with the collection of the same, including without limitation, fees and expenses for legal and appraisal services. Tenant hereby waives the provisions of Section 227 of the Real Property Law and agrees that the provisions of this Article 7 shall govern and control in lieu thereof. Landlord is not required to repair or replace any equipment, fixtures, furnishings or decorations unless originally installed by Landlord and Tenant shall be Tenant is solely responsible, at Tenant's sole cost and expense, for replacement or repair of Tenant's equipment, fixtures, furnishings, and other personal property that is destroyed or damaged by fire or casualty.

7.4 Award. Irrespective of the form in which recovery may be had by law, all rights to damages or compensation shall belong to Landlord in all cases. Tenant hereby grants to Landlord all of Tenant's rights to such damages and covenants to deliver such further assignments thereof as Landlord may from time to time request. Nothing contained herein shall be construed to prevent Tenant from prosecuting in any condemnation proceedings a claim for relocation expenses, provided that such action shall not affect the amount of compensation otherwise recoverable by Landlord from the taking authority.

7.5 Abatement. If this Lease is not terminated by Landlord or Tenant as a result of fire or other casualty, the Fixed Rent and any recurring Additional Rent shall be abated with respect to the Premises or the portion thereof rendered untenantable until such time as the Premises are rendered wholly tenantable. In the event of termination for fire or other casualty or in the event of a taking or condemnation, Fixed Rent and the any recurring payment of Additional Rent shall abate as of the date of such termination, or the date of such Taking, whichever shall first occur. If any part of the Premises shall be subject to such a taking or condemnation and this Lease shall not be so terminated, the Fixed Rent and any recurring payment of Additional Rent shall be abated pro-rata based upon the rentable area of the Premises that is the subject of such taking or condemnation.

Article 8.
Defaults

8.1 Default of Tenant. (i) If Tenant shall default in its obligations to pay the Annual Fixed Rent or Additional Rent or any other charges under this Lease when due or shall default in complying with its obligations under Subsection 6.1.11 of this Lease and if any such default shall continue for ten (ten) days after written notice from Landlord designating such default, or (ii) if as promptly as possible but in any event within thirty (30) days after written notice from Landlord to Tenant specifying any default or defaults other than those set forth in clause (i),including but not limited to Tenant deserting the

Premises, Tenant has not cured the default or defaults so specified (unless such default or defaults are incapable of being cured within thirty (30) days, in which case no such default or defaults shall be deemed a Default of Tenant provided that Tenant has commenced to cure such default or defaults within thirty (30) days after notice and diligently pursues the same to completion), then, and in any of such cases indicated in clauses (i) and (ii) hereof (collectively and individually, a **"Default of Tenant"**), Landlord may give notice to Tenant terminating this Lease and the Term hereof, which notice shall specify the date of termination which shall be at least twenty (20) days from the date of such notice, whereupon on the date so specified, if the default is not so cured, the Term of this Lease and all of Tenant's rights and privileges under this Lease shall expire and terminate but Tenant shall remain liable as hereinafter provided.

8.2 Remedies. In the event of any termination pursuant to Section 8.1, Tenant shall pay the Annual Fixed Rent, Additional Rent and other charges payable hereunder up to the time of such termination. Thereafter, whether or not the Premises shall have been re let, Tenant shall be liable to Landlord for, and shall pay to Landlord the Annual Fixed Rent, Additional Rent and other charges which would be payable hereunder for the remainder of the Term of this Lease had such termination not occurred, less the net proceeds, if any, of any reletting of the Premises. Tenant shall pay such damages to Landlord monthly on the days on which the Annual Fixed Rent, Additional Rent or other charges would have been payable hereunder if the Term of this Lease had not been so terminated. Notwithstanding the foregoing, Landlord agrees to use commercially reasonable efforts to mitigate its damages resulting from any default of Tenant.

Nothing contained in this Lease shall, however, limit or prejudice the right of Landlord to prove for and obtain in proceedings for bankruptcy or insolvency by reason of the termination of this Lease, an amount equal to the maximum allowed by any statute or rule of law in effect at the time when, and governing the proceedings in which, the damages are to be proved, whether or not the amount be greater than, equal to, or less than the amount of the loss or damages referred to above.

In case of any Default of Tenant, re-entry, expiration and repossession by summary proceedings or otherwise, Landlord may (i) relet the Premises or any part or parts thereof, either in the name of Landlord or otherwise, for a term or terms which may at Landlord's option be equal to or less than or exceed the period which would otherwise have constituted the balance of the Term of this Lease and may grant concessions or free rent to the extent that Landlord considers advisable and necessary to relet the same and (ii) may make such alterations, repairs and decorations in the Premises as Landlord in its sole judgment considers advisable and necessary for the purpose of reletting the Premises; and the making of such alterations, repairs and decorations shall not operate or be construed to release Tenant from liability hereunder as aforesaid. Landlord shall in no event be liable in any way whatsoever for failure to relet the Premises, or, in the event that the Premises are relet, for failure to collect the rent under such reletting.

Notwithstanding anything set forth in this Lease to the contrary, Landlord acknowledges that its rights of reentry into the Premises set forth in this Lease do not confer on Landlord the authority to manufacture and/or dispense on the Premises medical marihuana in accordance with Article 33 of the Public Health Law and Landlord agrees to provide the New York State Department of Health, Mayor Erastus Corning 2nd Tower, The Governor Nelson A. Rockefeller Empire State Plaza, Albany, N.Y. 12237, with notification by certified mail of its intent to reenter the Premises or to initiate dispossess proceedings or that the Lease is due to expire, at least 60 days prior to the date on which the Landlord intends to exercise a right of reentry or to initiate such proceedings or at least 60 days before expiration of the Lease.

8.3 Landlord's Right to Cure Defaults. At any time, Landlord shall have the right, but shall not be required, to pay such sums or do any act which requires the expenditure of monies which may be necessary or appropriate by reason of the failure or neglect of Tenant to comply with any of its obligations under this Lease beyond all applicable notice and cure periods (provided, however, in the case of an emergency, Landlord shall have no obligation to provide any advance notice or wait for the expiration of any applicable cure period before exercising its rights under this Section 8.5), and in the event of the exercise of such right by Landlord, Tenant agrees to pay to Landlord forthwith upon demand, as Additional Rent, all such sums including reasonable attorney's fees, together with interest thereon at a rate (the "Default Rate") equal to the lesser of 6% over the Prime Rate or the maximum rate allowed by law. "Prime Rate" shall mean a rate of interest, determined daily, which is two (2) percentage points above the 14-day moving average closing trading price of 90-day Treasury Bills.

8.4 Holding Over. Any holding over by Tenant after the expiration or early termination of the Term of this Lease shall be treated as a daily tenancy at sufferance at a rate equal to 1.5 times the Annual Fixed Rent in effect immediately prior to the expiration or earlier termination of the Term plus Additional Rent and other charges herein provided (prorated on a daily basis). Otherwise, all of the covenants, agreements and obligations of Tenant applicable during the Term of this Lease shall apply and be performed by Tenant during such period of holding over as if such period were part of the Term of this Lease.

8.5 Effect of Waivers of Default. Any consent or permission by Landlord to any act or omission by Tenant shall not be deemed to be consent or permission by Landlord to any other similar or dissimilar act or omission and any such consent or permission in one instance shall not be deemed to be consent or permission in any other instance.

8.6 No Waiver, Etc. The failure of Landlord or Tenant to seek redress for violation of, or to insist upon the strict performance of, any covenant or condition of this Lease shall not be deemed a waiver of such violation nor prevent a subsequent act, which would have originally constituted a violation, from having all the force and effect of an original violation. The receipt by Landlord of rent with knowledge of the breach of any covenant of this Lease shall not be deemed to have been a waiver of such breach by Landlord, or by Tenant, unless such waiver be in writing signed by the party to be charged. No consent or waiver, express or implied, by Landlord or Tenant to or of any breach of any agreement or duty shall be construed as a waiver or consent to or of any other breach of the same or any other agreement or duty.

8.7 No Accord and Satisfaction. No acceptance by Landlord of a lesser sum than the Annual Fixed Rent, Additional Rent or any other charge then due shall be deemed to be other than on account of the earliest installment of such rent or charge due, nor shall any endorsement or statement on any check or any letter accompanying any check or payment as rent or other charge be deemed an accord and satisfaction, and Landlord may accept such check or payment without prejudice to Landlord's right to recover the balance of such installment or pursue any other remedy in this Lease provided.

8.8 Limitation. In no event shall either party be liable for punitive or consequential damages under this Lease.

Article 9.
Rights of Holders, Landlord's Representations

9.1 Subordination. This Lease, and all rights of Tenant hereunder, shall be subject and subordinate to any ground or master lease, and to any and all mortgages, which may now or hereafter affect the Building or the Property and/or any such lease. In the event Landlord refinances the Property

during the term of this Lease, the holder of any such refinanced mortgage shall execute and deliver to Tenant an agreement ("SNDA Agreement"), in form reasonably satisfactory to Tenant, providing that such holder will recognize this Lease and not disturb Tenant's possession of the Premises in the event of foreclosure if Tenant is not then in default hereunder beyond any applicable cure period. Tenant agrees, upon receipt of such SNDA Agreement, to execute such further reasonable instrument(s) as may be necessary to subordinate this Lease to the lien of any such mortgage.

9.2 Landlord's Representations. Landlord warrants and covenants that Landlord has good and clear record and marketable title to the Premises, in fee simple absolute. Landlord also warrants and covenants that: there are no restrictive covenants or other agreements, and no zoning or other Laws, and no other legal impediment, any of which would prevent Tenant from occupying the Premises for the purposes herein provided. Landlord shall not enter into any restrictive covenants leases, or other agreements, which would prevent Tenant from occupying the Premises for the purposes herein provided. Landlord warrants and represents to Tenant that, to the best of Landlord's knowledge as of the date hereof, Landlord has not received any notices of violations, orders, or notices of violations of laws, rules or regulations with respect to the Premises.

Article 10.
Miscellaneous Provisions

10.1 Notices. All notices, requests, demands, consents, approvals or other communications to or upon the respective parties hereto shall be in writing and delivered by hand or mailed by certified or registered mail, return receipt requested, or a nationally recognized courier service that provides a receipt for delivery such as Federal Express, United Parcel Service or U.S. Postal Service Express Mail and shall be effective on the date delivered (or the first date such delivery is attempted and refused) in writing to the party to which such notice, request, demand, consent, approval or other communication is required or permitted to be given or made under this Lease, addressed if intended for Landlord, to the Original Address of Landlord set forth in Section 1.1 of this Lease (or to such other address or addresses as may from time to time hereafter be designed by Landlord by like notice); and if intended for Tenant, addressed to Tenant at the Original Address of Tenant set forth in Section 1.1 of this Lease (or to such other address or addresses as may from time to time hereafter be designated by Tenant by like notice).

10.2 Quiet Enjoyment; Landlord's Right to Make Alterations, Etc. Landlord agrees that upon Tenant's paying the rent and performing and observing the agreements, conditions and other provisions on its part to be performed and observed, Tenant shall and may peaceably and quietly have, hold and enjoy the Premises during the Term hereof without any manner of hindrance or molestation from Landlord or anyone claiming under Landlord, subject, however, to the terms of this Lease.

10.3 Waiver of Jury Trial

LANDLORD AND TENANT HEREBY WAIVE TRIAL BY JURY IN ANY ACTION, PROCEEDING OR COUNTERCLAIM BROUGHT BY EITHER OF THEM AGAINST THE OTHER IN CONNECTION WITH THIS LEASE.

10.4 Lease not to be Recorded.

Tenant agrees that it will not record this Lease. Both parties shall, upon the request of either (and at the expense of the requesting party), execute and deliver a notice or short form of this Lease in such form, if any, as may be acceptable for recording with the land records of the governmental entity responsible for keeping such records for the City of Poughkeepsie, New York. In no event shall such

document set forth the rent or other charges payable by Tenant pursuant to this Lease; and any such document shall expressly state that it is executed pursuant to the provisions contained in this Lease and is not intended to vary the terms and conditions of this Lease

10.5 Limitation of Landlord's Liability. The term "Landlord", so far as covenants or obligations to be performed by Landlord are concerned, shall be limited to mean and include only the owner or owners at the time in question of Landlord's interest in the Property, and in the event of any transfer or transfers of such title to said Property, Landlord (and in case of any subsequent transfers or conveyances, the then grantor) shall be concurrently freed and relieved from and after the date of such transfer or conveyance, without any further instrument or agreement, of all liability with respect to the performance of any covenants or obligations on the part of Landlord contained in this Lease thereafter to be performed, it being intended hereby that the covenants and obligations contained in this Lease on the part of Landlord, shall, subject as aforesaid, be binding on Landlord, its successors and assigns, only during and in respect of their respective period of ownership of such interest in the Property. Notwithstanding the foregoing, in no event shall the acquisition of Landlord's interest in the Property by a purchaser which, simultaneously therewith, leases Landlord's entire interest in the Property back to Landlord, be treated as an assumption by operation of law or otherwise, of Landlord's obligations hereunder. Tenant shall look solely to such seller-lessee, and its successors from time to time in title, for performance of Landlord's obligations hereunder. The seller-lessee, and its successors in title, shall be Landlord hereunder unless and until such purchaser expressly assumes in writing Landlord's obligations hereunder.

10.6 Brokerage. Each of the parties hereby warrants and represents to the other that it has dealt with no brokers in connection with the consummation of this Lease, other than Asher Flaum on behalf of Flaum Management Company, Inc. (the "Broker"), and in the event of any brokerage claims or liens, other than by Broker, against a party (the "Innocent Party") predicated upon or arising out of prior dealings with the other party, such other party agrees to defend the same and indemnify and hold the Innocent Party harmless against any such claim, and to discharge any such lien. Landlord shall pay the Broker pursuant to a separate agreement between Landlord and Broker.

10.7 Applicable Law and Construction. This Lease shall be governed by and construed in accordance with the laws of New York and if any provisions of this Lease shall to any extent be invalid, the remainder of this Lease shall not be affected thereby. All understandings and agreements heretofore made between the parties are merged in this Lease and any other such written agreement(s) made concurrently herewith, which alone fully and completely express the agreement of the parties and which are entered into after full investigation, neither party relying upon any statement or representation not embodied in this Lease or any other such written agreement(s) made concurrently herewith. This Lease may be amended, and the provisions hereof may be waived or modified, only by instruments in writing executed by Landlord and Tenant. The reference contained to successors and assigns of Tenant is not intended to constitute a consent to assignment of Tenant. Except as otherwise set forth in this Lease, any obligations of Tenant (including, without limitation, rental and other monetary obligations, repair obligations and obligations to indemnify Landlord), shall survive the expiration or earlier termination of this Lease, and Tenant shall immediately reimburse Landlord for any expense incurred by Landlord in curing Tenant's failure to satisfy any such obligation (notwithstanding the fact that such cure might be effected by Landlord following the expiration or earlier termination of this Lease).

10.8 Venue. Each party hereby irrevocably consents to the exclusive jurisdiction of the courts located in and for the County of Dutchess and State of New York and of the federal courts located in the Southern District of New York for all purposes in connection with any action, suit or proceeding which arises out of or relates to this Lease. To the fullest extent it may effectively do so under applicable law,

each party hereby irrevocably waives and agrees not to assert, by way of motion, as a defense or otherwise, any claim that it is not subject to the jurisdiction of any such court, any objection which it may now or hereafter have to the laying of the venue of any such action, suit or proceeding brought in any such court and any claim that any such action, suit or proceeding brought in any such court has been brought in an inconvenient forum.

10.9 Operating Expenses / Real Estate Taxes. In lieu of Tenant reimbursing Landlord or making any other payments for Landlord's operation of the Property (including refuse removal), for Landlord's payment of real estate taxes with respect to the Property or for Landlord's payment of insurance thereon, Tenant shall pay Landlord a fixed amount of $1,529.50 per month ($18,354 per annum) during the Term commencing on the Occupancy Date which amounts shall be deemed Additional Rent pursuant to Section 4.2 above and shall be payable in the same manner as monthly payments of Fixed Rent per Section 4.1 above.

[Signatures appear on following page]

WITNESS the execution hereof under seal on the day and year first above written.

LANDLORD:

KANEWPO, LLC

By: Alan Daniels

Name: Alan Daniels
Title: Managing Partner

TENANT:

CITIVA MEDICAL, LLC

By: Frank Turano

Name: FRANK TURANO
Title: C.F.O.

EXHIBIT A

PLAN SHOWING THE PREMISES

See attached plan.

EXHIBIT B

LANDLORD WORK

a. Construct a demising wall
b. Add an electrical service and separate the current two spaces electrical
c. Separate the existing HVAC
d. Landlord will remove first 10' feet of existing manufactured wood flooring nearest to entrance and replace with ceramic tile in a color to complement existing wood flooring and will repair balance of existing wood flooring to make flooring look consistent throughout
e. Add 2nd bathroom
f. Remove existing doorway to CREW's hallway

EXHIBIT C

CONFIRMATION OF LEASE PROVISIONS

THIS CONFIRMATION OF LEASE PROVISIONS (the **"Agreement"**), made and agreed upon this ____ day of _____ , 2015, by and between _____, a_____ (hereinafter referred to as **"Tenant"**) and _____, a _____ (hereinafter referred to as **"Landlord"**).

Landlord and Tenant entered into a certain lease dated _____, 2015(**"Lease"**) covering certain Premises designated on the _____floor in the building known as _____ as more particularly described in said Lease.

For the purpose of confirming the establishment of the Occupancy Date, as required by Section 3 of said Lease, Landlord and Tenant hereby agree that:

1. The date of , 20_, is hereby established as the **"Occupancy Date"** referred to in said Lease;

2. The date of , 20_, is hereby established as the **"Expiration Date"** of the Term of said Lease;

IN WITNESS WHEREOF, the parties hereto have executed this instrument the day and year first above written.

LANDLORD:

_____

By: _____
Name:
Title:

TENANT:

_____

By:_____
Name:
Title:

CITIVA MEDICAL

May 28th, 2015

Asaf Cohen
Tel: 347-628-5251
Email: acegeil@gmail.com

On behalf of Citiva Medical, LLC we are pleased to present you with the following proposal to lease the store located at 35 First Avenue New York, New York.

Proposal To Lease

Premises:	Entire Ground Floor and basement of 35 First Avenue New York, New York.
Tenant:	Citiva Medical, LLC
Lease Term:	5 Years with One (1) 5-Year Option
Option Rent:	10% increase for each Option
Real Estate Taxes:	Tenant to pay 100% of total real estate tax bill (block 444 lot 42)
Rent:	$8,000.00 per Month for Months 1-3; $15,000 per Month thereafter
Rent Escalation:	3% starting year 2
Security Deposit:	three months
Demolition Clause:	Landlord to have the right to cancel the lease with a 6 months notice starting 31st month from commencement day
Lease Commencement:	Upon Execution
Rent Commencement	June 1st, 2015
Termination:	Tenant has the right to terminate the Lease at its sole discretion at any time during the first 3 months with 15 days' notice to Landlord
Landlord Work:	Landlord to remove existing equipment and clean up the space.
Free Rent:	Two months (Month 4 and month 5)
Broker:	Asaf Cohen and Asher Flaum shall each receive a commission equal to 1/2 months' rent
Utilities:	Separately metered responsibility of Tenant

ACCEPTED _____ DATE 5/28/15
Landlord
MANNY ASHOURZADEH

ACCEPTED _____ DATE 5/28/15
tenant
Kim Volman

CITIVA MEDICAL LLC

MEDICAL MARIHUANA PROGRAM

ATTACHMENT D

OPERATING PLAN

CITIVA MEDICAL LLC

MEDICAL MARIHUANA PROGRAM

ATTACHMENT D

OPERATING PLAN – TABLE OF CONTENTS

Section 1 – Manufacturing
Section 2 – Transport and Distribution
Section 3 – Dispensing and Sale
Section 4 - Devices
Section 5 – Securing and Control
Section 6 – Standard Operating Procedure
Section 7 – Quality Assurance Plans
Section 8 – Returns, Complaints, Adverse Events and Recalls
Section 9 – Product Quality Assurance
Section 10 - Recordkeeping

CITIVA MEDICAL LLC

MEDICAL MARIHUANA PROGRAM

ATTACHMENT D

OPERATING PLAN – SECTION 1 – Manufacturing

SECTION 1

Manufacturing

Citiva Medical LLC

1 TABLE OF CONTENTS

2 MANUFACTURING....2
2.1 INTRODUCTION....2
2.2 OVERARCHING APPROACH....2
2.3 ORGANIZATION CHART....4
2.4 DESCRIPTION OF ACTIVITIES FOR MANUFACTURING....4
2.4.1 CULTIVATION....4
2.4.2 PROCESSING....5
2.4.3 PACKAGING AND SEALING....6
2.5 WORK FLOW DIAGRAM....6
2.6 FACILITY-WIDE SECURITY PROTOCOLS....6
3 CULTIVATION....7
3.1 INTRODUCTION....7
3.2 GENERAL DESCRIPTION OF WORK ACTIVITIES....8
3.3 WORK FLOW DIAGRAM....10
3.4 CULTIVATION FACILITY POLICIES AND PROCEDURES....10
3.4.1 INTRODUCTION....10
3.4.2 OPENING PROCEDURES....10
3.4.3 CLOSING PROCEDURES....11
3.4.4 DAILY OBSERVATIONS....11
3.4.5 DAILY INVENTORY COUNT....11
3.4.6 PLANT FEEDING....12
3.4.7 NUTRIENT REGIMEN....12
3.4.8 FOLIAR SPRAY....13
3.4.9 CLONING....13
3.4.10 PRUNING....13
3.4.11 TRANSPLANTING....14
3.4.12 RESERVOIR CHANGE....14
3.4.13 END OF CYCLE CLEANING....15
3.4.14 PLANT TAGGING....16
3.4.15 MOLD DETECTION....16
3.5 CULTIVATION PROCESSES INTRODUCTION....16
3.5.1 CLEANLINESS & SAFETY....16
3.6 PROPAGATION PROTOCOLS AND PROCEDURES....17
3.7 PREPARATION....17
3.8 PROCESS....17
3.9 MAINTENANCE....18
3.9.1 CLONE STAGES 1 AND 2....18
3.9.2 VEGETATIVE....19
3.10 STAGE 1 VEGETATIVE PROTOCOL....20
3.10.1 PREPARATION....20
3.10.2 PROCESS....20
3.10.3 MAINTENANCE....20
3.11 STAGE 2 VEGETATIVE PROTOCOL....21
3.11.1 PREPARATION....21
3.11.2 PROCESS....21

3.11.3 MAINTENANCE 21
3.12 STAGE 3 VEGETATIVE PROTOCOL 22
3.12.1 PREPARATION 22
3.12.2 PROCESS 22
3.12.3 MAINTENANCE 22
3.13 FLOWER SYSTEM PROTOCOLS 23
3.13.1 REPLANT PROTOCOL: (FIRST DAY OF SCHEDULE) 23
3.13.2 FLUSH PROTOCOL (ONE (1) WEEK BEFORE HARVEST) 24
3.14 PRODUCTION ROUTINE MAINTENANCE 24
3.14.1 BULB CHANGES/DISPOSAL 24
3.14.2 MAXX FANS 25
3.14.3 BALLASTS 25
3.14.4 CLONE ROOMS 25
3.14.5 VEG AREA 25
3.14.6 FLOWER ROOMS 25
3.14.7 DRYING ROOM 26
3.14.8 RESERVOIRS 26
4 BIOSECURITY PLAN 26
4.1 DESCRIPTION AND APPROACH TO BIOSECURITY 26
4.1.1 FIRST PRINCIPLE – PREVENTION 27
4.1.2 SECOND PRINCIPLE – FACILITY HYGIENE 28
4.1.3 THIRD PRINCIPLE – ACTIVE OBSERVATION AND SCOUTING 28
4.1.4 FOURTH PRINCIPLE – INTEGRATED PEST MANAGEMENT (IPM) 28
4.1.5 FIFTH PRINCIPLE – USE OF NOP AND OMRI-CERTIFIED SUBSTANCES 29
4.2 PEST ASSESSMENT PROTOCOL 29
4.3 EXAMPLE DISEASE AND PEST CONTROL PROTOCOLS 30
4.3.1 DISINFECTION OF SURFACES BY SANIDATE (OMRI) 30
4.3.2 PYGANIC DRENCH PROTOCOL (OMRI) 30
4.3.3 PYGANIC SPRAY PROTOCOL (OMRI) 31
4.3.4 AZATROL (AZADIRACHTIN) PROTOCOL (OMRI) 31
5 HARVESTING 31
5.1 HARVEST PROCESS VERVIEW 31
5.2 FINAL PEST ASSESSMENT ROTOCOL 31
5.3 HARVEST DETAILED ROCEDURES 32
5.3.1 INITIAL STEPS 32
5.3.2 SYSTEM PREPARATION PROTOCOL: (DAY AFTER HARVEST) 32
5.3.3 DRYING STAGE 33
5.3.4 CULLING/DISPOSAL 33
5.3.5 ROUGH TRIM 33
6 AIR MITIGATION PLAN 33
6.1 BEST MANAGEMENT PRACTICES FOR COMMERCIAL MEDICAL MARIHUANA CULTIVATION FACILITIES 33
6.2 VENTILATION AND ODOR CONTROL 34
7 PROCESSING 35
7.1 INTRODUCTION 35
7.2 PHYSICAL ATTRIBUTES 35
7.3 EXPERTISE 35
7.4 PROCESSING METHODOLOGY 35

7.5 EXTRACTION METHODOLOGY....36
7.6 SPECIFIC FEATURES AND CHARACTERISTICS....37
7.6.1 PROCESSING AND EXTRACTION FACILITY....37
7.6.2 QUALITY CONTROL TESTING FACILITY....38
7.6.3 HEALTH AND CONSUMER PROTECTION....38
7.6.4 RESEARCH AND DEVELOPMENT....39
7.6.5 FORMS AND BRANDS....39
7.6.6 SAFETY AND SECURITY....40
7.6.7 TRACKING PROGRAM AND PROCEDURES....40
7.7 DESIGN AND CLEAN ROOM ATTRIBUTES....41
7.7.1 FACILITY DESIGN AND MATERIALS/EQUIPMENT (AND DIAGRAMS)....41
7.7.2 CLEAN ROOM ATTRIBUTES AND MATERIALS/EQUIPMENT (AND DIAGRAMS)....44
7.8 PREPARATION, PROCESS AND PRODUCTS....50
7.8.1 INTRODUCTION....50
7.8.2 CO2 PROCESSING SCHEMATIC....50
7.8.3 PREPARATION – CLIPPINGS AND PARTICLE SIZING....51
7.8.4 PROCESS – STEPS AND EQUIPMENT....51
7.8.5 PRODUCTS – PRODUCTION AND TYPES....55
8 PACKAGING AND LABELING....57
8.1 PACKAGING OF TINCTURE PRODUCTS....57
8.2 PACKAGING OF VAPORIZATION OIL....57
8.3 PACKAGING OF POWDER-EXTRACT CAPSULES....58
9 MAINTENANCE....58
10 DESTRUCTION OF MATERIALS, SUB-LOTS, LOTS AND PRODUCTS....59
10.1 PROCEDURE TO QUARANTINE AND DESTROY MATERIALS, SUB-LOTS, LOTS AND PRODUCTS....59
11 EXHIBITS....61
11.1 EXHIBIT A – EXTRACTION VESSELS....61
11.2 EXHIBIT B – COLLECTORS AND FILTERS....62
11.3 EXHIBIT C – ROTARY-SCREW AIR COMPRESSOR....63
11.4 EXHIBIT D – RECIRCULATING CHILLER....64
11.5 EXHIBIT E – AIR-DRIVEN LIQUID CO2 PUMP (MIDDLE OF PHOTO DISPLAYS THE BLUE LIQUID CO2 PUMP)....65
11.6 EXHIBIT F – RESERVOIR OF LIQUID CO2 PUMP (RIGHT SIDE OF PHOTO DISPLAYS THE RESERVOIR)....66
11.7 EXHIBIT G – PRE-EXTRACTOR RESERVOIR (LEFT SIDE OF PHOTO DISPLAYS THE PRE-EXTRACTOR)....67
11.8 EXHIBIT H – HEAT EXCHANGERS TO CONVERT GASEOUS CO2 TO LIQUID CO2....68
11.9 EXHIBIT I – PACKAGING....69
11.9.1 TINCTURES....69
11.9.2 VAPORIZATION OILS....69
11.9.3 CAPSULES....70
11.10 EXHIBIT J – LABELS....71
11.11 EXHIBIT K – PATIENT SAFETY INSERTS....72

2 MANUFACTURING

2.1 INTRODUCTION

Citiva Medical's first commitment has always been, and always will be, to the patient. This means that the product Citiva Medical produces for its patients will always be of the highest quality. The plants, the intermediate products, and the final approved medical marihuana products are tested by Citiva Medical's Quality Control at each step in the manufacturing process to ensure the safety, purity, and potency of the final brand and form.

Located in the State of New York, Citiva Medical is a vertically integrated medical marihuana business operating in full compliance with New York State laws and regulations and local municipality laws. Our mission is to provide certified New York patients with the highest quality final approved medical marihuana products at a reasonable cost. Citiva Medical's combination of experience in the regulated medical marihuana business across several states, the business expertise of principals from the food and drug industry, and state-of-the art Quality Assurance provides confidence that we will achieve our mission to serve the patients of the State of New York.

2.2 OVERARCHING APPROACH

"Manufacturing" is a multistep continuous process: Marihuana is cultivated, harvested, extracted and processed into feedstock oils, prepared into approved medical marihuana brands and forms, and packaging for sale at the Dispensaries. The feedstock oils are blended to make finished bulk oils that meet stringent regulatory specifications for each of the five (5) brands allowed by the State. Bulk oils are packaged into deliverable medications in three forms, vaporization oil, tincture for sub-lingual administration, and capsules, compliant with State regulations.

Citiva Medical's approach to manufacturing starts with three (3) guiding principles: Positive Controls for Quality, Quickness to Manufacture, and Risk Management through the Manufacturing Process:

1) POSITIVE CONTROLS

a) At each manufacturing stage, monitoring, recording and control over manufacturing

events is paramount to security, safety, consistency and quality. Normal events proceed in accordance with Standard Operating Procedures (SOPs). Adverse events comprise their own SOPs which comply with our Quality Assurance and Quality Control Plans. Monitoring provides the measurements for our records. These measurements are compared to our established thresholds for control decisions. Monitoring equipment must be "spot" calibrated to catch deviations. A recorded and monitored chain-of-custody is established between each employee to create positive control at a fine level of operational granularity. If thresholds are exceeded this plan allows early detection and subsequent corrective action.

2) QUICK TO MARKET

a) Within six (6) months of the date of issuance of our registration, Citiva Medical must begin operations in compliance with regulation 1004.9(a). After careful consideration, it was determined that the most reliable option for meeting regulations in the winter months of 2015 would be to carry out our first cultivation cycles in an Indoor Cultivation Facility versus our planned greenhouses. Greenhouses can take more time to scale-up in winter months, although they ultimately offer a lower cost of medical marihuana products, and arguably higher levels of whole plant oils that may have medicinal value. With this plan we will be able to begin cultivation operations within a few weeks of receiving our selection as a Registered Organization (RO), in a tightly controlled environment that ensures success. Following this, our Greenhouse Cultivation Facility will be built and scaled-up during the winter of 2015 and spring of 2016 and greenhouse operations will begin in late spring of 2016.

b) This Indoor Cultivation Facility will later be repurposed to inventory and processing operations as the Citiva Medical business expands. Virtually all of the equipment in the Indoor Cultivation Facility will be incorporated into our Greenhouse Cultivation Facility as it expands over the first year of operation.

3) RISK MANAGEMENT

a) Citiva Medical will utilize a quantitative methodology to evaluate risks as they relate to redundancy, disaster recovery and contingency planning. For example, critical pieces of equipment will have fail-over planning, so that the Manufacturing Facility can continue to operate, if at a slightly lower output, in the event of a failure, providing business continuity and a continuous supply of products to the certified patients of New York.

2.3 ORGANIZATION CHART

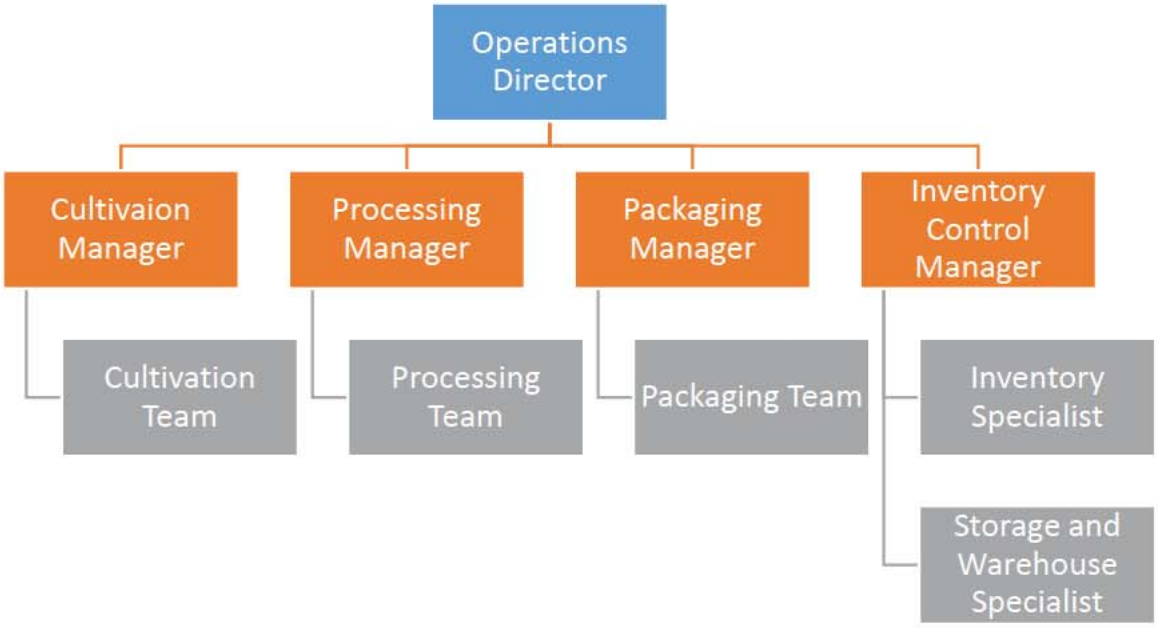

2.4 DESCRIPTION OF ACTIVITIES FOR MANUFACTURING

2.4.1 CULTIVATION

Cultivation includes all stages of growing marihuana plants from initial clones to final harvest and drying, before being sent to the Processing Facility. This intensive agriculture relies on three elements for success: strong biosecurity, integrated recordkeeping and fully-trained and supported staff knowledgeable in Good Agricultural and Good Handling Practices (GAP/GHP)

1) STRONG BIOSECURITY

a) The key to a consistently healthy crop can only be accomplished by controlled environment agriculture. Towards that end we will construct a world class Greenhouse/Head house Cultivation Facility. It is specifically designed it to meet the needs of medicinal marihuana cultivation. An integral part of both the design and operation of the Cultivation Facility is Biosecurity. Crop biosecurity is defined as a set of preventive measures to reduce risk to the crop from insects and microorganisms (fungi, bacteria and viruses).

2) INTEGRATED RECORDKEEPING

a) The State of New York will select the "Seed-to-Sale" software for tracking, record keeping, record retention and surveillance systems, relating to all medical marihuana at every stage including cultivating, possessing of marihuana, and manufacturing, delivery, transporting, distributing, sale and dispensing by Citiva Medical. We will comply with all laws and regulations to ensure that our recordkeeping meets and

exceeds the New York regulations.

3) STAFF KNOWLEDGEABLE IN GAP/GHP

a) Citiva Medical will invest in its workforce to ensure that the practices defined by the US Department of Agriculture as GAP/GHP are used in all aspects of indoor and greenhouse cultivation of the medical marihuana. This will help ensure that the plants that are grown meet the highest standards for health, safety and purity.

2.4.2 PROCESSING

Processing comprises the events whereby dried plant material is selected and converted through an extraction process to feedstock oils that are blended to create finished bulk oils. The processing methods have been designed around the following criteria:

1. SECURITY OF WASTE PLANT MATTER

a. Our method of processing reduces plant matter to a material with no value of diversion
b. Our dust collection method includes a monitor point and returns dust to processing

2. LOT TRACEABILITY, MONITORING, RECORDING AND CONTROL

a. A harvest's provenance follows it through the manufacturing process and into final retail units. This allows for precise control over recall events.

3. SCALABILITY

a. Our method allows for fast scale-up as patient demand increases

4. SAFETY OF WORKERS

a. Our method uses lower pressures, multiple safety measures and control of all volatile gases.
b. Our method minimizes risks of spillage. Material is decanted from stage to stage in a closed system as much as possible. Tests are performed at each step to monitor yield and composition.

5. CONSISTENCY OF QUALITY MEDICINE

a. Our method does not depend on the incoming material for the final composition of the medicine. Feed-stocks are produced to use in the final blending process. This allows for exacting consistency of each lot of final oil.

6. MANUFACTURING THROUGHPUT AND EFFICIENCY

a. Our method allows for approximately five (5) times the throughput of CO2 extraction

alone with greater flexibility and much higher efficiency of extraction.

2.4.3 PACKAGING AND SEALING

Citiva Medical's approach to packaging and sealing is summed up in our policies and procedures on Quality. We have instituted a Quality Assurance Program to aid our efforts to prevent abuse, diversion and other illegal or unauthorized activity. Constant monitoring by our integrated surveillance program and security officers combined with spot checks ensure that the medical marihuana products are properly packaged and not diverted in an unlawful manner. Our Quality Control Program ensures that all lots, forms and brands are tested for quality, purity and potency and that samples are retained for future tests, audits and archiving. With an active Quality Program, under the direction of our Chief Quality Assurance Officer and the State-selected Seed-to-Sale software for recordkeeping, we will deliver safety-assured packaged and sealed approved medical marihuana to the Dispensaries for sale.

2.5 WORK FLOW DIAGRAM

2.6 FACILITY-WIDE SECURITY PROTOCOLS

Redacted Pursuant to N.Y. Public Officers Law, Art. 6

Redacted Pursuant to N.Y. Public Officers Law, Art. 6

3 CULTIVATION

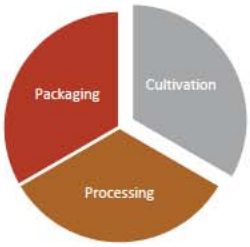

3.1 INTRODUCTION

Citiva Medical is committed to delivering the necessary brands and forms of approved medical marihuana products to the registered patients of the State of New York. We will implement a phased approach to manufacturing that enables "selection-to-medicine" in the required six (6) month timeframe. This forward-looking approach will allow Citiva Medical to be ready with brands and forms of medicine for sale to the registered patients of New York on January 5, 2016 – meeting the required "selection-to-medicine" period of six (6) months. Our long term plans include a 90,000 sq. ft. glass greenhouse and headhouse, but the timeline for the building of and cultivating in that facility would prevent us from meeting the six-(6)-month deadline for production of approved medical marihuana products. Citiva Medical has committed funds right now to solve the challenging schedule deadline to produce medicine in a timely manner. Prior to selection as a Registered Organization (RO), Citiva Medical will construct a 20,000 sq. ft. Indoor Cultivation Facility that will be ready to start cultivation when Citiva Medical is selected as an RO in July. This aggressive

approach will ensure that we meet the six-(6)-month deadline for delivery of medicine. In this risk-mitigating advanced preparation step, we will build the Indoor Cultivation Facility at the same location that the larger glass Greenhouse Cultivation Facility will be built. When construction on the greenhouse is initiated after Citiva Medical's selection as an RO, plants will already be in cultivation in the adjacent Indoor Cultivation Facility. By December, when the new greenhouse is finished and just starting cultivation, the first crop of medical marihuana will be harvested from the Indoor Cultivation Facility. The plant material will be processed on site, in the Citiva Medical Processing Facility and products will be ready for sale and distribution by January 1, 2016.

The phased strategy to establish the Citiva Cultivation Facilities is a conservative approach to ensure that products are available in the near term, with the capability for expansion as demand for approved products increases. 2015's Phase 1 of the Citiva Medical plan for cultivation facilities includes the construction of the 12,000 sq. ft. Indoor Cultivation Facility before RO selection, followed by early operations as soon as the RO selection is made. Next in line, is the construction of the 20,000 sq. ft. Greenhouse Cultivation Facility with its 30,000 sq. ft. Headhouse that supports all cultivation operations and the Processing Facility, in a separate building adjacent to the Cultivation Facilities. The greenhouse and processing buildings will take about five (5) months to complete. The drying room and the Processing Facility will be ready when the first harvest is made from the Indoor Cultivation Facility. A second phase of greenhouse construction will take place, Phase 2 of Cultivation Facility development, will take place in 2016 and beyond with the build-out and completion of the remaining 40,000 sq ft. of greenhouse facilities to create a total of 60,000 sq. ft. of greenhouse cultivation and 12,000 sq. ft. of indoor cultivation, an ample space to provide the approved medical marihuana products for the Citiva Medical customers across the State of New York.

3.2 GENERAL DESCRIPTION OF WORK ACTIVITIES

Our facility emphasizes Biosecurity through dedicated cultivation work flow and cultivation staff protocol to ensure no outside contaminants enter the cultivation portion of the building. This is essential in order to ensure year round crop success and a safe, clean product to the end user.

Supplemental lighting has been implemented and the amount of supplemental light has been calculated by quantifying Daily Light Integral (DLI) based on the specific geographical location of Citiva Medical's Cultivation Facility to ensure consistent illumination year round.

There are nine (9) stages of growth for medical marihuana plants and the Cultivation Facility is optimized to aid the plants at each step of their growth. The stages will be discussed in later sections:

- Cloning stage 1
- Cloning stage 2
- Vegetative stage 1
- Vegetative stage 2
- Vegetative stage 3
- Flower room 1
- Flower room 2
- Flower room 3
- Flower room 4

Each flower room is staggered two (2) weeks apart which enables us to harvest every two (2) weeks. This is essential in keeping a consistent number of employees working around the clock by effectively spreading out all major tasks (i.e. transplanting, harvests, etc.). This approach also ensures there is never a void in the facility. Each stage of growth has the exact space required for maximum use of space and time.

We have implemented rolling tables that allow us to utilize the maximum available space within each stage of growth while still meeting egress and all local code requirements.

Chiller systems have been implemented as the heating, ventilation and air conditioning (HVAC) source with many redundancies built in as fail-safes. Chiller systems operate more efficiently than traditional HVAC systems and have the ability to operate in much lower ambient temperatures without failing, e.g., 20 ^{0}F.

Automated fertigation injection systems fuel the top feed drip system which ensures the plants get exactly what they need for maximum productivity in each of the nine (9) stages of growth. Inline ozone generators increase the dissolved oxygen in the nutrient solution and remove any anaerobic bacteria which also improves productivity and crop success.

Our irrigation approach is considered a recirculating system which decreases water and nutrient consumption by as much as 70%. This not only saves water, but also minimizes water drainage from the greenhouse.

3.3 WORK FLOW DIAGRAM

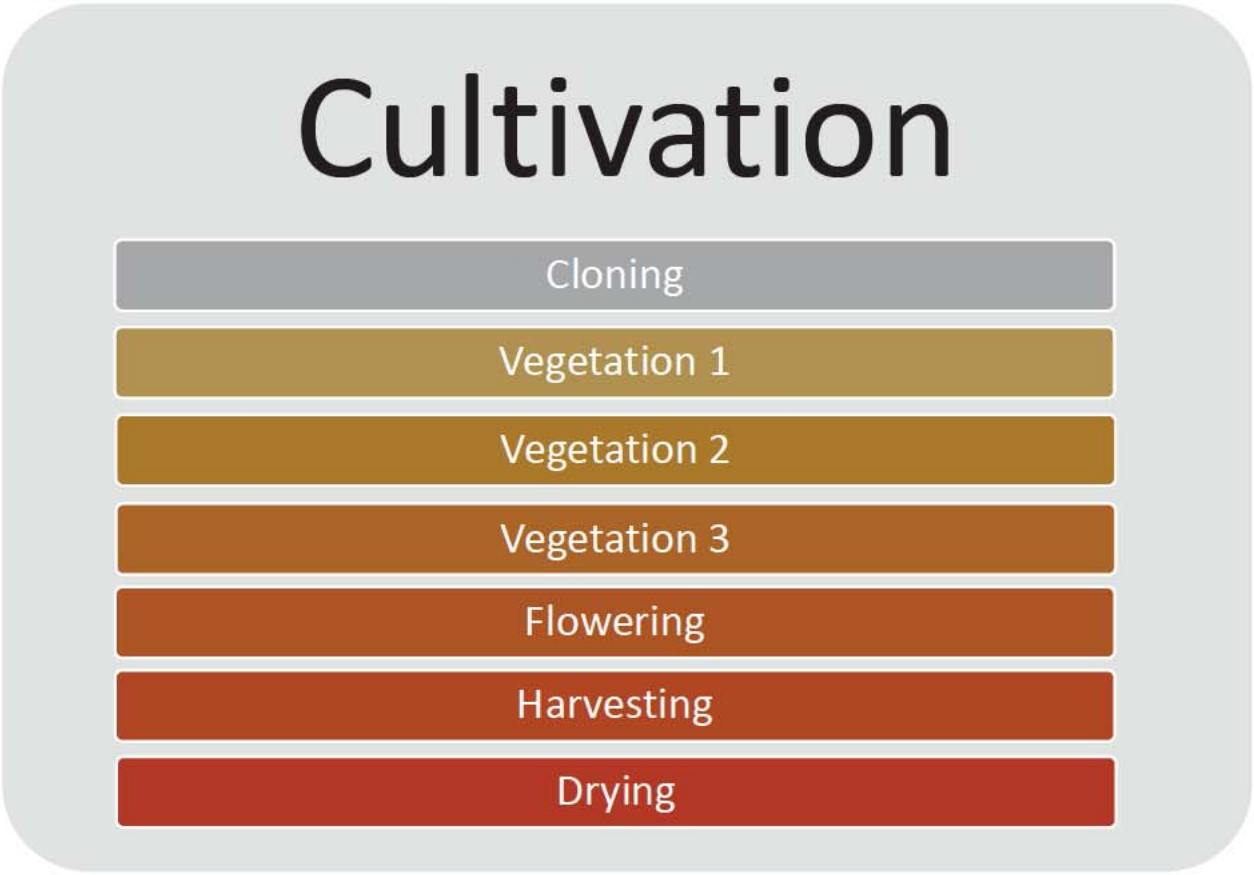

3.4 CULTIVATION FACILITY POLICIES AND PROCEDURES

3.4.1 INTRODUCTION

The Production facility will be open for operations generally between the hours of 6:30am to 7:00pm seven (7) days a week. These hours are subject to change from time to time as necessary. Citiva Medical has identified particular steps for opening and closing procedures to ensure the success of this operation. These steps have been identified as critical to the daily operation and managers will be provided with a checklist to ensure these procedures are completed each day. Failure to properly complete or execute the daily procedures may result in disciplinary action.

3.4.2 OPENING PROCEDURES

A shift leader will be designated to perform the following opening procedures each day:

1. Disarm security system
2. Turn on all common area lights to include front hallways, break-room and vegetative room.
3. Inspect outside of building for anything unusual or out of the ordinary (Entrance door ajar, unfamiliar cars parked in parking lot, any bystanders, etc.)
4. Inspect inside of building. (Check for anything out of place, check lights in veg and flower

rooms, quick inspection of plants.)

Other shift leader tasks at the beginning of a shift include:

1. Check e-mail and become informed of the previous shift's significant activities
2. Prepare daily task itinerary
3. Confirm attendance of scheduled personnel
4. Facilitate pre-shift meeting and distribute to employees the shift itinerary along with any other pertinent information

3.4.3 CLOSING PROCEDURES

A shift leader will be designated to perform the following opening procedures each day:

1. Put away all tools and equipment
2. Sweep and spot mop all floors in cultivation area (Veg/flower/dry room)
3. Ensure that all valves and spigots are closed so that no tanks are filling/draining
4. Ensure that all doors are locked (Inside doors as well as outside doors in all flower rooms and any other exits, including garage bay door)
5. Ensure that all staff has left the facility
6. Turn off all overhead lights (Veg/flower/dry rooms & hallway)
7. Set the security alarm
8. Exit the facility

3.4.4 DAILY OBSERVATIONS

Shift leaders are responsible for recording several daily plant/environmental observations. These observations will be recorded on the daily observations worksheet and entered into the computer database.

- Flower Rooms, Veg Room, Clone Roomsand Dry Room:
  - Temperature – max/min
  - Humidity

- Small and Medium Reservoirs:
  - Water temp
  - pH
  - Volume
  - PPM's

- Plants
  - Wilting, horning, discoloration, mold, pests, etc.

3.4.5 DAILY INVENTORY COUNT

All live and hanging plants will be counted by a production assistant twice daily and recorded on the

daily plant count sheet. Flower rooms will be counted and tracked by strain. The dry room count will just be total number of plants in room. Plant count sheets must contain date, time and initials of individuals performing the count.

3.4.6 PLANT FEEDING

Feeding schedules will be determined by the residual moisture content which will be checked twice per day.

Production staff will refer to the Citiva nutrient regimen for specific requirements. The nutrient regimen is subject to change at any time with or without notice. Shift leaders are responsible for obtaining the most current nutrient regimen from the Cultivation Manager prior to administering a feeding.

3.4.7 NUTRIENT REGIMEN

The nutrients used for our hydroponic cultivation of Marihuana are listed below for both the Vegetative and Flower stages. The brand names, amounts and schedule of application are not included, but are available upon request.

3.4.7.1 VEGETATIVE NUTRIENTS

1. Veg.Base A NPK: 4-0-1
2. Veg.Base B NPK: 1-2-5
3. Silica solution such as silica supplement
4. Root stimulant containing of vitamins, trace minerals and microbes
5. Calcium/Magnesium solution of calcium and magnesium nitrate
6. Carbohydrate solution comprised of simple and complex sugars
7. Enzyme solution containing cellulase to break down dead roots to prevent disease
8. Beneficial Bacteria as a root disease preventative
9. Compost Tea as a root disease preventative
10. pH down to maintain pH in the optimal range for the plants, pH 6.0 to 6.5
11. pH up to maintain pH in the optimal for the plants, pH 6.0 to 6.5

3.4.7.2 FLOWER NUTRIENTS

1. Base A NPK :2-0-3.
2. Base B NPK: 1-3-6.
3. Silica solution such as silica supplement, such as Rhino skin.
4. Root stimulant containing of vitamins, trace minerals and microbiologicals.
5. P/K booster a source of Phosphate and Potassium for the plant during late flowering .
6. Bloom enhancer 1, A p/k booster with amino acids used in early and mid flower stages.
7. Bloom enhancer 2, A p/k booster used in the latter half of flowering for ripening and yield.
8. Calcium/Magnesium solution of calcium and magnesium nitrate such as Cal/Mag.
9. Carbohydrate solution comprised of simple and complex sugars such as Carboload.
10. Enzyme solution containing cellulase to break down dead roots to prevent disease.

11. Beneficial Bacteria as a root disease preventative.
12. Compost Tea as a root disease preventative.
13. pH down to maintain pH in the optimal range for the plants, pH 6.0 to 6.5.
12. pH up to maintain pH in the optimal for the plants, pH 6.0 to 6.5.

3.4.8 Foliar Spray

Use RO water at room temperature and carefully measure/mix the appropriate nutrients provided on our nutrient foliar regiment. Keep a lot of pressure in pump sprayers to ensure a fine mist. Spray the undersides of the leaves throughout the canopy and just a fine mist on the tops of the leaves. All foliar sprays should be done with the lights off. Keep fluorescent lights on so as not to disturb the photoperiod. Turn lights back on after the plants have dried off. Plants in V1 and clones should be treated at half strength. Foliar sprays can be used throughout the vegetative stage and weeks 1-4 in flower.

3.4.9 CLONING

Coco Coir Prep: 15ml Clonex per gallon of R/O water; pH to 5.2; Soak coco coir for a minimum of 20 minutes. The tray which holds the coco coir will have slats or holes permitting water in and out.

Rooting Hormone Prep: Dip N Grow low strength factory recommendation. The bottom 1" of the clone should be soaked in the solution for 3 seconds, then immediately placed in the coco coir.

Taking Cuttings: Cut from plant with sterilized scissors; 3" tall cuttings are preferred; once removed from donor plant, slice end of cutting at 45 degree angle with a sharp razor then make 2-4 incisions along the stem of the cutting beginning 1" from the 45 degree slice. Every five (5) minutes cuttings will be sprayed with low strength Liquid Karma until clone room is placed.

Coco coir Insertion: Be sure to make a snug fit with about 3/4" of the stem planted within the coco coir. If necessary, make a hole that is a hair smaller than the diameter of the cuttings stem.

Clone Maintenance: Check the moisture level of the coco coir daily by picking the clone tray up and weighing them. Once the tray feels noticeably lighter it's time to water. Fill a clone tray reservoir with Clonex solution at 15ml per gallon 3/4" - 1". Take clone tray and place it in the clone tray reservoir for 2- 5 minutes and ensure that the coco coir has wicked the solution.

Removal from the Clone Room: Once cuttings have rooted and have 1" or more of vegetative growth cuttings will be inspected for root growth. Once removed from the clone room, cuttings will be sprayed every 15 minutes for 3+ hours with low strength Liquid Karma in order to acclimate to the lower relative humidity.

3.4.10 PRUNING

Pruning is essential to the overall health and quality of Citiva Medical's product. Production assistants should maintain discipline and attention to detail while pruning. Pruning will be conducted several times throughout the flowering cycle as directed by the shift leader.

There are two (2) different types of pruning:

- **Small branches and flower sites:** Performed at each transplant through veg stages (lightly), and in week one (1) of flower (lollipopping). By removing the small branches and lower flower sites that would manifest sub-optimal flowers we are ultimately increasing our yields and will have more consistent quality and size of flowers.
- **Fan leaf removal:** Performed in week 3 (lightly) and week 6-7 of flower. By removing fan leaves you are doing two (2) things: 1) allowing for more light penetration through the canopy so that the lower leaves/flowers get the light necessary for optimal growth, and 2) allowing more air flow through the plants, which will help prevent the start of any mold/decay.

3.4.11 TRANSPLANTING

All plants will be transplanted three (3) times during the grow cycle. Transplanting can be a repetitive and mundane task, however it is extremely important to the health of the plan that transplanting be conducted properly. Transplanting will vary slightly at each stage of growth.

3.4.12 RESERVOIR CHANGE

All reservoirs will be changed weekly. The schedule will be staggered in a manner that all reservoirs will not be changed at the same time or on the same day. The shift leader is responsible for recording all reservoir change activity on the appropriate logs.

1. Unplug and remove recirculating pump and air-stones
2. Soak air-stones in a bucket of clean water
3. Pressure wash the air stones while in the bucket to clean off any buildup
4. Rinse recirculating pumps in mop sink thoroughly, making sure all the coco and other debris gets flushed out of the pump
5. Drain reservoir using plumbed drain as well as a submersible pump
6. Clean inside the reservoir(s) using the pressure washer, making sure to clean the entire inside of the tank
7. Unplug and remove submersible pump
8. Use a wet-vac to remove leftover water and debris that the submersible pump left behind
9. Place recirculating pump and air- stones back in the reservoir
10. Close drain valve
11. Open fill valve, and plug in the pump from the corresponding holding tank and fill tank to appropriate level
12. Veg 1 – 500 gal
13. Veg 2 & 3 – 600 gal
14. FR1 & 2 – 500 gal
15. FR3 & 4 – 625 gal
16. Shut off pump and close fill valve when appropriate water level has been reached
17. Plug in the recirculating pump and air-stones
18. Empty wet-vac in the mop sink
19. Disconnect and store the pressure washer and hose
20. Coil and store the submersible pump and hose
21. Clean the top of the reservoir tank as well as the opening of the tank with a rag

22. Add nutrients according to appropriate week on the Citiva nutrient regimen
23. Check and record pH and PPM (Do not make adjustments at this point)
24. Mop the floor around the tanks/drains to remove any excess water or spilled nutrients

3.4.13 END OF CYCLE CLEANING

At the end of each flowering cycle, the flower room must be cleaned and de-contaminated prior to next use. Shift leaders are responsible for the proper cleaning and inspection of flower rooms.

1. Take all pots out to one of the dumpsters behind the flower rooms and empty the coco out of the pots
2. Once emptied, stack the pots and bring them out to the veg room where they are stored
3. Use a rag to wipe down each individual hose to remove any coco or any other debris
4. Sweep and/or vacuum thoroughly under all tables and around reservoir tanks
5. Go around to each tray and shop vacuum any coco/leaves/standing water or any other debris
6. Place all hoses in the center of the tray so that when the pump is turned on all hoses are contained within the trays
7. Remove recirculating pump and air stones from reservoir tanks
8. Place air stones in five (5) gallon bucket full of water
9. Rinse out recirculating pump in the mop sink thoroughly
10. Open drain valve and allow tanks to empty
11. Put a submersible pump in the tanks to get any water/debris that didn't drain
12. Unplug and remove submersible pump
13. Close drain valve
14. Fill tanks with 300 gal of water
15. Add one 30 gal barrel of bleach per tank to create a 10% bleach solution
16. Cycle the bleach water through each table, one (1) at a time, as if feeding
17. Allow for tables to properly drain before moving on to next table
18. Scrub trays with brushes/sponges/Scotchbrite pads to remove any residue/buildup that may be in the trays
19. Open drain valve(s) and allow both tanks to fully drain
20. Close drain valve(s)
21. Open fill valve and fill tank(s) with 300 gal H2O
22. Cycle the fresh water through each table, one at a time, as if feeding
23. Allow for tables to properly drain before moving on to next table
24. After each table has been rinsed with fresh water, open the drain valve(s) and allow tanks to fully drain
25. Repeat the process until you have successfully run three (3) cycles of fresh water rinse through all tables
26. Completely drain the tanks with a submersible pump
27. Vacuum out any standing water in the bottom of the tanks
28. Close drain valve
29. Place recirculating pump and air stones back in the tank(s) and leave unplugged
30. Coil up and store hose(s) and submersible pump
31. Mop the floor, paying special attention to any stains, around reservoir tanks, and under the tables

3.4.14 PLANT TAGGING

All plants will be fitted with a tag at the beginning of Veg Stage 1. Each tag will contain a unique code to identify the plant and also a number which represents the client for which the plant is designated.

Individual tracking numbers will be assigned by the inventory manager and maintained in conjunction with the Plant Inventory Tracking Log.

Once tracking numbers are assigned, Production Shift leaders will supervise the application of plant tags and promptly communicate any deficiencies with the Inventory Manager. The tags are standard nursery tags that attach at the base of the plant around the central stem.

Plant tags will remain intact with the plant until processing. Once the flowers/buds are removed from the plant stalk/stem, the perforated portion of the tag will be removed and affixed to the bag in which the flowers/buds will be placed.

3.4.15 MOLD DETECTION

Mold is one of the issues that should be looked for in the daily observations. Mold is most commonly found on the tops of the plants in the central cola. The mold that affects our cannabis plants is gray to white in color depending on the exact type. If there is a questionable spot in a plant, a loupe or handheld magnifier should be used to determine whether there is a problem. About one (1) week prior to harvest the largest colas should be inspected for mold, or if the environmental conditions are unfavorable (high temps, high humidity's for extended periods of time in late flower. The vegetation around the moldy area will experience discoloration. It will turn yellow/ brownish and eventually die off. Use a magnifying glass for positive I.D. if necessary. Prune off tops of plants or infected branches being careful not to spread the spores, and dispose of properly. Infected parts of plants should be contained in a plastic bag before removal to prevent mold spores dispersal.

3.5 CULTIVATION PROCESSES INTRODUCTION

3.5.1 CLEANLINESS & SAFETY

Cultivation areas should be kept clean at all times. At a minimum, standing water and trimmed leaves should be removed ASAP. Trays should be wiped down daily. Workstations should be cleaned after each use. Floors should be swept throughout the day and mopped at the end of each shift. Grow tools should be kept sterile when not in use and used in only one (1) grow area. Employees should wash hands (change gloves) frequently throughout the day, and whenever moving from one (1) grow area to another or returning from a break. All pots, clone trays, measuring cups, etc. should be cleaned, rinsed, and dried after each use. (Reusable items should always be stored clean.) Food should never be allowed in cultivation areas, and drinks should only be permitted when equipped with a spill-proof cap.

Cleaning stations with broom, dustpan, waste bin, clean towels (or shop towels) and organic cleaners should be set up in each grow area.

3.6 PROPAGATION PROTOCOLS AND PROCEDURES

Propagation is the first critical step that must be performed as carefully and meticulously as possible to ensure that the entire growing process starts with healthy, vigorous plant material. For this reason, it is important to make sure that the environment and all necessary equipment are kept as clean as possible and that the protocol is followed as carefully as possible.

It is also important to consider scheduling from the very beginning. The propagation process itself will take three (3) weeks from cutting to transplant, two (2) weeks in vegetative stage 1, two (2) weeks in vegetative stage 2, two (2) weeks in vegetative stage three (3) then are moved to 1 of 4 flower rooms for the final stage. The flower process itself will take eight (8) weeks from transplant to harvest for our selected varieties. This means that as plants go into the flower transition, new plants should be propagated right away to replace them immediately after harvest. This way, the growing area will always remain full and productive without any gaps in schedule.

When following this protocol, Citiva Medical employees should be able to achieve a near 100% success rate. This means that almost every single cutting taken will root and become a useable plant. However, plants when cloned respond slightly different to each cuttings micro-climate. As a rule, at least 50% more cuttings than needed should be taken to allow the grower to cull any that are even slightly unhealthy or slow to root. Because new clones are relatively cheap to create, this is the best opportunity to choose the healthiest plants and discard the rest.

3.7 PREPARATION

1. Soak coco coir 1.5” cubes in clone solution until saturated. (Clone solution is prepared by adjusting water to a pH value between 6.2 and 6.5);
2. Pour a small quantity of rooting hormone gel (~1Tbsp) into a small, shallow container. Many such products are widely available and are all equally effective. Gel products such as “Clonex” and “Rootech” are ready to use and typically contain 3% Indole Butyric Acid (IBA). Other products including rooting powders or liquids are also effective and should be used as directed for vegetative cuttings;
3. Fill the bottom two (2) inches of a small cup with clone solution; and
4. Assemble tools to include a clean, shallow clone tray with humidity dome, sharp shears (clean/ sterilized thoroughly with alcohol) and a clean razor blade;

3.8 PROCESS

1. Choose healthy, pest free, vigorously growing shoots from the chosen plant and take cuttings which include at least two (2) lateral meristematic nodes and a healthy terminal node, cutting them with clean, sharp shears and placing them directly into the clone solution cup, keeping the cut end wet;
2. Take each cutting from the cup one at a time and remove the leaves and shoots from the bottom-most meristematic node (or two (2)) by cutting vertically along the stem with the razor blade;
3. Next, make a clean cut at a roughly 45 degree angle through the stem just below the freshly cut node and immediately dip the fresh cut into the rooting hormone gel;

4. Allow the cutting to imbibe the rooting hormone for 15 to 30 seconds before removing it and inserting the cut end into a prepared coco coir cube, making sure that at least one (1) freshly cut meristematic node is embedded within the coco coir and at least one (1) healthy remaining node (preferably two (2) or three (3) including the growing tip) remains above the surface of the coco coir;
5. Place the now finished cutting in its coco coir cube into the clone tray and repeat the process until the tray has been filled with the intended number of cuttings;
6. Immediately cover the tray with the humidity dome.
7. Move to environmentally controlled clone room and remove humidity dome.

3.9 MAINTENANCE

The coco coir must stay evenly moist at all times and the propagation environment should be maintained between 72 and 78 degrees Fahrenheit with a relative humidity level above 70 percent for optimal results. New clones should be kept under low intensity lighting. T5 fluorescent fixtures with a mixture of 6400k and UVB lamps are ideal for this purpose and should be placed 24 inches above the clone trays.

The coco coir cubes should be watered with clone solution as needed. This can be achieved most efficiently by flooding the tray to wet all of the cubes at once and then fully draining run off solution to ensure an aerobic environment at the root zone. Cutting a drain hole in side of the tray may help to drain it effectively.

Make sure that:

1. The tray is completely drained to ensure the perfect ratio of water to air at the root zone (aerobic). The coco coir cubes should never be left in standing water; and
2. If clone tray(s) are removed from clone room, the dome on the tray is replaced to maintain high humidity.

Typically, roots will protrude visibly from the coco coir within 14 days. However, it is important to note that these results may vary depending on the conditions in the propagation environment. Fastest and healthiest results will be achieved through maintaining the most consistent environment possible with regard to temperature, humidity and light intensity. When the cuttings have roots that are visible, remove the humidity dome and begin watering with a low concentration vegetative nutrient (EC 1.2, pH 5.6-6.2) instead of clone solution to keep the new roots moist until transplant.

3.9.1 CLONE STAGES 1 AND 2

The entire cloning period lasts 21 days. Each stage lasts between seven (7)-10 days.

Clones will begin in the clone stage 1 room with the humidomes on and completely sealed for about the first week. After that the vents can begin to be slowly opened. The clones require very little care in this stage and will most likely not need to be watered. Clones should be moved into the clone stage two (2) room where they will be acclimated to the outside environment. The vents on the humidomes will slowly be opened over the course of a week and eventually removing the humidome altogether. If the clones ever show signs of stress and wilting they should be misted with a mild

nutrient solution and humidomes placed back on if necessary. The plants are very sensitive and susceptible to stresses so they need extra care and attention. The nutrient solution used for feeding in this stage is different than in clone 1 and is more concentrated, always use RO water at room temperature. Any dead leaves should be removed to prevent mold. If a clone dies remove it from the coco coir tray to prevent the spread of mold and root fungus. Water clones when they are noticeably light before the coco coir dries out.

1. Disinfect all trays, humidomes, Fiskars, razorblades and cutting surfaces with bleach, and thoroughly rinse with water
2. Soak coco coir in Clonex solution, 15 ml/ gal of RO water at room temperature, pH to 6.0. Soak for a minimum of 15-20 minutes. Poor off solution until only a slow trickle remains
3. Mix up Dip N Grow (rooting hormone) using the low strength line about a ¼" from bottom of vial. Mix up new solution after exposed to light for 2 +/- hours
4. Taking cuttings from donor plant, preferably from the lower branches, and trim them down to about 3" in height and reduce the leaf size
5. Use a razor blade to slice the stem on a 45^0 and then make 2-4 small incisions into the vascular cambium, most outer part of stem, about a ¼" in length
6. Dip bottom of stem into rooting hormone and let it soak for 6 seconds then place it in the coco coir cube. Place the lower ¾" of the stem into the coco coir cube, it helps to make a hole slightly smaller than the diameter of the stem to ensure a snug fit
7. Spray clones with a mild nutrient solution every 5 minutes or so to prevent wilting
8. Once the tray is full place the humidome on, properly label with strain, date, harvest # and flower room
9. Place under 2 T5 bulbs

3.9.2 VEGETATIVE

- ***Transplanting:*** Carefully remove clones from clone trays. Fill one (1) gallon pots ¾ full with pure premium coco coir. Tuck clone into the coco. Provide 2" of space between the top of the one (1) gallon pot and the coco surface. Make sure that the top of the coco coir cube is flush with the surface of the coco. Water with 100% run off to ensure the coco is fully saturated with the Stage 1 vegetative nutrient formula. Mist with Rhizotonic at 15mL per gallon.

- ***Nutrients and Feed Schedule*****:** Refer to Citiva nutrient regimen. Feed schedule will be determined by the residual moisture content which will be checked twice per day. When adding nutrients, always shake containers vigorously, measure carefully and accurately, double check against nutrient regimen before adding to reservoir. (Never pour nutrients back into the container. Over-pours should be stored in a separate clean container for future use.)
- ***Foliar Feedings:*** Every three (3) days; Refer to Citiva foliar regimen. All foliar feedings should be applied with the grow lights turned off. The bottoms of the fan leaves should be misted heavily and the top of the plant misted lightly. When finished spraying set a timer for 30 minutes and turn grow lights back on when the timer goes off.
- ***Pruning:*** At each transplant; Week two (2) of vegetative; Day one (1) of flowering; Week three (3) of flowering. All plants will be inspected for potential shoots and flower sights that would manifest sub-optimal flowers which would ultimately lead to lower yields and less consistent quality and size of flowers. The first pruning should be a "lollipop" only.

3.10 STAGE 1 VEGETATIVE PROTOCOL

After three (3) weeks, the clones are ready to move to Vegetative stage 1. These systems consist of a top fed drip irrigation connected to an automated fertigation injection device. At this point, the clones will be placed into 4" coco coir cubes.

Reservoirs should never be stagnant. Each one should have a small pump and at least one (1) air stone to ensure constant circulation and aeration of the nutrient solution.

3.10.1 PREPARATION

1. Thoroughly clean the vegetative system. This means that all surfaces inside the tray and reservoir are scrubbed free of any residue, all tubing has been replaced, and all pumps, fittings and airstones are removed and scrubbed clean;
2. Program the fertigation injection system according to the vegetative stage one mixing protocol;
3. Place one (1) 4" coco coir cube for each clone into pH adjusted water until saturated;
4. Prepare plant labels noting strain, transplant date and any other information for all clones to be transplanted; and
5. Gather all trays containing clones to be transplanted.

3.10.2 PROCESS

1. Place the soaked coco coir cubes into the clean veg. tray;
2. Trim excess root material from the bottom of each clone and place it directly into the hole in the coco coir cube. The square clone cube will be slightly large for the round hole in the 4" cube. Carefully press the clone into the hole without damaging the plant material.
3. Install drip irrigation lines into each coco coir cube.
4. Run the feed pump to ensure that the system will run correctly before setting it on its normal schedule. A standard protocol for watering drip irrigation is three minute intervals of 375 ml per cycle. According to transpiration rates you can water as often as twice an hour or a little as twice a day.

3.10.3 MAINTENANCE

1. Program the fertigation injection system to run our standard protocol, modified if necessary by the Cultivation Manager. Check the pump and fertigation computer daily to make sure they are running on schedule;
2. Maintain EC in the system reservoir at 1.4 to 1.5 and pH between 5.7 and 6.2. These levels should be checked and adjusted daily;
3. Inspect plants daily for pests. If pests are observed, follow the appropriate procedure based on the species of pest present;
4. After two (2) weeks, the plants should have observable new growth and a thorough spray with an organic, neem-oil-based pesticide should be done whether pests have been observed or not. All stems and leaves should be thoroughly coated on all surfaces.

After two (2) weeks under fluorescents in this stage of veg, the plants should be thriving and growing rapidly.

At this point, they are ready to be moved to the second stage of vegetative growth.

3.11 STAGE 2 VEGETATIVE PROTOCOL

At this point, the new plants have rooted into their coco coir cubes and should have significant new growth. These plants are now five (5) weeks into the process from the beginning of the propagation protocol. They will now spend two (2) weeks in this stage of vegetative growth before heading into Vegetative Stage 3.

Due to the increase in growth, the plants now require more space. Vegetative Stage two (2) provides twice the space of Vegetative Stage one (1) and will require a transplant into 20 liter coco coir disposable grow bags. Refer to replant protocol for coco coir preparation.

3.11.1 PREPARATION

1. Thoroughly clean the veg system with 10 % chlorine bleach solution. This means that all surfaces inside the tray and reservoir are scrubbed free of any residue, all tubing has been replaced, and all pumps, fittings and airstones are removed and scrubbed clean;
2. Program fertigation injection system in accordance with Vegetative Stage two (2) regimen, as presented in the sub-section above.
3. Carefully inspect each plant and root zone for pests. If pests are observed, treat according to the appropriate pest control protocol.

3.11.2 PROCESS

1. Move all plants from Vegetative stage one (1) into vegetative stage two (2) and begin transplanting into 20L coco coir disposable grow bags. Refer to replant protocol for coco coir preparation.
2. Insert all drip lines to coco coir grow bags and run system manually to ensure that the system will run correctly before setting it on its normal schedule of our standard protocol, modified if necessary by the Cultivation Manager;
3. At this point, treat plants again with a thorough spray of an organic, neem-oil-based pesticide. Coat all leaf and stem surfaces to ensure the plants begin this stage pest free.

3.11.3 MAINTENANCE

1. Program fertigation injection system to feed according to our standard protocol, modified if necessary by the Cultivation Manager. Check the pump and fertigation computer daily to make sure they are running on schedule;
2. Maintain Electrical Conductivity in the system reservoir at 1.5 to 1.6 and pH between 5.7 and 6.2. These levels should be checked and adjusted daily;
3. Inspect plants daily for pests. If pests are observed, follow the appropriate protocol based on the species of pest present;
4. Lamps should be maintained at a distance of 18 to 24 inches above the tops of the plants; and

5. The plants should be pruned weekly to maintain an even canopy and remove lower growth that does not receive direct light.

After two (2) weeks in vegetative stage two (2), the plants should be quite large and vigorous. The roots will have filled the coco coir bags to 1/3 capacity.

3.12 STAGE 3 VEGETATIVE PROTOCOL

At this point, the new plants have rooted into their coco coir bags and should have significant new growth. These plants are now seven (7) weeks into the process from the beginning of the propagation protocol. They will now spend two (2) weeks in vegetative stage three (3) prior to going into one (1) of the four (4) flower rooms.

Due to the increase in growth, the plants now require more space. Vegetative stage three (3) provides twice the space of Vegetative stage 2.

3.12.1 PREPARATION

1. Thoroughly clean the veg system. This means that all surfaces inside the tray and reservoir are scrubbed free of any residue, all tubing has been replaced, and all pumps, fittings and airstones are removed and scrubbed clean;
2. Program fertigation injection system in accordance with Vegetative stage 3 regimen.; and
3. Carefully inspect each plant and root zone for pests. If pests are observed, treat according to the appropriate pest control protocol.

3.12.2 PROCESS

1. Move all plants from Vegetative stage two (2) into vegetative stage stage (3);
2. Insert all drip lines to coco coir grow bags and run system manually to ensure that the system will run correctly before setting it on its normal schedule of our standard protocol, modified if necessary by the Cultivation Manager; and
3. At this point, treat plants again with a thorough spray of an organic, need based pesticide. Coat all leaf and stem surfaces to ensure the plants begin this stage pest free.

3.12.3 MAINTENANCE

1. Program fertigation injection system to feed according to our standard protocol, modified if necessary by the Cultivation Manager. Check the pump and fertigation computer daily to make sure they are running on schedule;
2. Maintain EC in the system reservoir at 1.8 to 2.1 and pH between 5.7 and 6.2. These levels should be checked and adjusted daily;
3. Inspect plants daily for pests. If pests are observed, follow the appropriate protocol based on the species of pest present; and
4. The plants should be pruned weekly to maintain an even canopy and remove lower growth that does not receive direct light.

After two (2) weeks in vegetative stage three (3), the plants should significantly larger and in an even more rapid state of growth. The roots will have filled the coco coir bags to 3/4 capacity.

3.13 FLOWER SYSTEM PROTOCOLS

During flowering phase tall, leafy plants will stretch and begin to produce resinous flowers. The plants must be cared for meticulously from this point until harvest.

Once again, scheduling is a critical factor to consider at the beginning of this stage. Our plants have spent 21 days in propagation trays, 14 days in Veg 1, 14 days in Veg 2 and 14 days in Veg 3 in order to be ready for this transition. This gives us a total of 9 weeks, or 63 days to generate a batch of plant material that is ready to flower. Because the flower process will take eight (8) weeks (56 days) to complete, one should always start a new batch, beginning at the "Propagation Protocol" one (1) week before starting this Flower Protocol. This way, new plants will be ready to replace the current ones precisely when they are harvested. (Note: It may take a day or two (2) to clean hydroponic systems and move plants within the Greenhouse or Indoor Cultivation Facilities. Thus, some of these time periods may vary slightly. It is important to complete these transitions as quickly as possible to ensure that growing space never sits empty for more than a day or two (2) and that a system consistent schedule is maintained.)

Each table within each of the four (4) flower rooms measure 5' X 19' containing 24 plants each. There are 72 tables in each of the four (4) flower rooms, 72 tables in Veg 3, 44 tables in Veg 2 and 22 tables in Veg 1 for a total of 426 tables containing 11,970 plants (excluding clones). Each plant once in there corresponding flower room will have four (4) square feet of canopy. Determining actual planting density is a subjective process left up to the Cultivation Manager. Different strains and different growing environments may cause the ideal planting density vary. The critical element is ensuring that a dense canopy of plant material ultimately covers all table space.

3.13.1 REPLANT PROTOCOL: (FIRST DAY OF SCHEDULE)

1. Place the grow bags at the correct estimated density in roughly their final positions;
2. Place one sprayer stake in each bag and position it such that the spray will wet as much of the compressed coco medium as possible. Connect any extra sprayers in the "off" position;
3. Partially fill the reservoir with 50 gallons of water and adjust the pH to between 6.0 and 6.2;
4. Run the irrigation pump for 90 seconds;
5. As the sprayers water, check each one, making sure that it is wetting the surface of the coco block. Reposition sprayers as necessary to ensure even wetting of each coco block;
6. Repeat steps four (4) and five (5) until all bags are filled with expanded coco coir;
7. Break up the coco in each bag with your hands by squeezing it from the outside and re-apply the watering stake so that it will wet the surface of the medium;
8. Run the pump for one (1) last 60-second application of pH adjusted water before moving plants;
9. Remove the plastic wrapper from each coco coir cube and inspect the root zones thoroughly for pests or disease and apply the appropriate pesticide protocols if necessary;
10. Inspect the foliage and stems of the plant for any other pests that may be present and apply appropriate pesticide protocols if necessary;

11. Move each plant to the flower space and plant its cube into one (1) of the prepared coco bags. It may be necessary to remove some of the coco coir in order to accomplish this task. When finished, the surface of the coco coir cube should sit flush with the surface of the coco in the bag;
12. Reset the sprayer stake in the coco so that it will wet as much surface area as possible;
13. Program fertigation injection system according to specifications;
14. Run the pump for one (1) minute and check that all sprayers are thoroughly wetting the surface of their bag. Some of the sprayers may need to be replaced or adjusted at this time;
15. Set the timer to run the pump for our standard protocol, modified if necessary by the Cultivation Manager. Remember to set the timer to "auto" after setting the watering times; and
16. Begin following the Daily Maintenance Protocol every day and completing each work protocol as it appears on the schedule.

3.13.2 FLUSH PROTOCOL (ONE (1) WEEK BEFORE HARVEST)

The flush is a necessary final step for production in any type of hydroponic medium. It is the process of removing the built-up nutrient salts in the growing medium, allowing the plants to metabolize the remaining salts in their tissues. This brings the levels of phosphorous and potassium to a minimum. Making sure the plants are flushed thoroughly is critical to producing high quality marihuana.

1. All pest control procedures should be complete by the first day of flush. Make sure that the Final Pest Assessment Protocol has been completed the Friday before this protocol and that any final pest control protocols are completed before the flush begins on Monday;
2. Empty the reservoir by running the irrigation pump briefly or pumping the existing nutrients into another reservoir;
3. Refill the reservoir with fresh water and adjust the pH to between 6.0 and 6.5;
4. Run the irrigation pump and check and adjust each sprayer for maximum application just as in the Daily Maintenance Protocol. The sprayers should run for a period of 60 to 90 seconds while you do this;
5. Check the EC value of the runoff for each table;
6. Repeat steps 4 and 5 until the EC value of the runoff for all tables falls below 1.4. It may be necessary to water certain tables by hand to bring all tables to an equally low EC value; and
7. Continue maintaining the system normally until harvest, keeping the reservoir topped up with fresh water adjusted to a pH of 6.0 to 6.5, and checking that all pots are being watered thoroughly every day. Continue recording runoff values as well, (which should continue to fall from 1.4) and following the Daily Maintenance Protocol.

3.14 PRODUCTION ROUTINE MAINTENANCE

3.14.1 BULB CHANGES/DISPOSAL

Bulb changes should be performed every six (6) months. Latex gloves should be worn while handling the new bulbs to avoid getting any oils from your fingers/hands on the glass. When you replace a bulb make sure to mark the box that you put the old bulb into with a date so that the bulb

doesn't mistakenly get used again. Dispose of any old bulbs in accordance with your town's disposal procedures.

3.14.2 MAXX FANS

It is essential that the Maxx fans are in good working condition to ensure proper airflow in the rooms and to keep the lights at optimal temperature. A daily visual check is recommended. If a Maxx fan isn't functioning properly it can easily be taken down to be inspected. The blades of the fan should move freely with slight pressure. If there is any significant resistance there is likely a malfunction and a new Maxx fan would need to be installed.

3.14.3 BALLASTS

Ballasts require very little maintenance. Every cycle the electrical wires and plugs should be inspected to ensure that everything is plugged in and functioning properly. If a ballast is making any buzzing or humming noises it may be malfunctioning and should be attended to as soon as possible. Unplug the ballast and do a thorough inspection of the unit. Try troubleshooting by swapping out any electrical cords or have a licensed electrician inspect the unit.

3.14.4 CLONE ROOMS

Temperature and humidity in the clone rooms needs to be closely monitored and recorded. Temperatures will vary but should be between 70-85 degrees, and humidity should be above 60%. In between cycles the Uline racks need to be taken out of the rooms and the floors need to be swept/mopped. The walls need to be sprayed and wiped down with either a 10% bleach solution or cleaning vinegar.

3.14.5 VEG AREA

Veg reservoir tanks are changed weekly. The tanks are drained, cleaned and refilled with fresh water and nutrients. Veg area needs to be swept and spot mopped daily. All trays in Veg get vacuumed and cleaned in between cycles with a 10% bleach solution flush. Temperatures and humidity levels must be monitored and recorded daily. If temperatures are not within the acceptable range you must check the control panel to see if there are any alarms. Calling an HVAC technician may be necessary.

3.14.6 FLOWER ROOMS

Flower room reservoir changes take place weekly. All floors are to be swept and spot mopped daily, provided that activities in the room took place that warranted cleaning (pruning, nutrient spills, overflows, etc.). Temperatures must be recorded and monitored daily. If temperatures are not within the acceptable range you must check the control panel to see if there are any alarms. Calling an HVAC technician may be necessary. Bulbs must be changed out every two (2) cycles or every six (6) months because as time goes on they draw the same amount of power but output less lumens.

3.14.7 DRYING ROOM

When the dry room is occupied it is essential to check the temperature daily. Refer to Drying Procedure for details on temperature and humidity settings. After a dry room takedown, when the room is completely empty, the room gets a thorough cleaning. This consists of spraying all of the walls and wiping down the cables with either a 10% bleach solution or cleaning vinegar, and sweeping/mopping the floor.

3.14.8 RESERVOIRS

Each reservoir gets changed weekly. This includes draining, cleaning, refilling and adding nutrients to the tanks. At the end of every harvest each reservoir gets flushed with 10% bleach solution to sterilize and kill any residual bacteria.

The Ecolab blue lights will be employed in the head house to attract and destroy any flying insects that may enter through the front door despite the Biosecurity precaution.

The air ducts filters will use Merve8 filters capable of effectively blocking out fungal spores and pollen.

4 BIOSECURITY PLAN

4.1 DESCRIPTION AND APPROACH TO BIOSECURITY

At Citiva Medical we believe that the road to a safe, pure and consistent, approved medical marihuana product begins with consistently grown healthy plants. The key to a consistently healthy crop can only be accomplished by Controlled Environment Agriculture (CEA). CEA encompasses all phases of growth and provides 100% environmentally-controlled conditions for plant growth through flowering and harvest. The Cultivation Facility's internal environment is set within specific tolerances and monitored with very tight controls to ensure consistent regulated environmental conditions optimized for plant health. Citiva Medical will start its cultivation in an Indoor Cultivation Facility, while its Greenhouse Cultivation Facility is under construction. Both Cultivation Facilities will be Close Environment Agriculture facilities using the latest capabilities in Biosecurity to ensure crop health. They are both specifically designed to meet the needs of medical marihuana cultivation. An integral part of the design and operation of the Cultivation Facilities is Biosecurity. Crop Biosecurity is defined as a set of preventive measures to reduce risk to the crop from insects and microorganisms (fungi, bacteria and viruses). An overall goal of the approach is to reduce the incidence of Cultivation Facility pests and disease to an absolute minimum. Included in the Biosecurity measures is an Integrated Pest Management (IPM) approach An integrated pest management (IPM) strategy consistent with the USDA National Organic Program (NOP) guidelines will be used in this project to prevent and control plant pests and pathogens. When it is necessary to deal with disease and pests in the Cultivation Facilities, our approach is based solely on control agents certified by OMRI (Organic Materials Review Institute) and the State of New York. As a registered organization (RO), Citiva Medical will identify pesticides, fungicides and herbicides we wish to use, if needed, and obtain New York State approval prior to use. Only State-certified applicators will be used or contracted to apply the OMRI-certified agents, if necessary. We base our

approach on our Five (5) Principles for Biosecurity. Our Five (5) Principles for Biosecurity in our Cultivation Facilities are described in detail below.

4.1.1 FIRST PRINCIPLE – PREVENTION

The First Principle of our Biosecurity Plan focuses on prevention measures. Biosecurity is built into our "state of the art" Greenhouse/Head house structure of the Greenhouse Cultivation Facility and structures related to the Indoor Cultivation Facility (with adjustments due to indoor conditions).

a. The Greenhouse Facility design is made of glass to allow partial spectrum ultraviolet (UV) light into the greenhouse to continually disinfect plants and all interior surfaces. This is closest to the natural spectrum that plants receive from the Sun and provides the most efficient starting point for healthy plants. This is superior to plastic covered greenhouses which block out UV. Indoor facilities are lacking this important part of the solar spectrum, so we will augment the Biosecurity Plan to accommodate this difference).
b. The Greenhouse Facility has a standard clean room air shower entrance which actively removes particles, dust, spores, pollens and various contaminants from the cultivation garments of the workers upon entrance to the growing area.
c. The Greenhouse Facility and the Indoor Facility environments are tightly controlled to minimize the population of pests and disease organisms.
    i. Humidity is maintained in the 40%-50% range to inhibit fungal and bacterial growth on surfaces.
    ii. Temperature is maintained at +/- 2 degrees Fahrenheit. The stable temperature is held to minimize the temperatures that foster growth of microorganisms. Swings in temperature cause inconsistent plant growth and will be eliminated with this control.
    iii. Advanced climate control system is implemented with a positive pressure system, rather than the typical negative pressure system found in almost all existing greenhouses and cultivation facilities. This means that there is a slight positive air pressure that flows outward from the Greenhouse Facility's doors.
        1. The positive pressure creates a barrier to insect entrance because of outward air flow thru the door upon entrance and any imperfect seals in the structure.
        2. Positive pressure air delivery allows a more uniform temperature across the floor of the green house minimizing cold damp zones that are conducive to the growth fungi. The high temperature uniformity of each growing area in this structure enables a more uniform crop growth which is important for consistent and effective product.

d. The Greenhouse Facility uses a unique patented Ventilated Latent Heat Converter (VLHC) from Agam LLC. This system not only solves humidity related problems, but has been estimated by the manufacturer to reduce airborne viable microbial spore levels by 80%. It was chosen for this added measure of Biosecurity.
e. The Greenhouse Facility HVAC system has been specially outfitted with Merv 8 filters capable of capturing particles down the 3-10nm. This will scrub the air of mites and mold spores, as well as pollen will be used in the air recirculation system.
f. The Greenhouse and Indoor Cultivation Facilities floors will be painted white to assure that minor spills of growth media and green patches of algae do not go unnoticed and are cleaned up promptly. It will also foster a higher level of facility hygiene.

4.1.2 SECOND PRINCIPLE – FACILITY HYGIENE

The Second Principle of our Biosecurity Plan focuses on facility hygiene procedures, as well as personal worker hygiene. Facility Hygiene includes sanitation of propagation surfaces, disinfectant footbaths at the exit from the changing room and the greenhouse entrances, use of insect screening at air intake, appropriate plant spacing, careful plant pruning practices to prevent injury and wounds to the plants, as well as prompt disposal of plant litter material. Sanitation is achieved through hydrogen peroxide-based methods, as it has been demonstrated by university research to be generally as effective, but less damaging to surfaces than chlorine bleach. OMRI Certified Hydrogen Peroxide Solution formulations obtained from BioSafe Systems LLC will be used for disinfection of surfaces and footware. Upon entrance to the Cultivation Facilities, workers will change into greenhouse clothing which will consist of hospital scrubs, hair covers, blue nitryl hypo-allergenic gloves and dedicated greenhouse shoes. All these elements will be provided by Citiva Medical. Citiva Medical will also be responsible for washing the uniforms, hair covers, shoes and supplying disposable blue nitryl gloves to minimize the possibility of microbial contamination.

4.1.3 THIRD PRINCIPLE – ACTIVE OBSERVATION AND SCOUTING

The Third Principle of our Biosecurity Plan is an aggressive observing and scouting by all members of the Cultivation Team who are regularly on the greenhouse/indoor cultivation floor. They will be trained to recognize and report pests, fungal and microbial diseases, as well as to identify plants stressed by nutrient and environmental conditions. Evidence of pest and disease stress can be confused with nutrient stress. So, the workers will be fully training in Biosecurity and in how to assess plan health. In addition, blue and yellow sticky traps will be used to trap and monitor the flying insect population such as adult white flies, fungus gnats and thrips. The cultivation team will use Cornell University's Greenhouse ScoutTM mobile app software for identifying and reporting pests and diseases. This software provides the grower with a readily accessible source of general information on biocontrol of common greenhouse insects. It provides an interactive interface for collecting scouting data and recording product application and recordkeeping with a graphical presentation of scouting data. Electronic reporting is preferred over reporting on paper. The results will be implemented into the Citiva Medical recordkeeping system to create a permanent record.

4.1.4 FOURTH PRINCIPLE – INTEGRATED PEST MANAGEMENT (IPM)

The Fourth Principle of the Biosecurity Plan is the Integrated Pest Management (IPM) system. The IPM will include the release of beneficial organisms that will be used whenever possible to minimize insect pest populations. Beneficial insects will be purchased from reliable sources such as IPM Laboratories located 50 miles away from the Cultivation Facilities in Locke New York. An IPM consultant will be hired to assure the optimal effectiveness of this approach. Beneficial organisms used for controlling insect pests include predators, parasites, as well as bacteria and fungi. There are dozens of possible pests and diseases that are effectively addressed with IPM, obviating the need for chemical approaches. Examples of how beneficial insects can be used in control are given below.

a. Whiteflies can be controlled using parasitic wasps such as Parasite/Predator *Eretmocerus eremicus* or by fungi such as *Beauvaria bassiana.*

b. Aphids will be controlled by lady beetles, Coccinellidae and lacewings, *Chrysoperla rufilabris.*
c. Spider Mites will be prevented by the predatory mite *N. californicus* can survive a long time in the absence of prey. These have proven highly effective in a greenhouse environment. Lady Beetles serve as an addition means of control.
d. Thrips can be controlled by the predatory mite *Amblyseius cucumeris and* the fungus *Verticilllium lecanii* which is a specific insect parasite.
e. Fungus gnats can be treated with the bacterium *Bacillus thuringiensis* subspecies *israelensis* and the nematode Steinernema *feltiae.*
f. Powdery Mildew can be treated with Serenade TM the active ingredient in Serenade is a bacterium, *Bacillus subtilis,* helps prevent the powdery mildew from infecting the plant.
g. Gray Mold, *Botrytis cinerea,* can also be treated with Serenade.
h. Root Rot caused by fungi such as *Phytophthora and Pythium* can be controlled by agents such as the mycoparasite, *Gliocladium virens*.

4.1.5 FIFTH PRINCIPLE – USE OF NOP AND OMRI-CERTIFIED SUBSTANCES

The Fifth Principle of the Biosecurity Plan calls for the judicious use of substances allowable in the US National Organic Program (NOP) and that are OMRI-certified for extreme cases plant health crisis. These materials will be used only in an "as-needed" basis, and will use only substances allowed by the National Organic Program (NOP) guidelines. Citiva Medical will limit its selection of pesticides to those certified by OMRI and previously approved by the State of New York. Citiva Medical will employ, as a member of the Cultivation Team, a New York certified pesticide applicator. This individual will be responsible for the application of all control agents, as well as the purchase orders of sprayers, foggers and clothing needed for their job. If a single plant shows signs of infection or infestation it will be trimmed of damaged material or removed from the Cultivation Facility entirely and disposed of in the same manner as the rest of the unused plant material, according to the New York regulations and laws. In the ideal, we will use no pesticides what-so-ever. We believe that routine use of Principles 1 through and 4 will be sufficient to control pest populations adequately. However, should the need arise, agents such as hydrogen peroxide, sulfur, hydrated lime and sodium and potassium bicarbonate may be used for insect and disease management. OMRI-approved botanical inputs include substances derived from plants including cold pressed neem oil, pyrethrum (from chrysanthemums) and essential oils. Citiva Medical does not plan to routinely use pesticides. In the event of an intractable disease or pest, prior to a crop emergency, there may instances in which an OMRI-certified agent will be used to aid the health of the crop.

4.2 PEST ASSESSMENT PROTOCOL

Throughout the life cycle of the plants, workers shall conduct Pest Assessments regularly. The schedule will be determined by the Cultivation Manager. The Pest Assessment shall consist of the following procedure, in compliance with 1004.11(e)(5,6):

1. Worker uses a 30x magnifying loop to carefully inspect each plant thoroughly.
2. Inspect and Assess each plant for:
    a. Mold

b. Mildew
c. Insects
d. Pests of any sort
e. Rot
f. Evidence of rot
g. Evidence of gray mold
h. Evidence of gray plant material
i. Evidence of black plant material
j. Evidence of insect damage
k. Evidence of insects

3. Any plants found unsatisfactory, with evidence of any of the above items in the list, will be carefully culled and removed.
4. Such material shall be moved to a separate secure area for temporary storage of any medical marihuana or medical marihuana product that needs to be destroyed.
5. Such unsatisfactory plants will be dealt with as waste material according the New York laws and regulations.

4.3 EXAMPLE DISEASE AND PEST CONTROL PROTOCOLS

If disease or pest control problems occur that cannot be addressed within the first four Biosecurity Principles, Citiva Medical, will take conservative, but necessary, steps to ensure crop health through the judicious, careful and regulated use of approved OMRI-certified agents. In these severe instances, we plan to use an OMRI-certified agent to control the problem and aid the health of the crop. Here we present typical examples of each class of control agent we may use, in such a situation. It should be noted that each shift will have at least one (1) in-house State-certified commercial-grade pesticide applicator on duty, as the application of some of these agents will require a certified applicator.

Rodent control and elimination will be contracted to a local municipality company, should the need arise.

4.3.1 DISINFECTION OF SURFACES BY SANIDATE (OMRI)

1. Always follow manufactures application and safety instructions.
2. Dilute product by 1 to 100 for routine use as a daily surface disinfectant.
3. Apply with clean cloth and let dry.
4. The product decomposes to harmless water vapor within moments of application there is no need to rinse off.

4.3.2 PYGANIC DRENCH PROTOCOL (OMRI)

1. Fill a 5-gallon bucket with nutrients from the reservoir of the scheduled or affected system. (Note: make sure that the nutrients have correct pH between 6.0 and 6.5);
2. Add 75mL of Pyganic EC 5.0 II to the entire bucket;
3. Stir the bucket thoroughly until the Pyganic is evenly dissolved; and

4. Apply roughly one (1) Liter of solution to each pot of growing medium, making sure to completely wet the top surface before moving to the next pot. Each five-(5)-gallon bucket should treat 24 plants.

4.3.3 PYGANIC SPRAY PROTOCOL (OMRI)

1. Fill a sprayer or atomizer with clean water;
2. Adjust the pH of the water so that it is between 6.0 and 6.5;
3. Add 15 mL of Pyganic EC 5.0 II per gallon of water; and
4. Stir thoroughly until the Pyganic is evenly dissolved in the water;

4.3.4 AZATROL (AZADIRACHTIN) PROTOCOL (OMRI)

1. Fill a sprayer or atomizer with clean water;
2. Apply Azatrol to the tank at a rate of 45mL per gallon of water;
3. Add three (3) drops of ordinary dish soap;
4. Stir the tank thoroughly until the Azatrol evenly dispersed; and
5. Apply the spray or fog to all scheduled or affected plants thoroughly. Be sure to coat all leaf surfaces on top and bottom as well as stems. Everything above the growing medium should be wet.

5 HARVESTING

5.1 HARVEST PROCESS OVERVIEW

1. Perform Final Pest Assessment Protocol for insect damage, insects and mold
2. Cut plants out of trellis netting starting with the bottom layer
3. Cut plant at base of stem and make sure plant tag is still attached to the stem
4. Hang plants on rack and transport to dry room
5. Weigh and record wet weight on data sheet
6. Cut top of plant out and remove some of trellis netting
7. Hang both sections of the plant next to each other on line. Keep equal number of plants on each line and keep them organized to allow for easy counting
8. Collect all lose buds that fall on ground or in trays and dry them in the hanging nets

** If mold is found on a plant during the harvesting and drying process the entire plant should be weighed and properly handled according to New York State laws and regulations

5.2 FINAL PEST ASSESSMENT PROTOCOL

Before harvest, the Final Pest Assessment shall consist of the follow procedure, in compliance with 1004.11(e)(5,6):

1. Worker uses a 30x magnifying loop to carefully inspect each plant thoroughly.
2. Inspect and Assess each plant for:
    a. Mold

b. Mildew
c. Insects
d. Pests of any sort
e. Rot
f. Evidence of rot
g. Evidence of gray mold
h. Evidence of gray plant material
i. Evidence of black plant material
j. Evidence of insect damage
k. Evidence of insects

3. Any plants found unsatisfactory, with evidence of any of the above items in the list, will be carefully culled and removed.
4. Such material shall be moved to a separate secure area for temporary storage of any medical marihuana or medical marihuana product that needs to be destroyed.
5. Such unsatisfactory plants will be dealt with as waste material according the New York laws and regulations.

5.3 HARVEST DETAILED PROCEDURES

5.3.1 INITIAL STEPS

1. Set the irrigation timer to "off" by pressing the "auto/on/off" button twice. This ensures that the irrigation pump will not run during the harvest process;
2. Cut each plant at the base, just above the growing medium using heavy shears. Quickly remove the largest leaves and hang the plant on the scale to determine its total wet weight;
3. Record the weight and strain both in the harvest notes and on the plant's individual tag. Numbering the plants in the order that they are harvested and noting the strain and weight in two places allows for easy double-checking of weights and strain stats;
4. Hang each plant by its base in the dry/cure chamber at room temperature and a relative humidity of 40%. A fan should provide gentle airflow within the chamber at all times while plants are drying;
5. Plants should be checked for moisture content daily after the first 48 hours. When the plants' stems begin to crunch or snap when bent, each plant should be cut down and processed into small individual branches so that it can be placed entirely in a large brown paper bag. Make sure to include the plant's tag so that it can continue to be tracked; and
6. Trim the plants as soon as possible and place the finished product in sealable, airtight containers. Any paper bags that must sit longer than three (3) days after being filled should be placed together in large plastic trash bags to prevent over-drying.

5.3.2 SYSTEM PREPARATION PROTOCOL: (DAY AFTER HARVEST)

1. Empty and clean the reservoir. For large reservoirs, it may be necessary to climb inside to clean them thoroughly. Make sure all surfaces are clean and check both pumps for residue and signs of wear;
2. When everything inside the reservoir is clean, add 10 to 15 gallons of water to the reservoir and adjust the pH to 4.5 while allowing the circulating pump to run;

3. Run the irrigation pump, flushing the irrigation tubing and sprayers with the low-pH solution;
4. After the irrigation equipment has been flushed, thoroughly clean all tables. This includes all table surfaces, gutters and drains. When finished, empty all drain buckets; and
5. Once per year, replace the reflectors within the 1000w dual ended HPS lamps to ensure maximum reflectivity of light source.

5.3.3 DRYING STAGE

The temperature in the dry room should be set to 75^0F and the humidity set to 45%. Once the humidity drops and holds below 50% the temperature should be dropped to 68^0F and the humidity set to 50%. The dry room needs to be monitored daily and adjusted as needed. The lights should be kept off when no one is in the room. Prior to hanging any medicine in the room, the entire room needs to be disinfected with a diluted bleach or vinegar solution. This includes the walls, lines, beams and floor.

5.3.4 CULLING/DISPOSAL

All vegetative plant matter (not containing flower sites) will be handled according the New York State laws and regulations for appropriate, regulated disposal. This includes fan leaves and plants culled from the veg. room. No weights are necessary. Remove plant and I.D. number from inventory list with reason why it was culled or disposed of, dated and initialed.

All plant matter containing flower sites needs to be discarded in accordance with the waste disposal guidelines in New York State law and regulations.

5.3.5 ROUGH TRIM

1. Weigh and record dry plant weight on data sheet
2. Cut branches off of main stem
3. Remove all leaves that contain no medicinal value using your fingers
4. Break or trim buds off of stems and place into “turkey roasting bag” one (1) plant at a time
5. Seal “turkey bag” and make sure plant I.D. tag is attached
6. Weigh and properly dispose of all leaves, stems and trimmings/ waste according to New York State laws and regulations

Goal is to keep all dried dead leaves out of bags and curing process

6 AIR MITIGATION PLAN

6.1 BEST MANAGEMENT PRACTICES FOR COMMERCIAL MEDICAL MARIHUANA CULTIVATION FACILITIES

The emerging medical cannabis cultivation industry has many opportunities to enhance its public image and protect the environment by incorporating best management practices to reduce or eliminate odors and other adverse environmental impacts from operations.

Citiva Medical plans on employing key protocols to mitigate and largely do away with any potential problems with air quality and/or contamination. Among them are carbon filtration systems and potentially the use of negative ion generators well as commercially-available Merv 8 positive pressure filtration devices that effectively remove all airborne pathogens.

6.2 VENTILATION AND ODOR CONTROL

The odor from marihuana cultivation operations is potentially a nuisance and can easily migrate in and around the marihuana cultivation site. Citiva Medical will employ ventilation and odor control that is adequate for the size of its proposed operation. Citiva Medical has designed its cultivation modules so that ventilation system takes into consideration the square footage and number of plants per module. A properly sized, installed and maintained ventilation system resolves two (2) issues. First, having the cultivation modules properly sealed will inhibit odors from escaping. Secondly, the addition of a dehumidifying system to control mold and pathogens will be installed. Relative humidity in the grow modules will by carefully monitored and controlled so that potential growth of molds is minimal.

Citiva Medical will employ a primary odor control technology that has been proven effective in controlling odors from cultivation sites and is also exploring the use of a secondary technique, negative ion generation.

1. **ACTIVATED CARBON FILTRATION** – This technique involves forcing the air circulating within the HVAC system through an activated carbon filter in order to filter out odors and pathogens that may pose a public health risk. This method is highly effective and can be used in combination with other technologies such as an electrostatic precipitator. Carbon filtration is the least energy intensive of the three technologies. In most cases, the energy required to run the filtration system is already accounted for in the air handling and exchange system. The excess energy necessary to force air through the filter is negligible and, depending on the size of the discharge and intake, often only slightly alters the speed of the exchange. The use and disposal of the filters creates the most physical waste; however, the carbon can typically be regenerated for reuse.
2. **NEGATIVE ION GENERATION** – These machines, sometimes called electrostatic precipitators, will use a negative charge to attract positively charged particles in the air. The charged particles are attracted to the metal filters, which over time, will become concentrated with particles and require cleaning with water on a regular basis. The negative ion generators can improve indoor air quality to a greater degree than some of the other technologies. The environmental impact of this technology is also dependent upon size and use. They are typically powered by a single wall outlet and can run 24 hours a day, seven (7) days a week. They will also need to be cleaned which usually requires removing the metal panel and washing it to remove the particles. Otherwise, they require very little maintenance and their energy consumption is typically negligible and lower than many fans.

Citiva Medical's preventative maintenance and replacement plan will be established for these systems to ensure optimum operation and continuous odor control.

7 PROCESSING

7.1 INTRODUCTION

Citiva Medical is committed to preparing quality-assured, third-party-tested, accurately-labeled brands and forms of approved medical marihuana products for its certified patients. The Citiva Medical Processing Facility will be adjacent to the Cultivation Facility in Romulus, New York. The Facility will be built and operated on land that was once a US Army Depot. Infrastructure to support the Facility exists now and construction will begin as soon as Citiva Medical is awarded the Registered Organization (RO) designation by the State of New York. Already using Good Agriculture Practices and Good Handling Practices (GAP/GHP) in it Cultivation Facility, Citiva Medical will also implement Current Good Manufacturing Practices (CGMP), throughout its Processing Facility.

7.2 PHYSICAL ATTRIBUTES

The Citiva Medical Processing Facility will house processing and extraction capabilities, as well as quality control testing in facilities/areas featuring clean room attributes to ensure safe, consistent and accurate medical marihuana products. In our state-of-the-art Processing Facility, we will prepare final approved medical marihuana products, such as tinctures, vaporization oils, and capsules in accordance with New York laws and regulations.

7.3 EXPERTISE

The Citiva Medical team is experienced in the regulated medical marihuana environment. We have principals and staff that have direct, hands-on experience in other states with medical marihuana facilities, such as Rhode Island, Maine, Colorado and Nevada. In addition, Citiva Medical's principals and staff have more than 40 years combined experience operating USDA and FDA compliant manufacturing facilities. We believe the combination of marihuana and USDA/FDA manufacturing experience is a winning combination for success. Citiva Medical has the expertise today to implement a successful enterprise in New York.

7.4 PROCESSING METHODOLOGY

"Manufacturing" shall include, but not be limited to cultivation, harvesting, extraction (or other processing), packaging and labeling. "Processing" comprises the events whereby dried plant material is selected and then converted to feedstock oils, which feedstock oils are blended to create finished bulk oils. Citiva Medical's processing methodology is designed around the following criteria:

(I) SECURITY OF WASTE PLANT MATTER

Citiva Medical's method of processing reduces plant matter to a material with no value of diversion. Our dust collection method includes a monitor point and returns dust to processing.

(II) LOT TRACEABILITY, MONITORING, RECORDING AND CONTROL

A harvest's provenance follows it through the manufacturing process and into final retail units. This allows for precise control over recall events. Sufficient quantities of each retail lot will be produced to ensure that patients will not receive more than two (2) distinct lots for any 30 day supply dispensed, compliant with regulation 1004.12.j.

(III) SCALABILITY

Citiva Medical's methodology allows for fast scale-up as patient demand increases.

(IV) SAFETY OF WORKERS

Citiva Medical's CO2 extraction methodology uses lower pressures, multiple safety measures and control of all volatile gases. Our methodology minimizes risks of spillage. Material is decanted from stage to stage in a closed-loop system, and tests are performed at each step to monitor yield and composition.

(V) CONSISTENCY OF QUALITY MEDICINE

Citiva Medical's methodology does not depend on the incoming material for the final composition of the medicine. Feed-stocks are produced for use in the final blending process. Such allows for exacting consistency of each lot of final oil.

(VI) MANUFACTURING THROUGHPUT AND EFFICIENCY

Citiva Medical's methodology allows for approximately five (5) times the throughput of CO2 extraction alone with greater flexibility and much higher efficiency of extraction.

7.5 EXTRACTION METHODOLOGY

Citiva Medical will use an extraction method that utilizes CO2 gas, in large part due to its extremely effective and safe nature, in a professional grade, closed-loop gas extraction system in compliance with all applicable fire, safety and building codes and other New York laws.

CO2 is an inert, non-flammable, colorless, odorless, water-soluble gas that has been used across many industries, including food and medicine. Since it is non-flammable and inert, there is limited risk for explosions and fires if used properly. Moreover, Citiva Medical will initiate appropriate standard operating procedures, follow all safety and storage precautions, and supply its extractors with proper safety equipment.

Specifically, the extraction process uses a liquid CO2 pump (Haskel, Burbank, CA or Hydraulics Intl., Chatsworth, CA) and thus the system uses recirculated chilled water to cool and liquefy CO2 gas at 600 psi. This cooled liquid CO2 is pumped into and through the extraction vessels (which contains the medical marihuana) at 1200 psi and 50F and then flows into the primary collector vessel that is maintained at 760 psi and 165F. This is where the extract-laden cold liquid CO2 is flashed to a gas, leaving behind the extracted material in the collector vessel. The CO2 gas thus formed passes through a secondary collector that is maintained at a lower temperature (that functions as a trap for water and blow-through oil), and then through a filter vessel that contains activated charcoal and alumina that serves to remove odor, oils and water from the CO2 gas before it is liquefied once again and pumped through the extraction vessels in a recirculating fashion.

Citiva Medical will only use certified safe components in its system. All components of the system, including all pressure vessels (reservoir vessels, extraction vessels, separator vessels, filter, vessel transfer lines, valves, pump gauges, etc.) are certified to operate at the pressure conditions required. Each extractor vessel is "code stamped" following the guidelines of the American Society of Mechanical Engineers (ASME) and manufactured in a facility that is certified to manufacture pressure vessels. It is important to note as well that this method uses a "closed-loop" system for added safety.

Liquid CO2, to meet purity regulations in 1004.11b, can be obtained in 50 lb or 60 lb liquid CO2 tanks with educator tubes from a local provider that supplies the beverage marketplace or a welding supply company. This CO2 will be utilized in the process and is introduced into the system via a series of transfer lines, valves and pumps. This is not a difficult or dangerous activity, but all safety precautions, including recommended eye protection, will be standard operating procedure.

Citiva Medical's method of extraction will be standardized for each strain in compliance with regulations 1004.11.

7.6 SPECIFIC FEATURES AND CHARACTERISTICS

7.6.1 PROCESSING AND EXTRACTION FACILITY

Citiva Medical shall establish the design, type, installation, implementation, handling and/or use of equipment, processes and methodologies for processing and extraction as follows.

Facility: Design, construction and build-out of a high performance Processing Facility (see facility and clean room diagrams and equipment provided in Section 1.1.3);

OSHA: OSHA compliance;

Equipment: Necessary processing and extraction equipment including CO2 extraction machines, code-stamped vessels, CO2 pumps and circulating chiller systems;

Packaging: Labeling processes, materials, design, protocols and sourcing;

Training: Training relating to alternative dosage form processing and extraction;

SOP's: Standard operating procedures;

Staffing: Optimum staffing plans;

Specificity: Tailoring products/branding to compliance with New York law;

Method: Extraction process methodologies, training, guidance and assistance involving:

Step I: extraction utilizing CO2 in the liquid phase (1200 psi and 55F) and in a recirculating fashion;

Step II: removing water and waxes, removing solvents, collecting terpenes and decarboxylation; and

Step III: finalization of effective oil for use for all alternative dosage form products.

7.6.2 QUALITY CONTROL TESTING FACILITY

Citiva Medical will design, install, implement, handle and utilize equipment, processes and methodologies for high performance quality control testing as follows:

Facility: Design, construction and build-out of the quality control testing facility featuring all laboratory (profiling) equipment and testing;

OSHA: OSHA compliance;

Equipment: High Performance Liquid Chromatography to conduct cannabinoid profiling by way of quantitative analysis for the following cannabinoids: delta 9 THC; delta 9 THC Acid; CBD; CBD Acid; CBN; and other active cannabinoids (i.e., THCV, CBC, CBG) and other active ingredients (i.e., terpenes) as standards become available;

Training: Training and modules with respect to quantitative analysis to be perform with respect to quality control testing;

SOP's: Standard operating procedures manual preparation and updating;

Staffing: Optimum staffing plans.

7.6.3 HEALTH AND CONSUMER PROTECTION

Citiva Medical shall operate in compliance with Good Manufacturing Practices for Food, including sanitation, food protection and labeling. Labeling practices will indicate:

mg amount of active constituents (THC and CBD);

as in the Nutritional and Dietary Supplement Facts, the amount of calories, grams fat,

sugar, etc.;

list of ingredients; and

all other matters and/or items required under State law.

7.6.4 RESEARCH AND DEVELOPMENT

Citiva Medical's expertise will allow the company to benefit from innovative products, and research and development activities, all leading to best practices and developments that may include:

CBD's: Sourcing, extracting and working with CBD-exclusive or dominant products;

Delivery: New delivery devices and systems such as modification to vaporizes in accordance with best practices and new development;

Molecular: Isolation, alteration and recombination activities at the molecular level with items such as THC, CBD's and terpenes to tailor alternative dosage forms for specific ailments, diversity, quality and the like.

Studies: Participation in studies and trials involving alternative dosage form products relating to chemotherapy advances, opiate dependency abatement or otherwise.

7.6.5 FORMS AND BRANDS

Forms and brands will be in strict compliance with New York laws and regulations. The Citiva Medical brands and forms, with example names that will require State approval, are shown in the table below.

Redacted Pursuant to N.Y. Public Officers Law, Art. 6

7.6.6 SAFETY AND SECURITY

Citiva Medical shall provide proprietary safety and security plans specific to its processing, extraction and quality control testing facilities, including measures preventing unauthorized access, employee safety and security policies, personal safety matters and OSHA requirements.

7.6.7 TRACKING PROGRAM AND PROCEDURES

Citiva Medical will work with the State of New York to implement the State-mandated and State-selected "Seed-to-Sale" recordkeeping system. An Inventory Manager will be in charge of ensuring that all materials that are grown and processed into final approved medical marihuana products ready for transport to Dispensaries are tracked, recorded and traceable all along the supply chain. All records related to every individual plant from origin to final product as a component in a tincture, vaporization oil, or a capsule will be recorded and traceable, aiding in audits and recalls, if required. Citiva Medical will utilize the tracking systems to provide information related to:

Effective Database: supplying necessary database, record-keeping and reporting features;

Patient Matters: useful with legal compliance, data, marketing, outreach and communications;

Inventory Control: featuring effective control procedures.

7.7 DESIGN AND CLEAN ROOM ATTRIBUTES

7.7.1 FACILITY DESIGN AND MATERIALS/EQUIPMENT (AND DIAGRAMS)

The Citiva Medical Processing Facility will be designed with the best practices and design from clean room technology and implementation. Implemented in high-tech industries, such as aerospace and semi-conductor chip makers, this “clean room” concept will aid our goal of preventing any problems in Quality before they start. Implementing the Facility as a high-tech-style “clean room” means that we will eliminate all of the traditional sources of contamination in the structure and facility. This approach, combined with the experienced leaders and trained staff working in the Facility, gives us high confidence that a high level of Quality Assurance and Quality Control are inherently in built into all of our processes. The figure below shows the conceptual diagram of the Citiva Medical Processing Facility.

Figure 1: The Extraction/Processing area provides a safe, secure environment for preparing the approved products

Redacted pursuant to N.Y. Public Officers Law, Art. 6

Table 2: This Fixture and Equipment schedule has a tag column that maps to the location of the specific piece of equipment in the room diagram in the Figure above.

FIXTURE AND EQUIPMENT SCHEDULE

TAG	FIXTURE	MANUF./MODEL	REMARKS
A	CHILLER	NESLAB HX-750	each requires 208V; 3 phase; 45 amps. Requires cooling by air, H20 or refrigerant
B	GAS RECIRCULATOR	TAKAGI	recirculating on demand hot water heater (operating at up to 240,000 BTU/hr)
C	ROTARY EVAPORATOPS	-	-
D	VACUUM OVEN	-	-
E	EXTRACTOR (4)	-	20l extraction vessel (code-stamped)
F	PRE-SEPARATION COLUMN (1)	-	5L (code-stamped)
G1	COLLECTOR VESSEL (1)	-	20L vessel (code-stamped) as primary separator (operates hot)
G2	COLLECTOR VESSEL (1)	-	20L vessel (code-stamped) as primary separator (operates cool)
H	FILTER (1)	-	20L vessel (code-stamped)
I	PRE-EXTRACTOR RESERVOIR	-	-
J	LIQUID CO2 PUMP	1440 ASFD PUMP (HYDRAULICS INTERNATIONAL)	air driven pump operating at ca.8L/min
K	ROTARY SCREW AIR COMPRESSOR	-	60cfm; 208V; 3 phase; 30 amps
L	PUMP RESERVOIR	-	-
M	REFRIGERATED DRYER / FILTER	-	-
T-1	SST TABLE	TBD	30" x 96"
T-2	SST TABLE	TBD	30" x 72" featuring sinks/water
CH-1	LAB STOOL	TBD	

- *NOTE* ISO 8, CLASS 100.000 CLEANROOM ATTRIBUTES TO OVERLAY THE FACILITY AS DETAILED IN EXHIBIT B.

7.7.2 CLEAN ROOM ATTRIBUTES AND MATERIALS/EQUIPMENT (AND DIAGRAMS)

Citiva Medical will develop the Processing/extraction Facility with clean room attributes as described below:

a. ISO 8, Class 100,000 clean room with 15-20 air changes per hour in the manufacturing area, and half such amount of air changes in clean room gowning area featuring appropriate furniture;

b. A properly pressurized clean room (pressurized to .02”-.04” W.G. so as to prevent pestilence and outside debris from entering the process, and thus ensuring a “pure” product.

c. A more “laminar” flow of clean, conditioned air within the space will wash the production area with clean air and prevent debris from entering the process.

d. Proper placement of low wall returns will capture any particulate that may enter through personnel or process, and will provide a layer of protection for the product.

e. Clean conditioned air will provide comfort for personnel within the space so as to minimize particulate and bio burden (i.e.: sweat, skin squams) that can be absorbed by the product.

f. By nature, extraction is a dirty process characterized by oils and other debris entering the air stream. By supplying air through HEPA Filters of Fan Powered HEPA units (FFU’s), and recirculating the conditioned air (recirculating includes mixing the return air with fresh outside air), much of the impurities (oil, duct, etc.) will be removed from the space creating a cleaner environment.

g. A clean room environment will also provide less waste in the process as a clean (and easy to clean) space will allow for any spilled product to be easily contained and recycled for use.

h. Carbon/MERV filters on the air handing unit will also remove many odors associated with the process and prevent any disturbance to nearby neighbors.

i. The walls will be clean room wall panels (walls coated with a smooth faced FRP (glassboard) material as in the below attachments) to create a smooth, progressive and easy to clean surface that the New York State Department of Health will appreciate. Such material is FDA-compliant and has been tested against some of the harshest cleaning compounds found in the Pharma industry. Since the extraction process will involve heat and moisture, in addition to the presence of organic substances, mold growth potential is a risk. However, these walls can easily be cleaned to prevent the growth and spreading of mold.

j. A properly designed air delivery system will also help with controlling mold.

k. A clean room ceiling system (900 square feet of clean room ceiling grid with vinyl faced tiles) together with gaskets and sealed light fixtures (8 to 10) will prevent any particulate or

pestilence from entering the space. The ceiling tiles will be vinyl faced gypsum with sealed edges and can be easily "swiffered" for cleaning.

l. The same walls and ceiling system in the kitchen would be well received and provide an aseptic look to the kitchen that will be well received by the New York State Department of Health.

The following basic schematic shows the air path through a clean room:

Figure 2: The Clean Room design for the Extraction and Processing Facility will ensure a clean and dust free environment at all times.

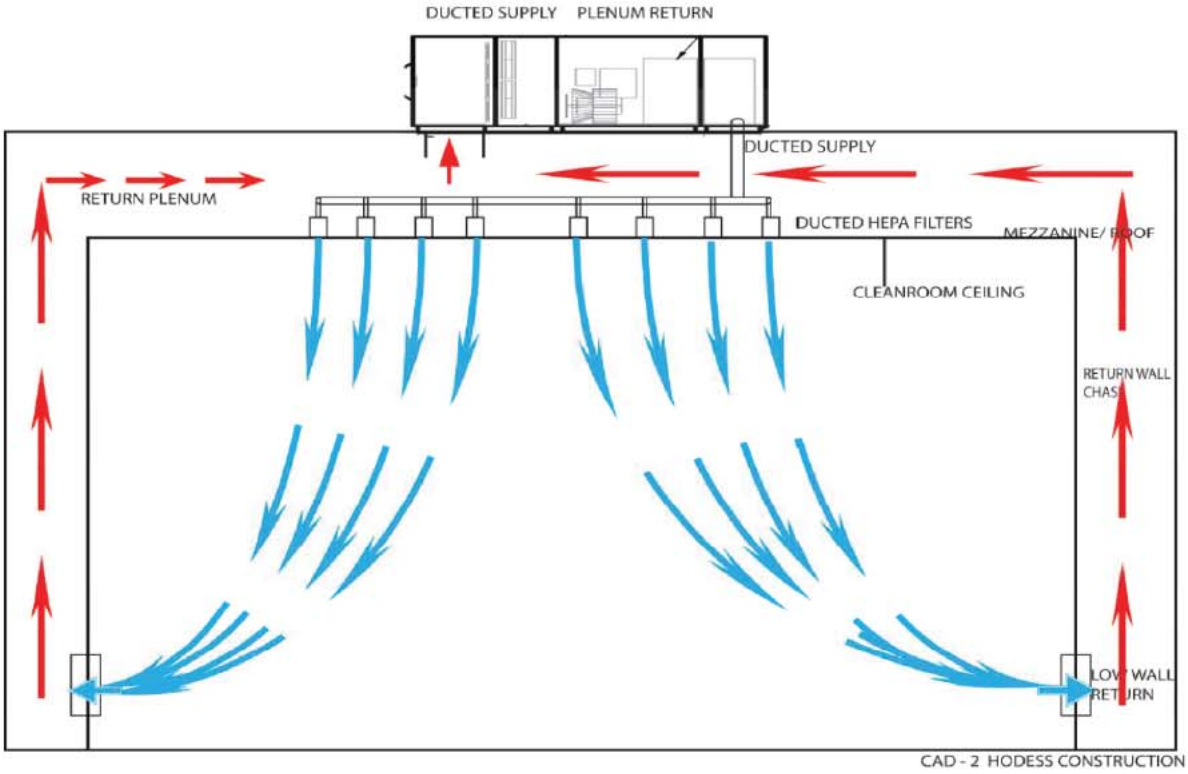

Figure 3: Example photo of the floor space of the planned interior of the Citiva Medical Processing Facility. The area will be a clean room environment with safeguards in place to prevent contamination of the products.

Redacted pursuant to N.Y. Public Officers Law, Art. 6

Figure 4: Example photo of the clean and orderly laboratory setting of the Processing Facility.

Redacted pursuant to N.Y. Public Officers Law, Art. 6

Figure 5: Quality, safety and security are of paramount importance. Worker safety is demonstrated in the example photo, highlighting fall prevention measures with barriers up to ensure that OSHA and New York State laws and regulations are met.

Redacted pursuant to N.Y. Public Officers Law, Art. 6

Figure 6: The Citiva Medical Processing Facility is specifically designed for our quality-assured equipment and processes. This example photo shows the approach Citiva Medical will take to build in design features and fixtures to accommodate the equipment. All building design starts with a clear understanding of the requirements of the extraction process.

Redacted pursuant to N.Y. Public Officers Law, Art. 6

7.8 PREPARATION, PROCESS AND PRODUCTS

7.8.1 INTRODUCTION

In this sub-section we describe our planned process for creating the approved medical marihuana products. We will use the CO2 extraction process to obtain bulk oils from a single strain of plant materials. The extracted sub-lot of oil will be tested and have a laboratory certification of its safety and components. Sub-lots of tested oil will be mixed to prepare the final lot of oil that will be used for the brands and forms of approved medical marihuana products. In this way, we will ensure that each lot is quality controlled and meets the regulations of consistency and purity (1004.11(a)(2)). We prefer to ensure meeting the standards in this manner, if the New York State Department of Health approves (blend homogenous sub-lots to create a final consistent homogenous retail lot). If the Department of Health does not approve, we will follow the guidance from the New York State Department of Health to create the specific lot for the brand and form, such as blending dried, tested, plant matter prior to extraction

7.8.2 CO2 PROCESSING SCHEMATIC

Figure 7: Citiva Medical will use a CO2 extraction process, shown to be clean, safe and reliable to produce extracts and oils for preparation of the five (5) brands and associated forms of approved medical marihuana products.

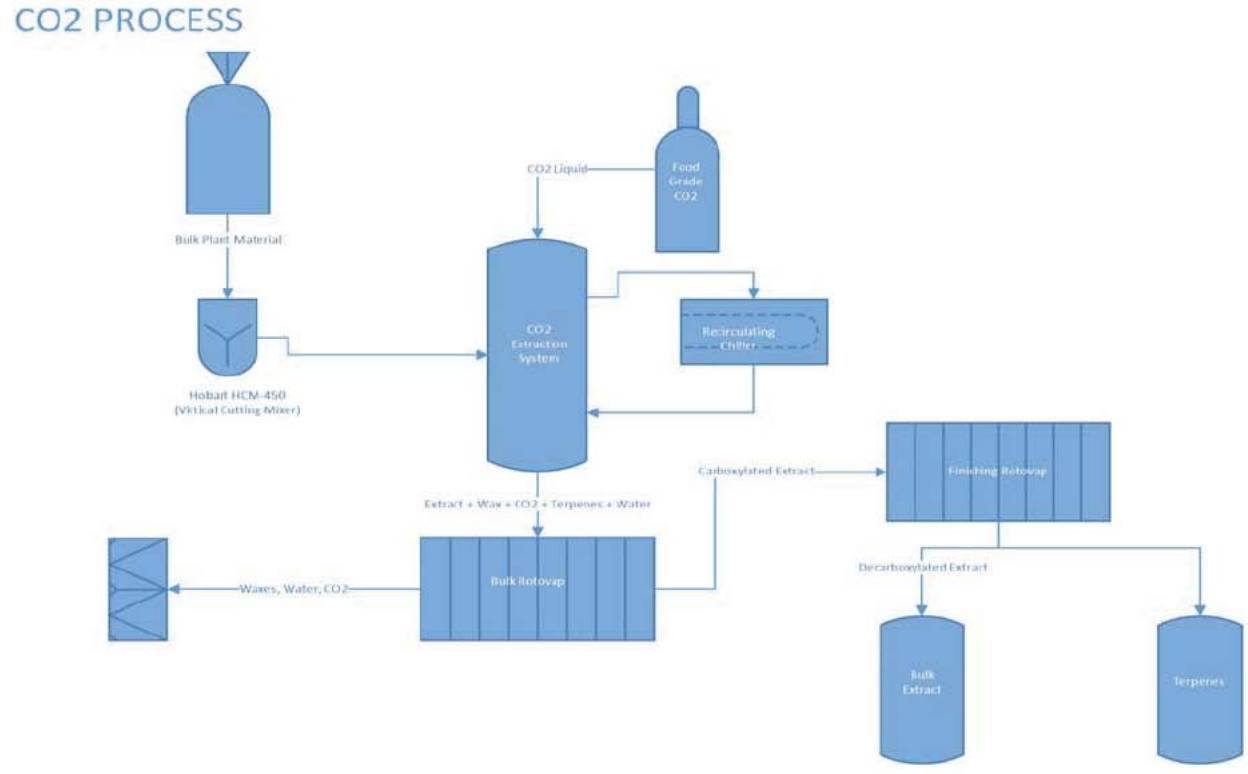

The above schematic captures the key components of the CO2 extraction process which is further detailed in sub-sections below. First, a Hobart HCM vertical cutting mixer is used to cut and reduce the particle size of the dried plant material to approx. 20 mesh to 40 mesh. One hundred pounds of the size-reduced plant material is then taken to further processing being defined as one sub-lot.

The CO2 extraction process functions in a recirculating fashion such that the extracted material along with waxes, water, terpenes and some amount of CO2 are contained within a collector. These components are then dispensed into a container en masse for further handling/processing.

The next step is to remove water from the initial bulk extract through the use of a rotary evaporator, and then to remove the waxes through a de-waxing step involving dissolution of the de-watered bulk extract into a solvent (such as ethanol), chilled to -20C for 12 hours and filtered. The filtrate is completely removed of any solvent using a rotary evaporator (that is used specifically for solvent removal). These two (2) steps remove water and waxes which are then discarded.

Finally, the oil (de-watered and de-waxed) is activated by decarboxylation of the acid forms of the cannabinoids under a vacuum and high temperature (up to 295F), and the terpenes are recovered in the process. The result is fully activated marihuana-extracted oil in one container and the terpenes in another container.

7.8.3 PREPARATION – CLIPPINGS AND PARTICLE SIZING

Clippings

After the harvesting and drying procedures, Citiva Medical will remove from the dried plant matter all active plant material, buds and fine leaves. Such removed material will be inventoried in accordance with the specific strain and harvest.

Particle Sizing

Active plant material, buds and fine leaves are reduced to approximately 1mm particle size. Dust is collected, weighed and added back to the reduced material before proceeding to CO2 extraction.

7.8.4 PROCESS – STEPS AND EQUIPMENT

a. Step I - Extraction Process and Material/Equipment

i. Equipment and Matters Utilized

All pressure vessels including extraction vessels, reservoir vessels, collector vessels, filter vessel and heat exchangers are designed, engineered and fabricated to our exacting specifications by Royal Welding, Fullerton, CA. All workers of Royal Welding are certified to ASME standards, and its machine shop is certified for the BioPharma, Nuclear and Aerospace Industry

The equipment and matters necessary with respect to Step 1 of the extraction process consists of the following:

- 100 lbs of dry ground marihuana.

- Six 20 L Extraction Vessels.
  –see Exhibit A attached hereto at end.

- Primary Collector.
  –see Exhibit B attached hereto at end.

- Secondary Collector.
  –see Exhibit B attached hereto at end.

- Filter.
  –see Exhibit B attached hereto at end.

- Rotary-screw Air Compressor (120 cfm; 120 psi) with Refrigerated Dryer. – see Exhibit C attached hereto at end.

- Recirculating Chiller (40 kW capacity at 50 F).
  -see Exhibit D attached hereto at end.

- Air-driven Liquid CO2 Pump (Haskel or Hydraulics Intl.) (8 L/min capacity).
  -See Exhibit E attached hereto at end.

- Reservoir of Liquid CO2 (Pump Reservoir).
  -See Exhibit F attached hereto at end.

- Recirculating Hot Water (40kW capacity at 165F).

- Pre-extractor Reservoir.
  -See Exhibit G attached hereto at end.

- Heat exchangers to convert gas CO2 to liquid CO2.
  -See Exhibit D attached hereto at end.

ii. Extraction Process

This step utilizes CO2 in the liquid phase (approx. 1200 psi and 50F) in a recirculating fashion to extract a substance/mixture of heavy oils containing the active ingredients (i.e. cannabinoids) from the marihuana plant material. The extracted substance/mixture, in addition to containing active ingredients, contains water, waxes, terpenes, etc. The CO2 extraction process typically takes one (1) hour per feed pound of marihuana feedstock, and results in a relatively clean product (final percentage purity of the cannabinoids is typically in the range of 60% to 75% purity of total cannabinoid content).

We will use an air driven liquid CO2 pump; and a recirculating chiller in order to cool and thus liquefy the CO2 from a gas at 600 psi to a liquid at 600 psi. The compressed air is supplied by a rotary screw air compressor supplying the dry compressed air to drive the liquid CO2 pump at a rate of 8 liters per minute. The bulk density of the finely chopped and ground (20 mesh to 40 mesh) medical marihuana material is 0.35 kilograms per liter; as such, a 20

liter vessel contains 7 kg of medical marihuana. The cool pressurized liquid CO2 extracts out of the plant material the cannabinoids along with terpenes, waxes and other heavy oils. The liquid CO2 at 1200 psi then passes through a collector that is maintained at 165 F and a lower pressure of 760 psi, resulting in the extract being deposited into that vessel. (This extract is what is collected and taken for further processing – see below *Step II –Post-Extraction Process).* The hot CO2 gas then passes through a cool secondary collector trapping out any aerosols, water and blow-through oil. After the secondary collector action, the now-cooled CO2 gas passes through a filter to remove water and odors. The now cool clean CO2 gas is at 600 psi and is re-liquefied (by the chilled heat exchangers) so that the liquid CO2 pump can again pump it through the system.

The result of the process thus described will produce ca. 9 kg of bulk extractables from 100 lbs of feedstock that is taken to the next step.

b. Step II – Post-Extraction Process and Materials/Equipment

i. Equipment and Matters Utilized

- Rotary Evaporator
- Ethanol
- Freezer
- Stainless Steel Tables
- Lab Stools

ii. Post-Extraction Process

Extract collected from *Step I* (that is, the nine (9) kgs) contains water, waxes, terpenes, cannabinoids and heavy oils. In *Step II*, this mixture is handled with a proprietary process to (i) remove water ("de-watering"); (ii) remove waxes ("de-waxing"); (iii) remove solvents; and (iv) decarboxylization of the "acid" form of the cannabinoids into their "active" decarboxylated form by using heat, resulting in the conversion, for example, of THC Acid into fully activated decarboxylated THC, and the removal of terpenes.

The processes of de-watering, de-waxing, solvent removal and decarboxylization are more fully described below:

I. De-watering

De-Watering increases the stability of the final product. Extract collected from CO2 extraction contains water, waxes, terpenes, cannabinoids and some plant oils. Such material is rotary evaporated to remove water and some low boiling-point terpenes. This process results in a 10-15% reduction in the bulk oil mass through the removal of water.

(a) De-waxing

This step uses alcohol of purity defined in 21 USC 321. De-waxing improves the tincture and vaporization performance of the final products. Wax increases viscosity, and can cause blockages in vaporization cartridges. Wax reduces the stability of the tincture emulsion or

increases the requirement for excipients, such as surfactants and emulsifiers. The resulting bulk oil mass from de-watering is placed into a food-grade container. For each one-(1)-kilogram of bulk oil mass, three-kilograms of ethanol are added and mixed with gentle stirring. The resulting blend is placed into an explosion-proof freezer at -20 C for at least six (6) hours, and thereafter the blend of bulk oil, ethanol and precipitated waxes is vacuum filtered to remove the waxes.

(b) Solvent and Terpene Removal

The filtrate obtained above – containing bulk oil and ethanol – is placed into the rotary evaporator to remove all the alcohol from the filtrate distillation. After the alcohol is removed by this process the terpenes are collected thus leaving the oil both ethanol and terpene free. Terpenes are collected separately to be added back in a final step for adjustment of viscosity.

(c) Decarboxylation

At this point all of the terpenes have been removed and the temperature of the rotovapor bath (in the rotary evaporator) is increased from 200 F to approximately 295 degrees Fahrenheit for 7-10 minutes to complete the decarboxylation of the cannabinoids in the oil. This step is perhaps the most crucial as it renders all of the cannabinoids in the material into a completely activated form.

c. <u>Step III – Final Form, Testing and Storage and Materials/Equipment</u>

i. <u>Equipment and Matters Utilized</u>

- Gas Chromatograph with Mass Sensitive Detector (GC-MSD).
- High Performance Liquid Chromatograph with Digital Diode Array Detector (HPLC-DAD).
- Laminar Flow Hood.
- Incubator.
- Vacuum Oven.

ii. <u>Final Form Process</u>

Product from ***<u>Step II</u>*** is a viscous, heavy oil that has a potency of about 60% - 75% cannabinoid content by weight.

At this stage (Step III), the heavy oil will be assigned a sub-lot number that correlates with the plant material utilized in ***<u>Step I</u>*** (sub-lot number and chain of custody procedures will allow for any final product to be traced back to the actual plant, the location such plant was grown, the person(s) responsible for cultivating and growing such plant, and the person responsible for transporting such plant).

The resulting heavy oil will be tested, analyzed and verified as to cannabinoid content, Total Plate Count (yeast, mold, E. coli), heavy metals, mycotoxins, pesticides, herbicides, fungicides and miticides.

This heavy oil is placed in a food-grade sealable container, weighed, quarantined and tested per regulation 1004.11.6.c.2. Results are recorded on the container, along with other information including sub-lot identifier. It is sealed with a tamper evident seal by the product manager. This container is checked into finished bulk inventory.

This heavy oil can now be used in alternative dosage form products. At this point, the material is clean, well-characterized and suitable to proceed to the next step of preparing the defined medical marihuana brands and forms under New York law.

7.8.5 PRODUCTS – PRODUCTION AND TYPES

FORMS PRODUCTION PROCESS

Oil obtained from processing marihuana with liquid CO2 is a lipophilic material and must be handled carefully so as to prepare it into useable dosage forms that are generally speaking aqueous based with the exception of the vaporization oil. This process requires a particular level of expertise as provided by Dr. John Pierce (Citiva Medical's Analytical Chemist) who holds a Ph. D. in Analytical Chemistry and patents on handling natural product materials and extracting oils and compounds from them into useable dosage forms. Judicious use of emulsifiers/surfactants is essential in preparing the approved medical marihuana tinctures, vaporization oils and capsules.

Sanitation and alternative dosage product protection are accommodated by conforming to procedures required under all local, State and Federal requirements, as applicable. Each approved medical marihuana product will have a bar code in which is compiled all information such as chain of custody, batch number, dates and chemical analyses (all tracked in Citiva Medical's State-selected POS/Inventory Management System). Labeling, in addition to that described above, will indicate the mg amount of active constituents (THC and CBD) and indicate, as is the case in the Nutritional and Dietary Supplement Facts, disclosure of calories, grams fat, grams sugar, etc. A detailed list of ingredients will be on the label, in addition to all other requirements under New York law.

Finished Oils are created by blending bulk oils of known composition to obtain consistent, homogenous, uniform finished oil for the production of each brand and form as required by regulation 1004.11. The resulting product is tested and adjusted further if necessary.

FORMS OF FINAL APPROVED MEDICAL MARIHUANA PRODUCTS

Citiva Medical will provide options for patients in forms of products in compliance with New York law as follows:

(i) Manufacture of Powdered Extract for Capsule Products

Capsules are two-(2)-piece, enteric coated capsules filled with a powder extract as follows: a carrier formula, composed of excipients approved by the New York State Department of Health, is added to an appropriately sized ribbon blender. The required amount of finished oil for the brand and form is slowly dispersed in the operating blender to obtain a concentration of active components that meets the target dosage requirements for capsule manufacture. The resulting powder is quarantined and tested as per regulation 1004.11.6.c.2.

(ii) Manufacture of Tincture Oil-Water Emulsion

Pure oil is not stabilized against bacteria or fungus. In a finished multi-use product such as a dropper bottle, pure oil has the opportunity to be contaminated by the patient. Tincture is manufactured using oil-in-water homogenization with stabilizers to improve biological stability and create a stable shelf-life. This process has been used by members of Citiva Medical for several years without incident.

In a food-grade stainless steel container, water prepared by reverse-osmosis and filtering is combined with USP glycerin and heated to 180 degrees Fahrenheit to pasteurize the liquid. Emulsifiers and a preservative, approved by the New York State Department of Health, are added with high-shear blending to the water-glycerin liquid. A quantity of decarboxylated finished product oil specific to brand and form, containing the requisite amount and ratio of THC and CBD, is added to the liquid blend with high-shear blending. The resulting liquid is homogenized with an Ultrasonic flow-through homogenizer to achieve a stable oil-water emulsion.

The resulting emulsion is quarantined and tested as per regulation 1004.11.6.c.2. Additional testing such as shelf stability, specific gravity, oil-particle size may be done as allowed by the New York State Department of Health.

(iii) Manufacture of Oil for Vaporization

Oil for vaporization must be free of waxes, water and be of a consistent viscosity in order to perform with consistent dosing in a vape cartridge. Bulk oils of known composition are blended in calculated quantities to produce a lot of finished oil for vaporization that meets the specifications of the brand. The resulting oil is quarantined and tested as per regulation 1004.11.6.c.2. Additional tests such as viscosity testing, and specific gravity may be done as allowed by the New York State Department of Health.

8 PACKAGING AND LABELING

Packaged goods are created from Finished Oils and Powdered Extracts.

8.1 PACKAGING OF TINCTURE PRODUCTS

i. Incoming bottles are washed and dried in a food-safe bottle washer.

ii. Finished Tincture Oil-in-Water Emulsion is dispensed into sterile one-(1)-ounce bottle that is light resistant in compliance with regulation 1004.11.i.

iii. Child-resistant dropper assembly with graduated markings is mated to the one-(1)-ounce filled resealable bottle and affixed with a tamper-resistant/evident seal in compliance with regulation 1004.11.i.

iv. Label is affixed (containing all information required under regulations 1004.11.j-k).

v. Bottles are placed in a case and a tamper evident seal is affixed for shipment to dispensary.

vi. Samples are tested according to Quality Control process and Current Good Manufacturing Processes (CGMP) and retained samples for the future are taken and archived.

8.2 PACKAGING OF VAPORIZATION OIL

i. Vaporization oil with defined THC and CBD content is dispensed into 1 mL cartridge and assembled.

ii. Assembled cartridge is sealed within a tamper-resistant/evident container.

iii. Label is affixed.

iv. Samples are tested according to Quality Control process and Current Good Manufacturing Processes (CGMP) and retained samples for the future are taken and archived.

8.3 PACKAGING OF POWDER-EXTRACT CAPSULES

i. Finished powdered-extract (P.E.) is filled into a “1” sized capsule.

ii. Capsules are placed into a 30-count bottle, other size, or blister pack as decided upon by the New York State Department of Health.

iii. Tamper-resistant/evident seal is affixed and sealed.

iii. Label is affixed.

iv. Samples are tested according to Quality Control process and Current Good Manufacturing Processes (CGMP) and retained samples for the future are taken and archived.

9 MAINTENANCE

The CO2 extraction operation entails the use of various pieces of support equipment. Such pieces of support equipment have their own periodic maintenance schedules, including without limitation that which relates to:

- the rotary screw air compressor (see owner’s manual for maintenance schedule);
- the recirculating chillers (see owner’s manual for maintenance schedule); and
- the air-driven liquid CO2 pump (from either Haskel or Hydraulics International).

The air-driven liquid CO2 pump requires the most vigilance to maintain. Replacement seals and gaskets within the pump need to be replaced on a periodic basis. In most cases, such seals and gaskets should be replaced before failure, such as every four weeks of continuous operation. In addition, a spare pump(s) can be swapped out so that the pump in question can be addressed without any loss in processing time.

After each “run” of extracting the oil from the marihuana, then the O-rings that serve to provide the pressure seal for the extraction vessels are replaced with new O-rings.

On a quarterly basis, the filter (located just upstream from the chilled heat exchanger) that is used to remove the odor and “blow-through” water and oil should be replaced with fresh activated charcoal and alumina. On a weekly basis, this filter should be placed under vacuum for 12 hours before re-utilizing.

The water that is chilled by the recirculating chillers needs to be checked weekly for any algal growth in its reservoir, and should be cleaned, disinfected and replaced accordingly with some amount of anti-freeze in the chilled water solution.

The water that is heated in the recirculating heating system also needs to be replaced periodically, that is, roughly speaking, every month.

After each extraction cycle for one sub-lot, the collection vessel should be opened and cleaned with an appropriate solvent such as ethanol or isopropyl alcohol to remove any residues from the previous extraction run. This is to insure that each sub-lot that leads to the extracted oil does not have any oil in it from the previous sub-lot.

10 DESTRUCTION OF MATERIALS, SUB-LOTS, LOTS AND PRODUCTS

Citiva Medical will destroy and make unrecoverable, beyond reclamation, any plant material, sub-lot, lot, or products that do not pass the Quality Control tests that are implemented at every step of the manufacturing process.

Any plant material, sub-lot, lot, or products not meeting the minimum standards or specifications established in our Quality Assurance Plan for safety shall be rejected and destroyed by Citiva Medical. These materials will be made unrecoverable, beyond reclamation. The disposal process will be carried out by the Shift Supervisor or Processing Manager and witnessed by a Security Officer. All processes and activities will be recorded in the State-selected Seed-to-Sale software system. Records will be maintained for a minimum of five (5) years.

Citiva Medical will use an approved incineration method or a destruction service approved by the State to make unrecoverable, beyond reclamation, any material, lot of oil or products that do not pass the Quality Control test implemented at each step of the manufacturing process.

10.1 PROCEDURE TO QUARANTINE AND DESTROY MATERIALS, SUB-LOTS, LOTS AND PRODUCTS

1. Materials that do not pass the Quality Control process are immediately quarantined from the other nearby materials.
2. Security is called to witness the Quarantine Procedure. No steps are taken until the witness Security Officer is present.
3. The materials to be quarantined and destroyed are double-bagged in high strength marked, specifically-made Quarantine bags with care taken to prevent contamination of nearby areas.
4. The bags will be marked with a red and white stripe that says, “FAILED QC-DO NOT USE!”
5. Only a trained worker trained in these processes can conduct the Quarantine Process
    a. When in the Cultivation Facility, the Shift Supervisor leads the Plant Quarantine Process
    b. When in the Processing Facility, the Production Manager leads the Product Quarantine Process

6. The double bagged materials are taken to the high security quarantine/containment room, escorted by a Security Officer. If not destroyed immediately, the materials are placed in a safe to prevent any tampering or diversion.
7. The weight and analytical tests of waste plant material will be recorded.
8. The weight and analytical tests of waste oil material will be recorded.

9. At the time of destruction, the Shift Supervisor or Processing Manager who load the furnace/incinerator are witnessed by a Security Officer throughout the process. Permanent records are created in the Seed-to-Sale software system.
    a. A high temperature furnace/incinerator will be used to destroy materials that do not pass the Quality Control standards.

10. The furnace/incinerator is within the quarantine area.
11. The materials are loaded into the high temperature furnace/incinerator for destruction. The Shift Supervisor (for Cultivation) or the Processing Manager (for Processing) and the Security Officer will witness the initiation of the destruction of the materials. The furnace/incinerator will feature a “lock-out” capability once it is turned on.
12. Standard furnace/incinerator clean out procedures for the ash will be followed with Quality Control tests to ensure that the materials are rendered completely unrecoverable and beyond reclamation.
13. The ash will be disposed of according to handling procedures for waste materials for the Manufacturing Facility.
14. Lot traceability, chain-of-custody and proper records will be maintained throughout.

11 EXHIBITS

11.1 EXHIBIT A – EXTRACTION VESSELS

Figure 8: Citiva Medical uses CO2 extraction processing - a proven technology used across the food processing industry. The extraction vessels contain the feedstock plant material in the CO2 processing.

Redacted pursuant to N.Y. Public Officers Law, Art. 6

11.2 EXHIBIT B – COLLECTORS AND FILTERS

Figure 9: High-grade laboratory equipment and tailor-made fixtures ensure a safe and secure processing environment. All extraction products are to be collected and filtered in a laboratory set-up similar to this.

Redacted pursuant to N.Y. Public Officers Law, Art. 6

11.3 EXHIBIT C – ROTARY-SCREW AIR COMPRESSOR

Figure 10: Example photo of a rotary-screw air compressor that is highly efficient and cost effective. It supplies the reliable compressed air in support of the extraction process, supplying the dry compressed air to drive the liquid CO2 pump at a rate of 8 liters per minute.

Redacted pursuant to N.Y. Public Officers Law, Art. 6

11.4 EXHIBIT D – RECIRCULATING CHILLER

Figure 11: The recirculating chiller supports the extraction process with precision temperature control to cool, and thus liquefy, the CO2 from a gas at 600 psi to a liquid at 600 psi.

Redacted pursuant to N.Y. Public Officers Law, Art. 6

11.5 EXHIBIT E – AIR-DRIVEN LIQUID CO2 PUMP (MIDDLE OF PHOTO DISPLAYS THE BLUE LIQUID CO2 PUMP)

Figure 12: Center of Photo – in blue color: Example of the manufacturing set-up of the air-driven liquid CO2 pump, a key component of the extraction process. The liquid CO2 pump will be manufactured by Haskel, Burbank, CA or Hydraulics Intl., Chatsworth, CA.

Redacted pursuant to N.Y. Public Officers Law, Art. 6

11.6 EXHIBIT F – RESERVOIR OF LIQUID CO2 PUMP (RIGHT SIDE OF PHOTO DISPLAYS THE RESERVOIR)

Figure 13: Right Side of Photo: Example of the manufacturing set-up of the reservoir of liquid CO2. This reservoir is to be designed, engineered and fabricated to our exacting specifications by Royal Welding, Fullerton, CA

Redacted pursuant to N.Y. Public Officers Law, Art. 6

11.7 EXHIBIT G – PRE-EXTRACTOR RESERVOIR (LEFT SIDE OF PHOTO DISPLAYS THE PRE-EXTRACTOR)

Figure 14: Left Side of Photo: Example of the manufacturing set-up of the Pre-Extractor Reservoir, a key component feeding CO2 to the pump in support of the extraction process.

Redacted pursuant to N.Y. Public Officers Law, Art. 6

11.8 EXHIBIT H – HEAT EXCHANGERS TO CONVERT GASEOUS CO2 TO LIQUID CO2

Figure 15: The bank of heat exchangers will cool the clean CO2 gas. Starting as a gas at 600 psi, the gas is re-liquefied (by the chilled heat exchangers) so that the liquid CO2 pump can again pump through the processing system.

Redacted pursuant to N.Y. Public Officers Law, Art. 6

11.9 EXHIBIT I – PACKAGING

11.9.1 TINCTURES

Figure 16: Child-resistant dropper assembly with graduated markings is mated to the one-ounce filled resealable bottle and affixed with a tamper-resistant/evident seal in compliance with regulation 1004.11.i.

11.9.2 VAPORIZATION OILS

Figure 17: Vaporization oil with defined THC and CBD content is dispensed into 1 mL cartridge and assembled.

11.9.3 CAPSULES

Figure 18: Finished powdered-extract (P.E.) is filled into a "1" sized capsule. Capsules will be placed into a 30-count bottle.

11.10 EXHIBIT J – LABELS

CAPSULE BLISTER PACK LABEL

Redacted Pursuant to N.Y. Public Officers Law, Art. 6

TINCTURE BOTTLE LABEL

Redacted Pursuant to N.Y. Public Officers Law, Art. 6

VAPORIZATION PEN BUTTERFLY LABEL

Redacted Pursuant to N.Y. Public Officers Law, Art. 6

VAPORIZATION PEN LABEL

Redacted Pursuant to N.Y. Public Officers Law, Art. 6

11.11 EXHIBIT K – PATIENT SAFETY INSERTS

Redacted Pursuant to N.Y. Public Officers Law, Art. 6

Redacted Pursuant to N.Y. Public Officers Law, Art. 6

Redacted pursuant to N.Y. Public Officers Law, Art. 6

Figure 20: Citiva Medical package patient safety inserts will comply with New York State regulations. These examples show the candidate information for the safety inserts.

CITIVA MEDICAL LLC

MEDICAL MARIHUANA PROGRAM

ATTACHMENT D

OPERATING PLAN – SECTION 2 – Transport and Distribution

SECTION 2

Transport and Distribution

Citiva Medical LLC

1 TABLE OF CONTENTS

2 OVERARCHING DESCRIPTION AND APPROACH 2
2.1 ORGANIZATION CHART 3
2.2 JOB DESCRIPTIONS 4
2.2.1 DIRECTOR OF SECURITY 4
2.2.2 INVENTORY SPECIALIST 4
2.2.3 SECURITY OFFICER (LOGISTICS AND DELIVERY) 4
2.3 DESCRIPTION OF ACTIVITIES FOR TRANSPORT AND DISTRIBUTION 5
2.4 WORK/PROCESS DIAGRAM 6
2.5 FACILITY-WIDE SECURITY PROTOCOLS 7
2.6 POLICIES AND PROCEDURES 8
2.6.1 POLICY 8
2.6.2 RESPONSIBILITY 8
2.6.3 SAFETY 9
2.6.4 ACCIDENTS: LOSS OR THEFT 9
2.6.5 DELIVERY STAFFING 9
2.6.6 DELIVERY EQUIPMENT 9
2.6.7 COMMUNICATION 9
2.6.8 PRE-TRANSPORT DOCUMENTATION 10
2.6.9 PROCEDURE FOR TRANSPORTING APPROVED MEDICAL MARIHUANA PRODUCTS TO A REGISTERED ORGANIZATION DISPENSARY 10
2.6.9.1 BEFORE TRANSPORTATION 10
2.6.9.2 DURING TRANSPORTATION 10
2.6.9.3 AFTER TRANSPORTATION 11
2.6.10 PROCEDURE FOR TRANSPORTING APPROVED MEDICAL MARIHUANA PRODUCTS TO A LICENSED TESTING LABORATORY 11
2.6.10.1 BEFORE TRANSPORTATION 11
2.6.10.2 DURING TRANSPORTATION 11
2.6.10.3 AFTER TRANSPORTATION 12
2.7 TRANSPORTATION 12
2.7.1 SHIPMENT FROM MANUFACTURING FACILITY TO LABORATORIES AND DISPENSARIES 12
2.7.2 RECEPTION AT LABORATORIES AND DISPENSARIES 13
2.7.3 RETURN TO MANUFACTURING FACILITY 13
2.8 EQUIPMENT LIST 13
2.8.1 VEHICLES USED IN TRANSPORT AND DISTRIBUTION 13

Section 2 Transport and Distribution

2 OVERARCHING DESCRIPTION AND APPROACH

Redacted Pursuant to N.Y. Public Officers Law, Art. 6

Redacted Pursuant to N.Y. Public Officers Law, Art. 6

2.1 ORGANIZATION CHART

2.2 JOB DESCRIPTIONS

2.2.1 DIRECTOR OF SECURITY

Redacted Pursuant to N.Y. Public Officers Law, Art. 6

2.2.2 INVENTORY SPECIALIST

Redacted Pursuant to N.Y. Public Officers Law, Art. 6

2.2.3 SECURITY OFFICER (LOGISTICS AND DELIVERY)

Redacted Pursuant to N.Y. Public Officers Law, Art. 6

2.3 DESCRIPTION OF ACTIVITIES FOR TRANSPORT AND DISTRIBUTION

Citiva Medical is particularly sensitive to all risks surrounding the transportation of approved medical marihuana products and will continually work in collaboration with local and State law enforcement to identify potential dangers and minimize risk. In light of the violence that has occurred within the medical marihuana industry across the country, Citiva Medical is well aware of the real risk presented to Dispensaries and cultivation facilities. Transportation of marihuana and approved medical marihuana products presents an increased risk. Citiva Medical is dedicated to safeguarding employees and product.

Citiva Medical has taken extreme care with respect to developing its Safety and Security Plan, and in establishing the protocols relating to the transportation of approved medical marihuana. Citiva Medical has adopted the highest standards and best practices being implemented in other operations associated with our team such as in Maine, Rhode Island, Colorado and Nevada. The Citiva Medical team is implementing the best practices developed by our security team and enhanced by law enforcement officials familiar with this industry. Citiva Medical will implement an efficient set of procedures designed to securely transport marihuana and approved medical marihuana products in accordance with New York State laws and regulations.

With a Manufacturing Facility and four (4) Dispensaries, Citiva Medical will coordinate deliveries between its facilities in accordance with the New York regulations and laws, and according to the policies and procedures in its Application to become a Registered Organization.

Redacted Pursuant to N.Y. Public Officers Law, Art. 6

Inventory transport will be managed by the Director of Security and Inventory Manager, and detailed written procedures will be provided to local law enforcement.

2.4 WORK/PROCESS DIAGRAM

Redacted Pursuant to N.Y. Public Officers Law, Art. 6

2.5 FACILITY-WIDE SECURITY PROTOCOLS

Redacted Pursuant to N.Y. Public Officers Law, Art. 6

Redacted pursuant to N.Y. Public Officers Law, Art.6

2.6 POLICIES AND PROCEDURES

2.6.1 POLICY

[redacted]

2.6.2 RESPONSIBILITY

The Director of Security is responsible for the maintenance and inspection of each Delivery Vehicle, defined below.

All of Citiva Medical's employees will be required to comply with this policy and for carrying his or her Registered Organization employee identification at all times.

2.6.3 SAFETY

The safety of each employee is a primary concern of Citiva Medical. If a Citiva Medical employee is ever placed in a situation where a weapon is displayed or alluded to for the purpose of theft of product, the employee should:

Redacted Pursuant to N.Y. Public Officers Law, Art. 6

2.6.4 ACCIDENTS: LOSS OR THEFT

Each Citiva Medical employee transporting marihuana and approved medical marihuana products must:

1. Report any vehicle accident that occurs during the transportation to the Director of Security within two (2) hours, where reasonably possible to do so, after the accident occurs; and
2. Report any loss or theft of approved medical marihuana products that occurs during the transportation to the Director of Security immediately after the Citiva Medical employee becomes aware of the loss or theft.

Immediately after receiving any report of loss or theft pursuant to paragraph 2 above, Citiva Medical shall immediately report the loss or theft to the appropriate law enforcement agency and to the New York State Department of Health.

2.6.5 DELIVERY STAFFING

Redacted Pursuant to N.Y. Public Officers Law, Art. 6

2.6.6 DELIVERY EQUIPMENT

Redacted Pursuant to N.Y. Public Officers Law, Art. 6

2.6.7 COMMUNICATION

Redacted Pursuant to N.Y. Public Officers Law, Art. 6

Redacted Pursuant to N.Y. Public Officers Law, Art. 6

2.6.8 PRE-TRANSPORT DOCUMENTATION

Redacted Pursuant to N.Y. Public Officers Law, Art. 6

2.6.9 PROCEDURE FOR TRANSPORTING APPROVED MEDICAL MARIHUANA PRODUCTS TO A REGISTERED ORGANIZATION DISPENSARY

2.6.9.1 BEFORE TRANSPORTATION

Redacted Pursuant to N.Y. Public Officers Law, Art. 6

2.6.9.2 DURING TRANSPORTATION

Redacted Pursuant to N.Y. Public Officers Law, Art. 6

Redacted Pursuant to N.Y. Public Officers Law, Art. 6

2.6.9.3 AFTER TRANSPORTATION

Redacted Pursuant to N.Y. Public Officers Law, Art. 6

2.6.10 PROCEDURE FOR TRANSPORTING APPROVED MEDICAL MARIHUANA PRODUCTS TO A LICENSED TESTING LABORATORY

2.6.10.1 BEFORE TRANSPORTATION

Redacted Pursuant to N.Y. Public Officers Law, Art. 6

2.6.10.2 DURING TRANSPORTATION

Redacted Pursuant to N.Y. Public Officers Law, Art. 6

2.6.10.3 AFTER TRANSPORTATION

Redacted Pursuant to N.Y. Public Officers Law, Art. 6

2.7 TRANSPORTATION

Redacted Pursuant to N.Y. Public Officers Law, Art. 6

2.7.1 SHIPMENT FROM MANUFACTURING FACILITY TO LABORATORIES AND DISPENSARIES

Redacted Pursuant to N.Y. Public Officers Law, Art. 6

Redacted Pursuant to N.Y. Public Officers Law, Art. 6

2.7.2 RECEPTION AT LABORATORIES AND DISPENSARIES

Redacted Pursuant to N.Y. Public Officers Law, Art. 6

2.7.3 RETURN TO MANUFACTURING FACILITY

Redacted Pursuant to N.Y. Public Officers Law, Art. 6

2.8 EQUIPMENT LIST

2.8.1 VEHICLES USED IN TRANSPORT AND DISTRIBUTION

Redacted Pursuant to N.Y. Public Officers Law, Art. 6

Redacted Pursuant to N.Y. Public Officers Law, Art. 6

CITIVA MEDICAL LLC

MEDICAL MARIHUANA PROGRAM

ATTACHMENT D

OPERATING PLAN – SECTION 3 – Dispensing and Sale

SECTION 3

Dispensing and Sales

1 TABLE OF CONTENTS

2 OVERARCHING DESCRIPTION AND APPROACH 2
3 ORGANIZATION CHART 2
4 JOB DESCRIPTIONS 3
4.1 CHIEF OF DISPENSARY OPERATIONS 3
4.2 SUPERVISING PHARMACIST (DISPENSARY MANAGER) 3
4.3 DISPENSARY PHARMACIST 3
4.4 DISPENSARY PATIENT ASSOCIATE 4
4.5 GENERAL MAINTENANCE ENGINEER 4
4.6 SECURITY OFFICER 4
5 FLOW DIAGRAM 5
6 FACILITY-WIDE SECURITY 5
6.1 RESPONSIBILITIES OF SECURITY PERSONNEL 5
6.2 OVERVIEW OF SECURITY LAYOUT: 6
6.2.1 ALARM SYSTEMS 6
6.2.2 SURVEILLANCE SYSTEMS. 7
6.2.3 ACCESS CONTROL SYSTEMS. 7
7 PRODUCT SECURITY 7
7.1 INVENTORY AND CASH HANDLING 7
7.2 ELECTRONIC VERIFICATION SYSTEM 7
7.3 QUALITY CONTROL PROCEDURES 8
8 POLICIES AND PROCEDURES 8
8.1 DISPENSING POLICY 8
8.2 LABELING POLICY 9
8.3 VISITOR POLICY 10
8.4 PRICING POLICY 11
8.5 MARKETING POLICY 12
8.6 RECORDS POLICY 14
9 DISPENSARY 15
9.1 PRODUCTS 15
9.2 FACILITIES 15
9.3 STAFF 16
9.3.1 STAFFING POLICY 16
9.3.2 TRAINING MODULES 16
9.4 INVENTORY 17
9.4.1 MONTHLY INVENTORY PROCEDURES 17
9.4.2 INVENTORY DISCREPANCY PROCEDURES 17
9.4.3 LOSS OF INVENTORY BY THEFT OR DIVERSION 17
9.5 OPERATING HOURS 18
9.6 OPENING 18
9.6.1 DISPENSARY INVENTORY OPENING PROCEDURES 18
9.7 CLOSING 18

9.7.1 DISPENSARY INVENTORY CLOSING PROCEDURES 18
9.7.2 PROCEDURES WHEN FACILITY IS CLOSED 19
10 FACILITY ACCESS PLAN 19
10.1 ACCESS CONTROLS – LOCATIONS AND RESTRICTIONS 19
10.2 SECURE STORAGE AND ACCESS 19
11 EQUIPMENT LIST 20
12 OUTREACH PLAN 20
12.1 SUSTAINABLE OUTREACH 20
12.2 PATIENT EDUCATION 20
12.3 PRACTITIONER EDUCATION 21
12.4 COMMUNICATIONS 21
13 CHARITY CARE INITIATIVE 21
14 SECURITY MAINTENANCE AND PRACTICES 22
14.1 SECURITY SYSTEM MAINTENANCE AND SOUND PRACTICES 22
14.2 TRANSPORT SECURITY AND OTHER POLICIES 22
15 EXHIBITS 23
15.1 EXHIBIT 1 – IMAGES FROM THE CITIVA MEDICAL WEBSITE 23
15.2 EXHIBIT 2 – EXAMPLE LABELS 25
15.3 EXHIBIT 3 – EXAMPLE PATIENT SAFETY INSERTS 27
15.4 EXHIBIT 4 - EXAMPLE SPECIFICATION SHEETS 30

2 OVERARCHING DESCRIPTION AND APPROACH

Founded to serve the needs of New York's certified medical marihuana patients, Citiva Medical combines extensive experience in various regulated industries with a deep understanding of commercial medical marihuana operations. Citiva Medical's core principles of integrity, transparency, security and compliance are critical to the successful implementation of a viable medical marihuana industry in the State of New York. In this context, Citiva Medical is well positioned to serve New York's registered patients, as well as to facilitate much-needed education and awareness. Even with the number of medical marihuana users growing, Citiva Medical is positioned, poised and more than capable of producing and stocking enough approved medical marihuana product to meet the needs of its share of New York State's certified patients.

The national market for regulated marihuana is experiencing strong growth by taking a naturally occurring commodity from illicit markets controlled by criminal organizations and placing it within the confines of regulated markets informed by sound public policy and developed with the public good in mind. An important additional benefit for local and State governments is the creation of a new source of tax revenue and jobs.

Citiva Medical's team is comprised of industry leaders with solid track records of success in regulated industries and the new and rapidly expanding medical marihuana business community. All of the founders of Citiva Medical know the great care and responsibility that comes with highly regulated and controlled industries. Citiva Medical possesses the professional, technical and material capacity to construct, develop, staff and operate a model medical marihuana dispensaries in the State of New York.

3 ORGANIZATION CHART

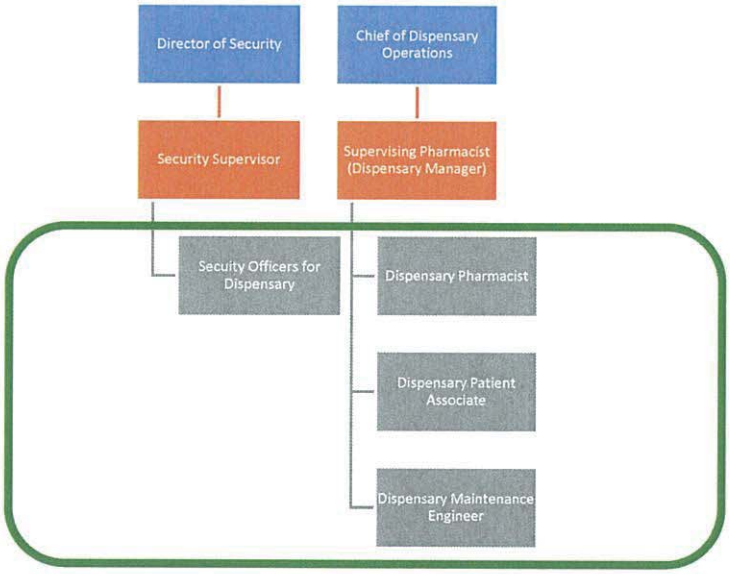

Figure 1: The Supervising Pharmacist leads the Dispensary team, supported by Security Officers from the Citiva Medical Security Team.

4 JOB DESCRIPTIONS

4.1 CHIEF OF DISPENSARY OPERATIONS

The Chief of Dispensary Operations shall:

1. Be responsible for the overall management and performance of Dispensary operations at Citiva Medical;
2. Oversee all Human Resource functions such as recruiting, training, managing and counseling of Dispensary employees and Dispensary management;
3. Be responsible for all paperwork, compliance, procedures, budgets, cash handling and day-to-day operations of the Dispensary;
4. Address all operational questions with the Supervising Pharmacist and act as the liaison to Senior Management;
5. Assist in the development of policies and procedures and be responsible for implementing them with the Dispensary management and employees; and
6. Report to the Chief Executive Officer.

4.2 SUPERVISING PHARMACIST (DISPENSARY MANAGER)

The Supervising Pharmacist shall:

1. Train store staff by reviewing and revising product and sales training materials; delivering training sessions; reviewing staff job results and assessing needs with the Chief of Dispensary Operations; developing and implementing new product training;
2. Ensure availability of merchandise by maintaining inventories;
3. Secure merchandise by implementing security systems and measures;
4. Protect employees and customers by providing a safe and clean store environment;
5. Maintain the stability and reputation of the store by ensuring that all legal and compliance requirements are followed;
6. Maintain inventory by checking merchandise to determine inventory level and anticipating demand; and
7. Report to the Chief of Dispensary Operations.

4.3 DISPENSARY PHARMACIST

The Dispensary Pharmacist shall:

1. Educate patients by explaining the medical advantages of therapeutic marihuana products to match patient needs;
2. Help patients by providing information; answering questions; obtaining merchandise requested; completing payment transactions;
3. Monitor sales and patient relations reports by analyzing and categorizing sales information; identifying and investigating complaints and service suggestions;
4. Maintain inventory by checking merchandise to determine inventory levels and anticipating demand;
5. Maintain quality service by establishing and enforcing organization standards; and
6. Report to the Supervising Pharmacist.

4.4 DISPENSARY PATIENT ASSOCIATE

The Dispensary Patient Associate shall:

1. Stock shelves, answer customer questions and complaints, ring up sales and assist customers as needed;
2. Effectively communicate with the Supervising Pharmacist, Dispensary Pharmacist and other Dispensary Patient Associates; and
3. Report to the Dispensary Lead Patient Associate.

4.5 DISPENSARY MAINTENANCE ENGINEER

The Dispensary Maintenance Engineer shall:

1. Pick up and remove trash from the parking lot and surrounding areas;
2. Maintain exterior including, but not limited to: sidewalks, parking lots, windows, receiving platform and dumpsters;
3. Maintain interior including, but not limited to: trash receptacles, floor mats, stairwells, restrooms, windows, water fountains, offices and stock area;
4. Maintain external appearance to include, but not limited to: grass cutting, weed pulling and general maintenance;
5. Perform interior maintenance including, but not limited to: replacing light bulbs, cleaning air-conditioning/heating vents, minor repairs of fixtures and structures, floor tape and general repair work;
6. Efficiently operate all related tools or accessories associated with maintenance; and
7. Report to the Supervising Pharmacist.

4.6 SECURITY OFFICER

Redacted Pursuant to N.Y. Public Officers Law, Art. 6

5 FLOW DIAGRAM

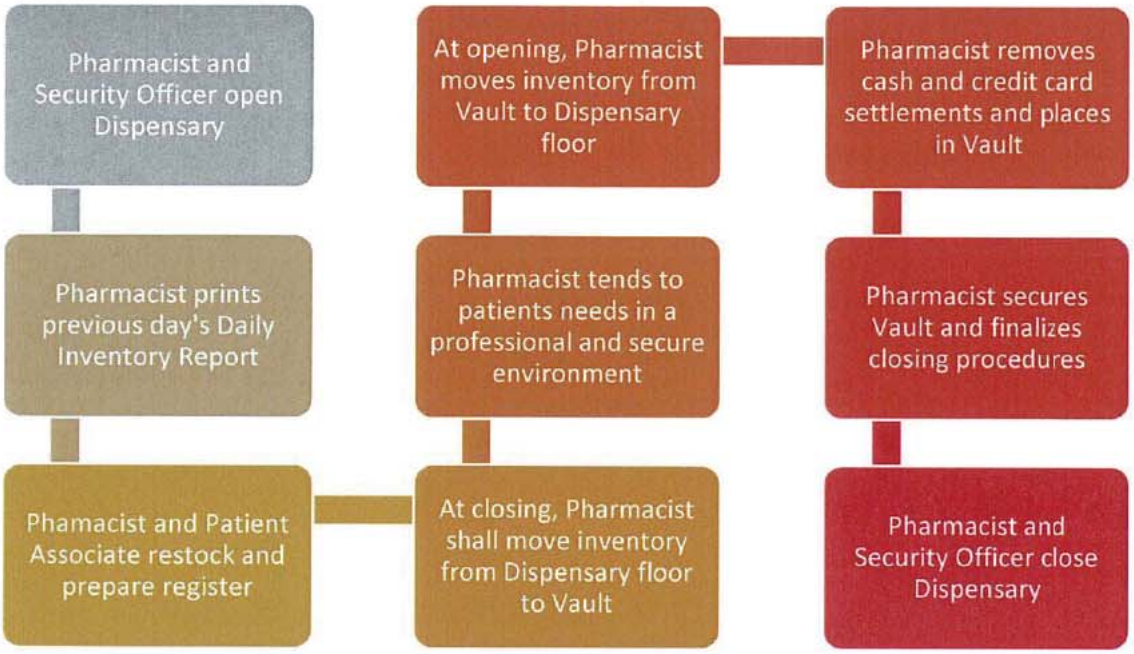

6 FACILITY-WIDE SECURITY

The safety and security of each patient and employee is the primary concern of Citiva Medical. If a Citiva Medical employee is ever placed in a situation where a weapon is displayed or alluded to for the purpose of theft of product, the employee should:

Redacted Pursuant to N.Y. Public Officers Law, Art. 6

6.1 RESPONSIBILITIES OF SECURITY PERSONNEL

Redacted Pursuant to N.Y. Public Officers Law, Art. 6

Redacted Pursuant to N.Y. Public Officers Law, Art. 6

6.2 OVERVIEW OF SECURITY LAYOUT

6.2.1 ALARM SYSTEMS

Redacted Pursuant to N.Y. Public Officers Law, Art. 6

Redacted pursuant to N.Y. Public Officers Law, Art. 6

6.2.2 SURVEILLANCE SYSTEMS

Redacted Pursuant to N.Y. Public Officers Law, Art. 6

6.2.3 ACCESS CONTROL SYSTEMS

Redacted Pursuant to N.Y. Public Officers Law, Art. 6

7 PRODUCT SECURITY

7.1 INVENTORY AND CASH HANDLING

Redacted Pursuant to N.Y. Public Officers Law, Art. 6

7.2 ELECTRONIC VERIFICATION SYSTEM

Citiva Medical will utilize the State-selected Seed-to-Sale software system as its Medical Marihuana Establishment electronic verification system. The system will allow for real-time inventory, patient management and point-of-sale accounting and reporting.

The system will monitor and record real-time data accessible by the New York State Department of Health including, but not limited to:

1. The amount of medical marihuana dispensed a particular patient or caregiver in order to ensure that the amount of medical marihuana dispensed does not exceed the maximum permitted by law;

2. Whether the medical marihuana was dispensed to the patient or to the designated primary caregiver of the patient;
3. The date on which and the time at which the medical marihuana was dispensed;
4. The number of the Citiva Medical's establishment registration certificate.

The State-selected software will also:

1. Enforce New York patient and caregiver sales limits;
2. Configure user authorizations (sets individual permission settings per employee);
3. Customize product labels (product ID, weight, THC and CDB content, additives, etc.);
4. Identify patient and caregiver medical marihuana registry cards and drivers' license expiration dates and will not allow purchases if card(s) are expired;
5. Scan patient documents;
6. Annotate Patient purchase history and wait time; and
7. Allow for employee time clock management via biometric fingerprint scan.

7.3 QUALITY CONTROL PROCEDURES

The Supervising Pharmacist/Dispensary Manager will conduct training classes for all employees who work under his/her direction. The following subjects will be taught: OSHA, Site Safety and proper Medical Marihuana Product Handling Techniques. These classes will be mandatory for all employees working in the Citiva Medical Dispensary.

All medical marihuana products will be securely stored, and environmental sensors will be used to monitor air temperature to ensure a stable environment. Remote monitoring and notification features will be installed so that the Supervising Pharmacist/Dispensary Manager can be contacted if the environment has slipped out of optimum.

A secure and environmentally stable display and storage area eliminates problems such as insects, fungi, spores and molds that can contaminate and adulterate marihuana products.

8 POLICIES AND PROCEDURES

8.1 DISPENSING POLICY

Citiva Medical Dispensing Facilities shall not be open or in operation unless an individual with an active New York State Pharmacist license, as defined in article 137 of the Education Law, is on the premises and directly supervising the activity within the facility. At all other times, the dispensing facility shall be closed and properly secured. Citiva Medical Dispensing Facilities shall not sell items other than approved medical marihuana products and related products necessary for the approved forms of administration of medical marihuana, without prior written approval from the New York State Department of Health. No approved medical marihuana products shall be vaporized or consumed on the premises of a dispensing facility, and no food or beverages shall be consumed by certified patients or designated caregivers on the premises of a dispensing facility, unless necessary for medical reasons.

Citiva Medical Dispensaries shall never dispense approved medical marihuana products to anyone

other than a certified patient or designated caregiver. When dispensing approved medical marihuana, Citiva Medical shall:

1. not dispense an amount greater than a 30 day supply to a certified patient, and not until the patient has exhausted all but a seven (7) day supply provided pursuant to any previously dispensed medical marihuana product by any Registered Organization;
2. ensure that medical marihuana product packaging shall not be opened by dispensing facility staff, and;
3. provide a patient-specific log on medical marihuana products (brand, administration from dosage, dates dispensed and any return of product) to the patient, the patient's designated caregiver, if applicable, or the patient's practitioner upon request.

Citiva Medical Dispensaries will store the medical marihuana product in a manner that ensures that there is no contamination or deterioration of the approved medical marihuana product or its packaging. If an approved medical marihuana product is returned to the Dispensing Facility, the Citiva Medical shall dispose of such product as per Citiva Medical's approved operating plan.

In addition, no person, except for a certified patient or designated caregiver, shall open or break the seal placed on an approved medical marihuana product packaged by Citiva Medical. No person associated with Citiva Medical shall enter into any agreement with a registered practitioner or healthcare facility concerning the provision of services or equipment that may adversely affect any person's freedom to choose the dispensing facility at which the certified patient or designated caregiver will purchase approved medical marihuana products. No approved medical marihuana product shall be sold, dispensed or distributed via a delivery service without prior written approval to Citiva Medical by the New York State Department of Health, except that a designated caregiver may deliver the approved medical marihuana product to the designated caregiver's certified patient. No employee of Citiva Medical shall counsel the certified patient or designated caregiver on the use, administration of, and the risks associated with approved medical marihuana products, unless the employee is a pharmacist with an active New York State license who has completed a course pursuant to section 1004.1 of the New York State Medical Marihuana Regulations, or the employee is under the direct supervision of, and in consultation with, the pharmacist on-site in the dispensing facility.

8.2 LABELING POLICY

Citiva Medical Dispensing Facilities shall affix to the approved medical marihuana product package a patient specific dispensing label approved by the New York State Department of Health, that is easily readable and firmly affixed and includes:

1. the name and registry identification number of the certified patient and designated caregiver, if any;
2. the certifying practitioner's name;
3. the dispensing facility name, address and phone number;
4. the dosing and administration instructions;
5. the quantity and date dispensed; and
6. any recommendation or limitation by the practitioner as to the use of medical marihuana.

Citiva Medical's Dispensing Facilities shall place the approved medical marihuana product in a plain

outer package when dispensing to the patient or designated caregiver. Citiva Medical will also include with each product package dispensed to a patient, a New York State Department of Health approved package safety insert. Information provided shall include but not be limited to:

1. the medical marihuana product and brand;
2. a list of any excipients used;
3. a warning if there is any potential for allergens in the medical marihuana product;
4. contraindications;
5. more specific dosage directions and instructions for administration;
6. warning of adverse effects and/or any potential dangers stemming from the use of medical marihuana;
7. instructions for reporting adverse effects as may be determined by the New York State Department of Health;
8. a warning about driving, operation of mechanical equipment, child care or making important decisions while under the influence of medical marihuana;
9. information on tolerance, dependence and withdrawal and substance abuse, how to recognize what may be problematic usage of medical marihuana and obtain appropriate services or treatment;
10. advice on how to keep the medical marihuana product secure;
11. language stating that the certified patient may not distribute any medical marihuana product to anyone else;
12. language stating that unwanted, excess, or contaminated medical marihuana product must be disposed of according to section 1004.20 of 10 New York Codes, Rules and Regulations; and
13. language stating that "this product has not been analyzed by the FDA. There is limited information on the side effects of using this product and there may be associated health risks."

8.3 VISITOR POLICY

At Citiva Medical, no person, except a Citiva Medical employee, shall be allowed on the premises of a dispensing facility without certified patient or designated caregiver registry identification card issued by the New York State Department of Health.

In the event that a person regularly not permitted on the premises of a Dispensing Facility, but has been authorized access by the New York State Department of Health, in writing, to enter the facility, must obtain a visitor identification badge from a Dispensing Facility employee prior to entering the dispensing facility. The visitor identification badge must be visible at all times. The Dispensing Facility shall require the visitor to return the identification badge to a dispensing facility employee upon exiting the Dispensing Facility.

At Citiva Medical, the Dispensaries will also maintain a visitor log, which shall include the name of the visitor, date, time and purpose of visit. The visitor log shall be available to the New Yolrk State Department of Health at all times during operating hours, and upon request. If an unforeseen circumstance requires the presence of a visitor and makes it impractical for the Dispensing Facility to obtain a waiver, for said visitor, the Dispensing Facility shall record in the visitor log, the name of the visitor, date, time and reasons for visit.

8.4 PRICING POLICY

When outlining Pricing Procedure and Policy, Citiva Medical adopts the definition of "Cost Analysis" as the review and evaluation of the separate cost elements and profit of a proposed price and the application of judgment to determine how well the proposed costs represent what the price per unit for approved medical marihuana products should be, assuming reasonable economy and efficiency, and "Price" as the cost to manufacture, market and distribute approved medical marihuana products plus a reasonable profit.

Citiva Medical will not distribute products or samples at no cost except as may be allowed by the Commissioner. Citiva Medical will only charge a price for an approved medical marihuana product that has been approved by the New York State Department of Health. Citiva Medical's pricing of approved medical marihuana products will be determined by the New York State Department of Health and will follow the following regulations:

1. Citiva Medical will submit a proposed price per unit for each form of medical marihuana indicated in this registration. Citiva Medical shall submit such information and documentation, in a manner and format determined by the New York State Department of Health, sufficient for the Department to perform a cost analysis of the proposed price. In particular, Citiva Medical shall, in a manner and format determined by the Department, provide a detailed breakdown of, and submit information and documentation concerning, all costs it factored to arrive at its proposed price, including but not limited to its fixed and variable costs such as materials and services; direct labor; and indirect costs;
2. Citiva Medical will provide cost or pricing data that is accurate and reliable, and shall certify, at the time of submission of its price proposal, that to the best of its knowledge and belief, the cost or pricing data were accurate, complete and current as of the date of submission;
3. Citiva Medical recognizes that the New York State Department of Health shall determine the reasonableness of the proposed costs. In making this determination, the Department may consider whether the costs represent inefficient and uneconomical practices; are not costs appropriately attributable to the price; and/or are costs unsupported by sufficient documentation or information to justify their inclusion in the proposed price. If Citiva Medical has been granted a renewal of its registration, any relevant historical price, cost and/or sales data of Citiva Medical; and any other information the commissioner deems appropriate, and;
4. Citiva Medical understands the Department may approve the proposed price, refuse approval of a proposed price, or modify or reduce the proposed price.
5. Citiva Medical will grant the Department or the Department's authorized representative the right to examine records that formed the basis for the proposed price, including Citiva Medical's books, records, documents and other types of factual information that will permit an adequate evaluation of the proposed price. If Citiva Medical recognizes that the cost or pricing data submitted is inaccurate, incomplete or noncurrent prior to the Department's approval of the price, Citiva Medical shall submit new data to correct the deficiency, or consider the inaccuracy, incompleteness, or non-currency of the data. Citiva Medical recognizes that the Department's approved price shall be in effect for the entire period of the Citiva Medical's registration; provided, however, that at the conclusion of the first year of the registration period, or prior to that time based upon documented exceptional circumstances, Citiva Medical may request that the price be modified based upon a material change in Citiva

Medical's costs. Citiva Medical shall fully support its request with sufficient information and documentation, in a manner and format determined by the Department, to justify its request. If the Department denies such request, Citiva Medical shall only charge prices previously approved by the Department. If the Department approves a price, Citiva Medical shall immediately notify the New York State Department of Health of any cost or pricing data submitted that it determines was inaccurate, incomplete, or noncurrent as of the date of the Department's approval of the price. If Citiva Medical provides such notice, or if the Department independently learns of such inaccurate, incomplete or noncurrent data, the Department may require Citiva Medical to provide new data to correct the deficiency, or consider the inaccuracy, incompleteness, or non-currency of the data. Citiva Medical understands the New York State Department of Health may perform audits, which may include site visits. Citiva Medical will provide reasonable access to the Department of its facilities, books and records.

8.5 MARKETING POLICY

Citiva Medical does not plan to begin marketing in any foreseeable future. In the event Citiva Medical looks to market, the company is prepared to market in full compliance with New York State Department of Health regulations. To ensure regulations are not breached, Citiva Medical is adopting the given restrictions into its own policy. All physical structures owned, leased or otherwise utilized by Citiva Medical, including any Dispensing Facility, shall:

1. Restrict external signage to a single sign, with only black and white colors;
2. Not illuminate, at any time, a sign advertising a marihuana product located on any physical structure;
3. Not advertise medical marihuana brand names or utilize graphics related to marihuana or paraphernalia on the exterior of the physical structures; and
4. Not display approved medical marihuana products and paraphernalia so as to be clearly visible from the exterior of a physical structure.

Citiva Medical firmly understand and affirms that an advertisement does not satisfy the requirement that it presents a "true and accurate statement" of information relating to effectiveness, side effects, consequences and contraindications if it fails to present a fair balance between information relating to effectiveness, side effects, consequences and contraindications in that the information relating to effectiveness is presented in greater scope, depth, or detail than is the information relating to side effects, consequences and contraindications, taking into account all implementing factors such as typography, layout, contrast, headlines, paragraphing, white space and any other techniques apt to achieve emphasis. Recognizing and being sure to represent the effectiveness of Citiva Medical products fairly and accurately will ensure we satisfy the "true and accurate statement" requirement. Citiva Medical also recognizes that an advertisement for any approved medical marihuana product shall not contain:

a. any statement that is false or misleading;
b. any statement that falsely disparages a competitor's products;
c. any statement, design, or representation, picture or illustration that is obscene or indecent;
d. any statement, design, representation, picture or illustration that encourages or

represents the use of marihuana for a condition other than a serious condition as defined in subdivision seven of section thirty-three hundred sixty of the public health law;

e. any statement, design, representation, picture or illustration that encourages or represents the recreational use of marihuana;

f. any statement, design, representation, picture or illustration related to the safety or efficacy of marihuana, unless supported by substantial evidence or substantial clinical data;

g. any statement, design, representation, picture or illustration portraying anyone under the age of 18, objects suggestive of the presence of anyone under the age of 18, or containing the use of a figure, symbol or language that is customarily associated with anyone under the age of 18;

h. any offer of a prize, award or inducement to a certified patient, designated caregiver or practitioner related to the purchase of marihuana or a certification for the use of marihuana; or

i. any statement that indicates or implies that the product or entity in the advertisement has been approved or endorsed by the commissioner, Department, New York State or any person or entity associated with New York State provided that this shall not preclude a factual statement that an entity is a registered organization.

Citiva Medical will submit any advertisement for an approved medical marihuana product to the Department at least 30 business days prior to the public dissemination of the advertisement. In addition, the submitter of the advertisement shall provide the following information to the Department:

1. A cover letter that:
   a) provides the following subject line: Medical marihuana advertisement review package for a proposed advertisement;
   b) provides a brief description of the format and expected distribution of the proposed advertisement; and
   c) provides the submitter's name, title, address, telephone number, fax number and email address;

2. An annotated summary of the proposed advertisement showing every claim being made in the advertisement and which references support for each claim;
3. Verification that a person identified in an advertisement as an actual patient or health care practitioner is an actual patient or healthcare practitioner and not a model or actor;
4. Verification that a spokesperson who is represented as an actual patient is indeed an actual patient;
5. Verification that an official translation of a foreign language advertisement is accurate;
6. Annotated references to support disease or epidemiology information, cross-referenced to the advertisement summary; and
7. A final copy of the advertisement, including a video where applicable, in a format acceptable to the Department.

Citiva Medical understands that if the above list is not followed, or other submission instructions, the submission will be considered incomplete. Citiva Medical also understand that no advertisement

may be disseminated if the submitter of the advertisement has received information that has not been widely publicized in medical literature that the use of any approved medical marihuana product may cause fatalities or serious damage to a patient. Citiva Medical, its officers, managers and employees shall not cooperate, directly or indirectly, in any advertising if such advertising has the purpose or effect of steering or influencing patient or caregiver choice with regard to the selection of a practitioner, or approved medical marihuana product. Citiva Medical recognizes that the New York State Department of Health of Health may:

1. Require a specific disclosure be made in the advertisement in a clear and conspicuous manner if the Department determines that the advertisement would be false or misleading without such a disclosure; or
2. Require that changes be made to the advertisement that are:
   a) necessary to protect the public health, safety and welfare; or
   b) consistent with dispensing information for the product under review.

8.6 RECORDS POLICY

Citiva Medical will keep an electronic record with the New York State Department of Health of all approved medical marihuana products that have been dispensed, utilizing a transmission format acceptable to the Department, not later than 24 hours after the marihuana was dispensed to the certified patient or designated caregiver. The information filed with the Department for each approved medical marihuana product dispensed shall include but not be limited to:

1. A serial number that will be generated by the Dispensing Facility for each approved medical marihuana product dispensed to the certified patient or designated caregiver;
2. An identification number which shall be populated by a number provided by the Department, to identify the registered organization's dispensing facility;
3. The patient name, date of birth and sex;
4. The patient address, including street, city, state, ZIP code;
5. The patient's registry identification card number;
6. If applicable, designated caregiver's name and registry identification card number;
7. The date the approved medical marihuana product was filled by the dispensing facility;
8. The metric quantity for the approved medical marihuana product;
9. The medical marihuana product drug code number, which shall be populated by a number provided by the Department, to represent the approved medical marihuana brand that was dispensed to the certified patient or designated caregiver, as applicable;
10. The number of days for which the supply has been dispensed;
11. The registered practitioner's Drug Enforcement Administration number;
12. The date the written certification was issued by the registered practitioner; and
13. The payment method.

When applicable, Citiva Medical shall file a zero report with the New York State Department of Health, in a format acceptable to the Department. A zero report shall mean a report that no approved medical marihuana product was dispensed by Citiva Medical during the relevant period of time. A zero report shall be submitted no later than 14 days following the most recent previously reported dispensing of an approved medical marihuana product or the submission of a prior zero report.

9 DISPENSARY

Citiva Medical will employ a knowledgeable and personable sales staff to enhance the experience and wellness of patients. Customer service and medicinal marihuana knowledge are values that will help patients obtain accurate and helpful information. Citiva Medical's professional staff will help educate patients and/or patient's caregiver about the type of medication their practitioner has recommended to treat their condition, and generate a high level of customer satisfaction. Regular training will be provided to the Citiva Medical staff.

9.1 PRODUCTS

Redacted Pursuant to N.Y. Public Officers Law, Art. 6

9.2 FACILITIES

Citiva Medical carefully chose the four (4) Dispensary sites based on geographical accessibility and the surrounding population. Citiva Medicine not only sought accessibility for patient convenience, but also for safe transportation and distribution. The four (4) locations were also chosen strategically to reach as many patients as possible, who are in need of approved medical marihuana products. The locations are:

Dispensary 1: 5788 East Circle Drive, Cicero, NY 13039
Distance from Manufacturing Facility – 62 Miles
Average Time from Manufacturing Facility – 1 hr 10 mins

Dispensary 2: 4 Hinchey Road, Rochester, NY 14624
Distance from Manufacturing Facility – 63.5 Miles

Average Time from Manufacturing Facility – 1 hr 9 mins

Dispensary 3: 2290 South Road, Poughkeepsie, NY 12601
Distance from Manufacturing Facility – 230 Miles
Average Time from Manufacturing Facility – 4 hr 10 mins

Dispensary 4: 35 1st Avenue, New York, NY 10003
Distance from Manufacturing Facility – 257 Miles
Average Time from Manufacturing Facility – 4 hr 45 mins

9.3 STAFF

9.3.1 STAFFING POLICY

With the utmost concentration on patient safety and satisfaction combined with product security and quality, Citiva Medical Dispensaries will have a fully-qualified staff of employees constantly managed by the Supervising Pharmacist/Dispensary Manager. During operation hours, there will be at least one Supervising Pharmacist/Dispensary Manager on-site, one (1) Patient Associate and [redacted] Security Officer. During Transport and Distribution, the additional Citiva Medical personnel, a Delivery Specialist and another Security Officer, will arrive and be present for a short time for the delivery of the approved medical marihuana products, as presented in Section Two of this Operating Plan.

9.3.2 TRAINING MODULES

All Citiva Medical Dispensary employees will, at the time of hire, attend a mandatory security and safety training program to be conducted by the Security Director or his/her designee. Such program will provide training aimed at personal safety and crime prevention techniques, and shall include, but not be limited to training in the following:

1. professional conduct, ethics and State and Federal laws regarding patient confidentiality;
2. proper use of security measures and controls that have been adopted by Citiva Medical;
3. specific procedural instructions for responding to an emergency, including a robbery or other violent incidents and/or accidents;
4. understanding the role of security officers of Citiva Medical Dispensaries, and understanding what role every member of the organization has in providing a safe and secure facility for patients, the public and fellow employees; and
5. situational training with respect to incidents involving patients, employees and/or other personnel of Citiva Medical on its premises, including but not limited to physical and/or verbal altercations, theft, unruly and/or threatening behavior, etc.

The training program curriculum will be developed by the Security Manager and presented to and adopted by the Board of Directors of Citiva Medical, and such curriculum shall be revised on a biannual basis.

Additional training will be presented monthly at both the Dispensaries and the Manufacturing Facility during scheduled staff meetings.

9.4 INVENTORY

9.4.1 MONTHLY INVENTORY PROCEDURES

1. The day before opening each Dispensary, and each month thereafter, a complete inventory of both useable and unusable approved medical marihuana products will be performed at each Citiva Medical Dispensary and logged into the State-selected Seed-to-Sale software system. All activities will be monitored by surveillance.
2. The Supervising Pharmacist/Dispensary Manager will inventory all products and sign an affidavit verifying the amount of each product, including:
   a. approved medical marihuana products;
   b. all sale items, such as Citiva Medical medicinal delivery devices.

The Chief of Dispensary Operations and Supervising Pharmacist/Dispensary Manager will also count all cash reserves, ensure accuracy and sign off before deposit.

9.4.2 INVENTORY DISCREPANCY PROCEDURES

If physical inventory counts do not match the inventory counts recorded in the State-selected Seed-to-Sale software system outside of a specified tolerance, Citiva Medical Management will conduct an internal audit and investigation. The Supervising Pharmacist/Dispensary Manager will document the incident in a report that includes the following information: the date, name of people involved, a description of the incident, identification of known or suspected causes of the event, and any corrective action taken. Pursuant to New York law, all such incidents will be reported to regulatory and/or law enforcement authorities. All discrepancies will be immediately reported to the Director of Security for review.

It is imperative that the cause of the discrepancy is determined. Inventory counts will be examined meticulously throughout the process noting any possible failures in the internal policies or potential shrinkage. A specific timeline of events and collection of documented evidence will be assembled in an attempt to understand and identify where the problem exists.

Once the cause of the problem has been determined, corrective actions will be implemented to prevent its recurrence. Every detail of the discrepancy will be precisely documented. All documents will be available to the Division.

9.4.3 LOSS OF INVENTORY BY THEFT OR DIVERSION

Inventory policies and procedures will be strictly followed. It is imperative that the cause of all discrepancies is determined. Inventory counts will be examined throughout the process to insure any possible failures in Citiva Medical's security and internal controls.

Citiva Medical will create a specific timeline of events and collect documented evidence in an attempt to understand the relationship of the contributory factors. A root cause analysis will be performed and all surveillance footage reviewed.

9.5 OPERATING HOURS

Citiva Medical Dispensaries will observe the following operating hours:

Monday - Friday	9:00 am - 7:00 pm
Saturday	10:00 am - 5:00 pm
Sunday	10:00 am - 4:00 pm

9.6 OPENING

9.6.1 DISPENSARY INVENTORY OPENING PROCEDURES

The Supervising Pharmacist/Dispensary Manager will implement and supervise the following opening procedures while under surveillance;

1. Print a copy of the Daily Inventory Report from the previous day;
2. Restock the cart from the vault according to the amount of product needed from the prior day's inventory report and input data into the State-selected Seed-to-Sale software system;
3. Prepare the cash register;
4. Move inventory from the vault to the Dispensary floor;
5. Supervise Patient Associates as items are moved from the cart to the display and inventory racks. Check amounts off the Daily Inventory Report. Request Patient Associate signature; and
6. Supervise stocking of all approved medical marihuana products, verifying quantities of the previous day's Daily Inventory report. Request Patient Associate Signature.

9.7 CLOSING

9.7.1 DISPENSARY INVENTORY CLOSING PROCEDURES

The Supervising Pharmacist/Dispensary Manager will monitor and supervise the following closing procedures while under surveillance:

1. Removal of carts from the vault after closing;
2. Move items from the dispensing shelves to the cart, writing the amounts on the Daily Inventory Report;
3. Supervise removal of cash from registers and place on cart, writing amounts on the Daily Inventory Report. Request sales employee signature;
4. Collect settlement report slips verifying "settlement successful" from credit card machines on the Dispensary;
5. Prepare cash drop;
6. Upon closing of the Dispensary, relocate all processed and unprocessed items to the vault. Complete the Dispensary Daily Inventory Report;
7. Secure the inventory cart in the vault;
8. Complete all lock down procedures for secured areas;
9. Complete all closing tasks; and

10. Clock-out at the time clock before departing.

9.7.2 PROCEDURES WHEN FACILITY IS CLOSED

Redacted Pursuant to N.Y. Public Officers Law, Art. 6

10 FACILITY ACCESS PLAN

10.1 ACCESS CONTROLS – LOCATIONS AND RESTRICTIONS

Redacted Pursuant to N.Y. Public Officers Law, Art. 6

10.2 SECURE STORAGE AND ACCESS

Redacted Pursuant to N.Y. Public Officers Law, Art. 6

Redacted Pursuant to N.Y. Public Officers Law, Art. 6

11 EQUIPMENT LIST

Citiva Medical's use of state-of-the-art electronic recordkeeping technologies helps keep our equipment to a minimum. That being said, computers and printers will be necessary for operations. A Department of Health approved safe will be located in each Citiva Medical Dispensary, in addition to lockboxes necessary for short-term storage of cash and receipts.

12 OUTREACH PLAN

12.1 SUSTAINABLE OUTREACH

By continually participating in and organizing community events, Citiva Medical expects to maintain strong ties and visibility within the community, and a great relationship with the State of New York. Scheduling guest speakers to talk on matters directly affecting our patients is one of the many ways we plan to reach our consumers.

12.2 PATIENT EDUCATION

Citiva Medical's patient education initiative is meant to open a dialogue with the patient community in order to improve patients' quality of life. An example of patient education outreach will be made through Citiva Medical's website, an image of which is attached as Exhibit 1. To achieve this educational outreach, we have secured the website address:

- www.CitivaMedical.com

Citiva Medical's site will offer an online portal that will allow patients to research their conditions and inform them about the latest research in medical marihuana treatment modalities. Citiva Medical will provide links to educational and informative sites sponsored by condition specific support groups and associations. This is a proven modality for patient communication in health care markets.

12.3 PRACTITIONER EDUCATION

This element of Citiva Medical's marketing program focuses on the identification of practitioners that treat conditions for which the medical use of marihuana is recognized in New York. Internationally, the scientific consensus is beginning to recognize and embrace the use of marihuana in the treatment of a range of conditions. In order to educate New York physicians, Citiva Medical will develop educational tools to provide the medical community with ongoing data regarding the various marihuana-based medicines and particular strains in the treatment of conditions.

12.4 COMMUNICATIONS

Citiva Medical may also retain a professional marketing and communications agency in order to ensure that accurate and helpful patient-focused information has a reasonable presence in healthcare public media. Citiva Medical intends to carefully monitor medical studies, research results and findings regarding cannabinoid-based medicines. Citiva Medical will utilize that information as the basis of various marketing communications, in order to further educate both our patients and the general public as to the medical use of marihuana products while fully complying with the State of New York regulations.

13 CHARITY CARE INITIATIVE

A core belief of the Citiva Medical LLC team is the principle that access to medical marihuana should not be hindered, due to a lack of economic means, particularly for families with children in need of medical marihuana to treat their conditions and illnesses. Because of that belief, upon approval at a Registered Organization, Citiva medical will be prepared to work with the New York State Department of Health to implement a charity care initiative that would ideally include the following components:

- Citiva Medical will donate a minimum of 2% of its net income to Strains of Hope, which is an IRS-registered, 501(c)(3) not-for-profit, "closed" charitable organization (meaning it will accept donations only from Citiva Medical and will not solicit donations). This amount shall be adjusted annually based on overall patient need.
- Strains of Hope will use these funds to pay for, in part or in full, medical marihuana treatment for any illness, for individuals who cannot afford to pay for their treatment, based on a standard to be developed in concert with the NYSDOH.
- Strains of Hope will use these funds to offer **free** medical marihuana treatments to any family whose income is less than 500% of the Federal Poverty Level (which, in 2015, equates to $121,250 for a family of four), and who have a child diagnosed with intractable pediatric epilepsy. As documented elsewhere in this application, one of the founders of Citiva, Joshua Stanley, is the co-creator of Charlotte's Web, a strain of medical marihuana that has shown great efficacy in treating pediatric epilepsy.

- Finally, Strains of Hope will use these funds to ensure geographic accessibility for all certified patients who cannot readily access a dispensing site, by reimbursing patients for transportation to and from dispensing sites via Access-A-Ride or a like transportation provider.
- Strains of Hope will also work with the NYSDOH to identify other opportunities to ensure equal access to care through economic support to persons of lesser means.

14 SECURITY MAINTENANCE AND PRACTICES

14.1 SECURITY SYSTEM MAINTENANCE AND SOUND PRACTICES

Redacted Pursuant to N.Y. Public Officers Law, Art. 6

14.2 TRANSPORT SECURITY AND OTHER POLICIES

Redacted Pursuant to N.Y. Public Officers Law, Art. 6

15 EXHIBITS

15.1 EXHIBIT 1 – IMAGES FROM THE CITIVA MEDICAL WEBSITE

CITIVA
212-257-3145
Cannabinoid Science in New York
Cannabinoid Science
Approved Conditions
CHILD ADVOCACY

CITIVA
212-257-3145
Endocannabinoid System in New York
Cannabinoid Science
Approved Conditions
CHILD ADVOCACY

CITIVA
212-257-3145
Dedication
Cannabinoid Science
Approved Conditions
CHILD ADVOCACY

15.2 EXHIBIT 2 – EXAMPLE LABELS

CAPSULE BLISTER PACK LABEL

Redacted Pursuant to N.Y. Public Officers Law, Art. 6

TINCTURE BOTTLE LABEL

Redacted Pursuant to N.Y. Public Officers Law, Art. 6

VAPORIZATION PEN BUTTERFLY LABEL

Redacted Pursuant to N.Y. Public Officers Law, Art. 6

VAPORIZATION PEN LABEL

Redacted pursuant to N.Y. Public Officers Law, Art. 6

Examples of the Citiva Medical package labels that will comply with New York State regulations.

PATIENT SPECIFIC DISPENSING LABEL

Redacted pursuant to N.Y. Public Officers Law, Art. 6

Example of Patient Specific Dispensing Label

15.3 EXHIBIT 3 – EXAMPLE PATIENT SAFETY INSERTS

Redacted pursuant to N.Y. Public Officers Law, Art. 6

Example Patient Safety Insert Materials for Citiva Medical brand and form (capsules) currently designated as [redacted]

Redacted pursuant to N.Y. Public Officers Law, Art. 6

Example Patient Safety Insert Materials for Citiva Medical brand and form (vaporization oil) currently designated as [redacted]

Redacted pursuant to N.Y. Public Officers Law, Art. 6

Example Patient Safety Insert Materials for Citiva Medical brand and form (tincture) currently designated as [redacted]

15.4 EXHIBIT 4 – EXAMPLE SPECIFICATION SHEETS

Redacted Pursuant to N.Y. Public Officers Law, Art. 6

Redacted Pursuant to N.Y. Public Officers Law, Art. 6

CITIVA MEDICAL LLC

MEDICAL MARIHUANA PROGRAM

ATTACHMENT D

OPERATING PLAN – SECTION 4 – Devices

CITIVA MEDICAL LLC

MEDICAL MARIHUANA PROGRAM

ATTACHMENT D

OPERATING PLAN – SECTION 4 – Devices

SECTION 4

Devices

Citiva Medical LLC

1 TABLE OF CONTENTS

2 OVERARCHING DESCRIPTION 2
2.1 INTRODUCTION 2
2.2 DEFINITIONS 2
3 DETAILED DESCRIPTIONS OF DEVICES 3
3.1 DEVICE FOR DELIVERY OF VAPORIZATION OIL 3
3.1.1 WHAT IS THE VAPORIZATION OIL DELIVERY DEVICE? 3
3.1.2 PACKAGING OF VAPORIZATION OIL AT THE MANUFACTURING FACILITY INTO THE VAPE PEN 3
3.1.3 HOW DOES A VAPE PEN WORK? 4
3.1.4 PHOTOS OF THE VAPE PEN 5
3.2 DEVICE FOR DELIVERY OF A TINCTURE 6
3.2.1 WHAT IS THE TINCTURE DELIVERY DEVICE? 6
3.2.2 PACKAGING OF TINCTURE AT THE MANUFACTURING FACILITY INTO THE BOTTLES 6
3.2.3 HOW DOES THE TINCTURE BOTTLE AND DROPPER WORK? 7
3.2.4 PHOTOS OF THE TINCTURE BOTTLES 8
3.3 DEVICE FOR DELIVERY OF A CAPSULE 8
3.3.1 WHAT IS THE CAPSULE DELIVERY DEVICE? 8
3.3.2 PACKAGING OF CAPSULES BOTTLES 8
3.3.3 HOW DOES THE CAPSULE WORK? 9
3.3.4 PHOTOS OF THE CAPSULES 10
4 ITEMS FOR SALE OR OFFER 10

2 OVERARCHING DESCRIPTION

2.1 INTRODUCTION

Citiva Medical's first commitment has always been, and always will be, to the patient. This means that the products Citiva Medical produces for its patients will always be of the highest quality. The plants, the intermediate products, and the final approved medical marihuana products are tested by Citiva's Quality Control process at each step in the manufacturing process to ensure the safety, purity, and potency of the final brand and form. To ensure our approved medical marihuana is of the highest standard and that dispensary operations run smoothly, it is imperative that Citiva Medical deliver its product forms in devices that the certified patients, caregivers, and practitioners will find comfortable and pleasant to use and administer.

All certified patients are ill with very serious conditions, as recognized by the State of New York. Citiva Medical takes this very seriously and has considered this in the selection of the delivery devices for its forms of approved medical marihuana products. Once the patients receive their certifications, they or their caregivers will need forms and devices that they can use to administer the correct dosage quickly and easily. These devices must be easy to use and minimize, or even eliminate, the opportunity for mistakes, abuse, diversion, or other illegal or unauthorized activity. Citiva Medical has a strong commitment to provide devices with its approved medical marihuana products that are compliant with regulations of the State of New York and that will alleviate the suffering of its certified patients.

Citiva Medical strictly follows the Regulations of the State of New York (1004.11)(a)(3) of 10 New York Codes, Rules and Regulations and will provide a set of three (3) forms for its brands, to be approved by the Commissioner. These forms will refer to the final preparation an approved medical marihuana brand that will be available for sale to certified patients. The three (3) forms and associated types of devices that Citiva Medical will offer are:

- ✓ Vaporization oil administered through "Vape Pens" for inhalation;
- ✓ Tincture emulsion administered through sublingual administration from a bottle and special dropper system; and
- ✓ Encapsulated powder administered in "#1"-sized capsules to swallow

2.2 DEFINITIONS

Approved medical marihuana product – the final manufactured product delivered to the patient that represents a specific brand with a defined cannabinoid content and active and inactive ingredients, prepared in a specific dosage and form, to be administered as recommended by the practitioner.

Brand – a defined medical marihuana extraction product that has a homogenous and uniform cannabinoid concentration and product quality, produced according to an approved and stable processing protocol. The specified brand shall have a total THC and total CBD concentration that is within 95 – 105% of that specified in milligrams per dose for that brand and shall have the same composition and concentration of inactive ingredients as that defined for the brand.

Form – a type of a medical marihuana product approved by the Commissioner and shall refer to the final preparation of an approved medical marihuana brand; for example, an extract in oil for sublingual administration, an extract for vaporization or an extract in a capsule for ingestion.

3 DETAILED DESCRIPTIONS OF DEVICES

3.1 DEVICE FOR DELIVERY OF VAPORIZATION OIL

3.1.1 WHAT IS THE VAPORIZATION OIL DELIVERY DEVICE?

The Vaporization Oil will be administered with a small, pocket-sized vaporization device commonly known as a "Vape Pen." The technology for the Vape Pen evolved from concepts in which a liquid or oil is heated just to the point of vaporization and not high enough for combustion to take place. This vaporization temperature is usually several hundred degrees lower that the combustion temperature. As result, the vapor that is created is not altered chemically, as it is gently warmed and goes from the liquid state to the vapor state with only the phase-change of the material happening – not chemical changes. This means that in the Vape Pen, the approved medical marihuana product is available to the patient for inhalation in its fully potent and unaltered form, delivering the expected dosage of THC and CBD.

Vaporization Oil delivered through a Vaporization device, known as the "Vape Pen," has become a leading mode of delivery of approved medical marihuana in the regulated environments in other states in which medical marihuana is legal. Citiva Medical has the experience and the expertise to manufacture and deliver the Vape Pens to the certified patients in the State of New York.

3.1.2 PACKAGING OF VAPORIZATION OIL AT THE MANUFACTURING FACILITY INTO THE VAPE PEN

1. Vaporization oil with defined THC and CBD content is dispensed into 1 mL cartridge and assembled.
2. Assembled cartridge is sealed such that it is child-resistant, tamper-proof/tamper-evident, light-resistant, and in a resealable package that minimizes oxygen exposure.
3. Label is affixed that identifies the lot of approved medical marihuana product with a lot unique identifier.
4. The label will have previously been approved by the department prior to use. The product label will be applied at the Manufacturing Facility, be easily readable, firmly affixed and include the following information:
    a. the medical marihuana product form and brand designation;
    b. the single dose THC and CBD content for the product set forth in milligrams (mg);
    c. the medical marihuana product lot unique identifier (lot number or bar code);
    d. the quantity included in the package;
    e. the date packaged;
    f. the date of expiration of the product;
    g. the proper storage conditions;
    h. language stating:

i. "Medical marihuana products must be kept in the original container in which they were dispensed and removed from the original container only when ready for use by the certified patient";
ii. "Keep secured at all times";
iii. "May not be resold or transferred to another person";
iv. "This product might impair the ability to drive";
v. "KEEP THIS PRODUCT AWAY FROM CHILDREN (unless medical marihuana product is being given to the child under a practitioner's care"); and
vi. "This product is for medicinal use only. Women should not consume during pregnancy or while breastfeeding except on the advice of the certifying practitioner, and in the case of breastfeeding mothers, including the infant's pediatrician."

5. Packages are placed in a shipping case and a tamper evident seal is affixed for Transport and Distribution to Dispensary.
6. Samples are tested according to Quality Control process and Current Good Manufacturing Processes (cGMP) and a statistically significant number of samples are retained for testing and future testing needs.
7. The retained samples for testing will be stored in the environmentally control secure storage area for future quality testing at an approved laboratory or for adverse event investigations, by the department.

3.1.3 HOW DOES A VAPE PEN WORK?

The Vape Pen consists of three (3) main parts:

- Mouthpiece;
- Oil Cartridge with built-in heater; and
- Battery

The mouthpiece is a simple molded unit that resembles the mouthpiece of an old-fashioned cigarette holder, or even some small musical wind instruments. It is placed at the lips, with lips pursed around the mouthpiece and air, and vapor, is drawn through it and into the lungs by drawing a small breath through it.

The Oil Cartridge contains the oil/extract that is the specific form and brand of the approved medical marihuana product. It is filled in the manufacturing facility according to the stringent guidelines of Quality Assurance, Quality Control and Current Good Manufacturing Processes (CGMP). The small heater vaporization unit, with its tiny wire heating element, is an integral part of the assembly. The cartridge is also engineered with the appropriate air inlets and interior channel structure to allow medicinal vapor to mix with drawn-in air to allow the medicinal vapor to be delivered with the drawn breath of the patient.

The tiny wire heating element is in contact with the oil at the base of the cartridge. The heating element is only activated when a breath is drawn through the mouthpiece. At the time the breath is drawn, the tiny wire heating element heats to the point of vaporizing the oil/extract in contact with it. That vapor is mixed with air that passes into the unit with the drawn breath. The vapor/air mixture

flows through the flow channels built into the cartridge so that the vapor/air mixture flows into the patient with the breath. The approved medical marihuana brand is delivered to the patient in a single drawn-in breath through the Vape Pen.

The battery supplies the power to the tiny wire heating element in a measured and controlled manner that allows just enough heat to vaporize the oil/extract in contact with the heating element. Energy flows from the battery when a breath is drawn on the Vape Pen to heat the tiny wire heating element to vaporize the oil/extract in the cartridge. The battery is sized to allow completed use and planned dosages from the entire cartridge of product, with additional margin.

After receiving the Vape Pen from the Dispensary, the patient or caregiver follows the dosage and instructions supplied by the practitioner, pharmacist, and patient safety inserts. In general, usage will be as follows:

1. Note the dose prescribed by the practitioner.
2. Note that the unit-dose breath "draw in" prescribed by the practitioner will be described by the practitioner to ensure one-unit dose is provided to the certified patient.
3. Take the prescribed unit-dose breath through the Vape Pen, in a manner similar to drawing in a breath through a straw.
4. Dosage is now complete.
5. Put Vape Pen away in secure location.

3.1.4 PHOTOS OF THE VAPE PEN

Figure 1: Example of the Citiva Medical Vaporization Oil Device, known as the "Vape Pen." The small size, similar to a ballpoint pen, provides for easy transport by the certified patients and caregivers.

Figure 2: Example of the unassembled Vape Pen: mouthpiece, oil cartridge with built-in heating element, and fully-contained battery that provides power to the heating element for the vaporization.

3.2 DEVICE FOR DELIVERY OF A TINCTURE

3.2.1 WHAT IS THE TINCTURE DELIVERY DEVICE?

Tinctures are delivered in a light-resistant one-(1)-ounce bottle with a calibrated dropper system. Tinctures are prepared at the Citiva Manufacturing Facility based on the oils extracted from the medical marihuana plants. Once the high-grade finished oil is produced, it can be prepared into a Tincture – an emulsified liquid. The Tincture is delivered from a calibrated dropper system that allows controlled doses. The approved medical marihuana product is contained in a light-resistant bottle. The calibrated dropper system and the bottle are the delivery device for this form of approved medical marihuana product. The appropriate, measured dose is administered sub-lingually, that is to say, a measured dose is dropped from the calibrated dropper, in a liquid form, under the tongue of the patient. It is absorbed into the body through the tissues under the tongue.

3.2.2 PACKAGING OF TINCTURE AT THE MANUFACTURING FACILITY INTO THE BOTTLES

1. Incoming bottles are washed and dried in a food-safe bottle washer.
2. Finished Tincture Oil-in-Water Emulsion is dispensed into sterile one-ounce bottle that is child-resistant, tamper-proof/tamper-evident, light-resistant, and in a resealable package that minimizes oxygen exposure.
3. Child-resistant dropper assembly with graduated markings is mated to the one-(1)-ounce filled resealable bottle that is child-resistant, tamper-proof/tamper-evident, light-resistant, and in a resealable package that minimizes oxygen exposure.
4. Label is affixed that identifies the lot of approved medical marihuana product with a lot unique identifier.

5. The label will have previously been approved by the department prior to use. The product label will be applied at the Manufacturing Facility, be easily readable, firmly affixed and include the following information:

    a. the medical marihuana product form and brand designation;
    b. the single dose THC and CBD content for the product set forth in milligrams (mg);
    c. the medical marihuana product lot unique identifier (lot number or bar code);
    d. the quantity included in the package;
    e. the date packaged;
    f. the date of expiration of the product;
    g. the proper storage conditions;
    h. language stating:
        i. "Medical marihuana products must be kept in the original container in which they were dispensed and removed from the original container only when ready for use by the certified patient";
        ii. "Keep secured at all times";
        iii. "May not be resold or transferred to another person";
        iv. "This product might impair the ability to drive";
        v. "KEEP THIS PRODUCT AWAY FROM CHILDREN (unless medical marihuana product is being given to the child under a practitioner's care"); and
        vi. "This product is for medicinal use only. Women should not consume during pregnancy or while breastfeeding except on the advice of the certifying practitioner, and in the case of breastfeeding mothers, including the infant's pediatrician."

6. Packages are placed in a shipping case and a tamper evident seal is affixed for Transport and Distribution to Dispensary.
7. Samples are tested according to Quality Control process and Current Good Manufacturing Processes (cGMP) and a statistically significant number of samples are retained for testing and future testing needs.
8. The retained samples for testing will be stored in the environmentally control secure storage area for future quality testing at an approved laboratory or for adverse event investigations, by the department.

3.2.3 HOW DOES THE TINCTURE BOTTLE AND DROPPER WORK?

After receiving the Tincture Bottle and Dropper, the patient or caregiver follows the dosage and instructions supplied by the practitioner, pharmacist and patient safety inserts. In general, usage will be as follows:

1. Note the dose prescribed by the practitioner.
2. That dose will be the unit-dose described by the practitioner for the certified patient.
3. Remove the calibrated dropper from its package.
4. Note the dosage markings on the side of the dropper.
5. Determine the correct fill-line marking on the dropper.
6. Open the tincture bottle.
7. Squeeze the air out of the bulb of the dropper by using pressure of the fingers on the bulb

8. Insert the dropper into the tincture.
9. Fill dropper by allowing liquid to entire the dropper by releasing the pressure of fingers on the bulb of the dropper.
10. When the liquid has entered the dropper to the exact dosage line, remove the dropper.
11. It is now ready to give to the patient, sublingually.
12. After administration, dosage is complete.
13. Close the bottle and put away in secure location.
14. After the patient has received the dose, wash and disinfect the dropper, if it is for multiple uses, or wash and throw away if it is a single use dropper.

3.2.4 Photos of the Tincture Bottles

Figure 3: Example of a light resistant one-ounce tincture bottle.

3.3 DEVICE FOR DELIVERY OF A CAPSULE

3.3.1 WHAT IS THE CAPSULE DELIVERY DEVICE?

Capsules are a traditional form of delivery for drugs. They are a time-honored system for quickly and easily ingesting medicines. Citiva Medical will prepare powdered extracts at it Manufacturing Facility that will be used to make powder-filled industry-standardized #1-sized capsules. #1-sized capsules hold approximately 400 mg of powdered extract materials (depending on actual density of the powered extract). The capsules are 0.654” long and 0.261” in diameter. These capsules will be placed into a sealed bottle for delivery to the patient.

3.3.2 PACKAGING OF CAPSULES BOTTLES

1. Finished powdered-extract (P.E.) is filled into a “1” sized capsule.
2. Capsules are placed into a blister pack, or other packaging, as determined by the New York State Department of Health.

3. Vaporization oil with defined THC and CBD content is dispensed into 1 mL cartridge and assembled.
4. Assembled cartridge is sealed such that it is child-resistant, tamper-proof/tamper-evident, light-resistant, and in a resealable package that minimizes oxygen exposure.
5. Label is affixed that identifies the lot of approved medical marihuana product with a lot unique identifier.
6. The label will have previously been approved by the department prior to use. The product label will be applied at the Manufacturing Facility, be easily readable, firmly affixed and include the following information:
    a. the medical marihuana product form and brand designation;
    b. the single dose THC and CBD content for the product set forth in milligrams (mg);
    c. the medical marihuana product lot unique identifier (lot number or bar code);
    d. the quantity included in the package;
    e. the date packaged;
    f. the date of expiration of the product;
    g. the proper storage conditions;
    h. language stating:
        i. "Medical marihuana products must be kept in the original container in which they were dispensed and removed from the original container only when ready for use by the certified patient";
        ii. "Keep secured at all times";
        iii. "May not be resold or transferred to another person";
        iv. "This product might impair the ability to drive";
        v. "KEEP THIS PRODUCT AWAY FROM CHILDREN (unless medical marihuana product is being given to the child under a practitioner's care"); and
        vi. "This product is for medicinal use only. Women should not consume during pregnancy or while breastfeeding except on the advice of the certifying practitioner, and in the case of breastfeeding mothers, including the infant's pediatrician."

7. Packages are placed in a shipping case and a tamper evident seal is affixed for Transport and Distribution to Dispensary.
8. Samples are tested according to Quality Control process and Current Good Manufacturing Processes (cGMP) and a statistically significant number of samples are retained for testing and future testing needs.
9. The retained samples for testing will be stored in the environmentally control secure storage area for future quality testing at an approved laboratory or for adverse event investigations, by the department.

3.3.3 HOW DOES THE CAPSULE WORK?

After receiving the bottle of capsules from the Dispensary, the patient or caregiver follows the dosage and instructions supplied by the practitioner, pharmacist, and patient safety inserts. In general, usage will be as follows:

1. Note the unit-dose prescribed by the practitioner
2. Take out unit-dose from the blister pack or prescribed dose

3. Have drink or water ready
4. Place capsule in mouth and immediately take drink and swallow both capsule and drink together
5. Dosage is now complete
6. Put bottle away in secure location

3.3.4 PHOTOS OF THE CAPSULES

Figure 4: Example photo of capsules ready to be placed into the bottle.

4 ITEMS FOR SALE OR OFFER

Batteries will be available for sale to accompany Vape Pens.

CITIVA MEDICAL LLC

MEDICAL MARIHUANA PROGRAM

ATTACHMENT D

OPERATING PLAN – SECTION 5 – Security and Control

SECTION 5

Security and Control

Citiva Medical LLC

Table of Contents

5.1 OVERARCHING DESCRIPTION AND APPROACH OF SECURITY AND CONTROL....2
5.1.1 SECURITY AND CONTROL OVERVIEW: MANUFACTURING....2
5.1.2 SECURITY AND CONTROL OVERVIEW: TRANSPORT AND DISTRIBUTION....3
5.1.3 SECURITY AND CONTROL OVERVIEW: DISPENSARIES....3
5.2 ORGANIZATION CHART....4
5.3 JOB DESCRIPTIONS....4
5.3.1 DIRECTOR OF SECURITY....4
5.3.2 SECURITY SUPERVISOR....6
5.3.3 SECURITY OFFICER (DISPENSARY)....8
5.3.4 SECURITY OFFICER (MANUFACTURING FACILITY/ MAIN ENTRANCE)....8
5.3.5 SECURITY OFFICER (MANUFACTURING FACILITY/ BUILDING 1)....8
5.3.6 SECURITY OFFICER (MANUFACTURING FACILITY/ BUILDING 2)....8
5.3.7 SECURITY OFFICER (MANUFACTURING FACILITY/ BUILDING 2/ ALTERNATE ENTRANCE)…….…….. 8
5.3.8 SECURITY OFFICER (MANUFACTURING FACILITY/ PATROL)…..…8
5.3.9 SECURITY OFFICER (LOGISTICS/DELIVERY)……..…9
5.4 DESCRIPTION OF ACTIVITIES FOR SECURITY……9
5.4.1 OVERVIEW OF ACTIVITIES…….9
5.5 FLOW DIAGRAM……...11
5.6 POLICIES AND PROCEDURES……11
5.6.1 OVERVIEW OF SECURITY POLICIES AND PROCEDURES BY LOCATION…….11
5.6.1.1 OVERVIEW OF SECURITY POLICIES AND PROCEDURES FOR MANUFACTURING FACILITY……...12
5.6.1.2 OVERVIEW OF SECURITY POLICIES AND PROCEDURES FOR TRANSPORTATION 12
5.6.1.3 OVERVIEW OF SECURITY POLICIES AND PROCEDURES FOR DISPENSARIES……..13
5.6.2 NOTEBOOKS, LOGS AND INCIDENT REPORTS……13
5.6.3 SECURITY COVERAGE……...14
5.6.4 SPECIFIC POST RESPONSIBILITIES…….14
5.6.5 IDENTIFICATION CHECKS……...……15
5.6.6 SIGN IN/OUT PROCEDURES…..……15
5.6.6.1 EMPLOYEES…….....16
5.6.6.2 EMPLOYEES WITHOUT PROPER ID……..16
5.6.6.3 LOST OR STOLEN ID BADGES……...16
5.6.6.4 TERMINATED EMPLOYEE BADGES…….……16
5.6.7 VISITORS…….....17
5.6.8 PERSONAL VISITORS…….……..…...17
5.6.9 CONTRACTORS…….....17

5.6.10 DELIVERIES…….....18
5.6.11 PROPERTY AND EQUIPMENT REMOVAL PROCEDURE…….18
5.6.12 PACKAGE INSPECTION……..18
5.6.12.1 CITIVA MEDICAL'S PROPERTY……..18
5.6.12.2 PERSONAL PROPERTY (PERSONAL PACKAGES.....19
5.6.13 CARD ACCESS…….....19
5.6.14 PATROL PROCEDURES……...20
5.6.14.1 FIXED POST PATROL……20
5.6.14.2 OPENING AND CLOSING PATROL…….20
5.6.14.3 MONITORED PATROL (WANT TOUR PATROL).....20
5.6.14.4 UNMONITORED PATROL……20
5.6.15 EMERGENCY RESPONSE PROCEDURES……21
5.6.15.1 FIRE ALARM RESPONSE PROCEDURE…….……21
5.6.15.2 FIRE SPRINKLER SYSTEM……..21
5.6.15.3 FIRE ALARM RESPONSE PROCEDURE.....22
5.6.16 EVACUATION PROCEDURE.....22
5.6.16.1 EVACUATION PROCEDURE.....22
5.6.16.2 GENERAL GUIDELINES.....23
5.6.16.3 RESPONSIBILITIES OF DIRECTOR OF SECURITY AND SECURITY OFFICERS……...23
5.6.16.4 ALERTING OR SIGNALING BUILDING OCCUPANTS IN CASE OF FIRE OR OTHER EMERGENCY.....24
5.6.16.5 EVACUATION PROCEDURES FOR BUILDING OCCUPANTS……...24
5.6.16.5 DISABLED OCCUPANTS…….....25
5.6.16.7 CRITICAL OPERATIONS SHUTDOWN.....25
5.6.16.8 ACCOUNTABILITY PROCEDURES FOR EMERGENCY EVACUATION……26
5.6.16.9 RESCUE AND MEDICAL DUTIES……...26
5.6.17 SECURITY SUPERVISOR RESPONSBILITIES…….....26
5.6.17.1 OPERATION MANAGEMENT.....26
5.6.17.2 COMMUNICATION MANAGEMENT.....27
5.6.17.3 ADMINISTRATIVE MANAGEMENT.....28
5.6.18 SECURITY OFFICER - MANUFACTURING FACILITY PATROL, RESPONSIBILITIES……28
5.6.19 GENERAL ORDERS FOR SECURITY OFFICERS.....29
5.6.19.1 REPORTING FOR DUTY……...30
5.6.19.2 REPORTING OFF DUTY……30
5.6.19.3 ABSENCE AND TARDINESS……30
5.6.19.4 PERSONAL APPEARANCE AND CONDUCT.....31
5.7 SECURITY EQUIPMENT…….....31
5.7.1 OVERVIEW OF SECURITY EQUIPMENT.....31
5.7.2 MANUFACTURING FACILITY SECURITY EQUIPMENT.....32
5.7.2.1 FENCING.....32
5.7.2.2 LIGHTING.....32
5.7.2.3 ALARM SYSTEM.....32

5.7.2.4 CCTV SURVEILLANCE SYSTEM.....33
5.7.2.5 VAULTS.....33
5.7.2.6 ACCESS TECHNOLOGY.....34
5.7.3 TRANSPORTATION SECURITY EQUIPMENT.....34
5.7.3.1 SECURE TRANSPORT VAN.....34
5.7.4 DISPENSARY SECURITY EQUIPMENT.....34
5.7.4.1 ALARM SYSTEM.....34
5.7.4.2 CCTV SURVEILLANCE SYSTEM.....35
5.7.4.3 VAULTS.....36
5.7.4.4 ACCESS TECHNOLOGY.....36

5.1 OVERREACHING DESCRIPTION AND APPROACH OF SECURITY AND CONTROL

Citiva Medical is dedicated to security and control to ensure that all New York State laws and regulations are enforced in all of its facilities and operations. Citiva Medical's state-of-the-art security approach has been created to ensure that the patients of New York receive safe, quality-tested approved medical marihuana products in a timely manner. The security and safety of our personnel, products and facilities is of paramount importance in all we do. Citiva Medical has developed a multilayered and overlapping security system to protect the facilities and the processes to manufacture, transport, and dispense approved medical marihuana products. We will work with local law enforcement to enhance security and control at each Citiva Medical location. Citiva Medical has established policies and procedures for security and control that will prevent diversion, abuse, and other illegal or unauthorized conduct.

Redacted Pursuant to N.Y. Public Officers Law, Art. 6

5.1.1 SECURITY AND CONTROL OVERVIEW: MANUFACTURING

Redacted Pursuant to N.Y. Public Officers Law, Art. 6

Redacted Pursuant to N.Y. Public Officers Law, Art. 6

5.1.2 SECURITY AND CONTROL OVERVIEW: TRANSPORT AND DISTRIBUTION

Redacted Pursuant to N.Y. Public Officers Law, Art. 6

5.1.3 SECURITY AND CONTROL OVERVIEW: DISPENSARIES

Redacted Pursuant to N.Y. Public Officers Law, Art. 6

Redacted Pursuant to N.Y. Public Officers Law, Art. 6

5.2 ORGANIZATION CHART

Redacted Pursuant to N.Y. Public Officers Law, Art. 6

5.3 JOB DESCRIPTIONS

5.3.1 DIRECTOR OF SECURITY

The Director of Security of Citiva Medical will perform and/or comply with, or will ensure that site supervisors and shift supervisors (as applicable and appropriate with respect to the business operation's general size and staffing needs), the following duties, obligations and responsibilities:

a. **OPERATIONAL MANAGEMENT**

(i) Safety

Develop/maintain safety programs outlining site-specific hazards for Security Officers, including vehicle safety and driving safety.

(ii) Operational Procedures

Develop/maintain/review operational procedures so that a valid site specific

operational procedures manual and post orders are always available for emergency reference by the security staff.

(iii) Security Officer Training
Provide site specific initial on-the-job training to each Security Officer.

(iv) Uniforms
Maintain uniform and appearance standards as outlined in the Security Officer handbook.
Forward any uniform requisitions to the Director of Security or the Uniform Department.

(v) Overtime
Identify and maintain adequate staffing levels to minimize/eliminate overtime.

(vi) Scheduling
Meet all scheduled hours.
Provide a yearly vacation schedule for the security staff in order to plan for vacation coverage.

(vii) Policies
Enforce Citiva Medical's security policies as outlined by the Security Officer Handbook and operational procedures manual.

(viii) Standards & Audit Compliance
Meet and exceed operational audit standards.

(ix) Equipment
Identify security equipment utilized at the facility, including vehicles, and maintain appropriate shift inventory and maintenance checklists/follow-up.

b. **COMMUNICATIONS MANAGEMENT**

(i) Security Officer Performance Evaluations
Objectively evaluate Officers every six (6) months in a face-to-face meeting.

(ii) Recognition
Observe, note and commend solid and top performers.

(iii) Counseling
Review substandard performance with employees face-to-face, and provide coaching and training to improve performance.
Document counseling, training and coaching.

(iv) Disciplinary Actions
Enforce Citiva Medical's standards.

(v) Communication with Management

Meet with and listen to management, taking a proactive approach.
Report lost/stolen ID badges to management.
Ensure that badges of terminated employees are turned in to security in order to be forwarded to management.
Report all incidents to management.

5.3.2 SECURITY SUPERVISOR

SAFETY:

- Develop/maintain safety programs outlining site-specific hazards for Security Officers, including vehicle safety, driving safety.

OPERATIONAL PROCEDURES:

- Develop/maintain/review operational procedures so that a valid site specific operational procedures manual and post orders are always available for emergency reference by the security staff.

SECURITY OFFICER TRAINING:

- Provide site specific initial on-the-job training for each Security Officer.

UNIFORMS:

- Maintain uniform and appearance standards as outlined in the Security Officer handbook.
- Forward any uniform requisitions to the Director of Security or the Uniform Department.

OVERTIME:

- Identify and maintain adequate staffing levels to minimize/eliminate overtime.

SCHEDULING:

- Meet all contractually scheduled hours.
- Provide a yearly vacation schedule for the security staff in order to plan for vacation coverage.

POLICIES:

- Enforce Citiva Medical Policies as outlined by the Security Officer Handbook and operational procedures manual.

STANDARDS & AUDIT COMPLIANCE:

- Meet and exceed operational audit standards.

EQUIPMENT:

- Identify equipment utilized at the account, including vehicles, and maintain appropriate shift inventory and maintenance checklists/follow-up.

COMMUNICATIONS MANAGEMENT:
SECURITY OFFICER PERFORMANCE EVALUATIONS:

- Objectively evaluate Officers every six (6) months in a face-to-face meeting.

RECOGNITION:

- Observe, note and commend solid and top performers.

COUNSELING:

- Review substandard performance with employees face-to-face, and provide coaching and training to increase performance.
- Document counseling, training and coaching.

DISCIPLINARY ACTIONS:

- Enforce Citiva Medical standards as outlined in the Citiva Medical Handbook.

CLIENT COMMUNICATIONS:

- Meet with and listen to management, taking a proactive approach.
- Report lost/stolen ID badges to the management.
- Ensure that the badges of terminated employees are turned in to security in order to be forwarded to the management.
- Report all incidents to the management.

ACCOUNTS:

- Be responsible for assigned accounts/Security Officers seven (7) days a week.

ADMINISTRATIVE MANAGEMENT:
LOGS:

- Review all security logs, tours and reconcile against shift responsibilities, post orders, monitored and unmonitored patrols.
- Review building employee registers, identify employees who fail to use their ID cards, and submit a report to management for action.

INCIDENT REPORTS:

- Review all incident reports prior to submitting to management.
- Distribute copies to management and Director of Security.

TRAINING:

- Submit complete and accurate training documentation: on-the-job checklists and retraining follow-ups with agendas.

FINANCIAL:

- Prepare time-sheets and submit them to the Director of Security for payroll purposes
- To be determined as needs of each site require.

All other duties as assigned.

Redacted Pursuant to N.Y. Public Officers Law, Art. 6

5.4 DESCRIPTION OF ACTIVITIES FOR SECURITY

Redacted Pursuant to N.Y. Public Officers Law, Art. 6

Redacted Pursuant to N.Y. Public Officers Law, Art. 6

5.5 FLOW DIAGRAM

Redacted Pursuant to N.Y. Public Officers Law, Art. 6

5.6 POLICIES AND PROCEDURES

Redacted Pursuant to N.Y. Public Officers Law, Art. 6

Redacted Pursuant to N.Y. Public Officers Law, Art. 6

5.6.1.2 OVERVIEW OF SECURITY POLICIES AND PROCEDURES FOR TRANSPORTATION

Redacted Pursuant to N.Y. Public Officers Law, Art. 6

Redacted Pursuant to N.Y. Public Officers Law, Art. 6

5.6.1.3 OVERVIEW OF SECURITY POLICIES AND PROCEDURES FOR DISPENSARIES

Redacted Pursuant to N.Y. Public Officers Law, Art. 6

5.6.2 NOTEBOOKS, LOGS AND INCIDENT REPORTS

Redacted Pursuant to N.Y. Public Officers Law, Art. 6

Redacted Pursuant to N.Y. Public Officers Law, Art. 6

5.6.4 SPECIFIC POST RESPONSIBILITIES

Redacted Pursuant to N.Y. Public Officers Law, Art. 6

Redacted Pursuant to N.Y. Public Officers Law, Art. 6

5.6.5 IDENTIFICATION CHECKS

Redacted Pursuant to N.Y. Public Officers Law, Art. 6

5.6.6 SIGN IN/OUT PROCEDURES

Redacted Pursuant to N.Y. Public Officers Law, Art. 6

SPECIAL ACCESS CONTROL PROCEDURES

The purpose of this procedure is to control the access and egress of employees, and lawfully permitted visitors and contractors, to the facility during security hours.

5.6.6.1 EMPLOYEES

Redacted Pursuant to N.Y. Public Officers Law, Art. 6

5.6.6.2 EMPLOYEES WITHOUT PROPER ID

Redacted Pursuant to N.Y. Public Officers Law, Art. 6

5.6.6.3 LOST OR STOLEN ID BADGES

Redacted Pursuant to N.Y. Public Officers Law, Art. 6

5.6.6.4 TERMINATED EMPLOYEE BADGES

Redacted Pursuant to N.Y. Public Officers Law, Art. 6

5.6.7 VISITORS

Redacted Pursuant to N.Y. Public Officers Law, Art. 6

5.6.8 PERSONAL VISITORS

Redacted Pursuant to N.Y. Public Officers Law, Art. 6

5.6.9 CONTRACTORS

Redacted Pursuant to N.Y. Public Officers Law, Art. 6

5.6.10 DELIVERIES

Redacted Pursuant to N.Y. Public Officers Law, Art. 6

5.6.11 PROPERTY AND EQUIPMENT REMOVAL PROCEDURE

Redacted Pursuant to N.Y. Public Officers Law, Art. 6

5.6.12 PACKAGE INSPECTION

Redacted Pursuant to N.Y. Public Officers Law, Art. 6

5.6.12.1 CITIVA MEDICAL'S PROPERTY

Redacted Pursuant to N.Y. Public Officers Law, Art. 6

Redacted Pursuant to N.Y. Public Officers Law, Art. 6

5.6.12.2 PERSONAL PROPERTY (PERSONAL PACKAGES)

Redacted Pursuant to N.Y. Public Officers Law, Art. 6

5.6.13 CARD ACCESS

Redacted Pursuant to N.Y. Public Officers Law, Art. 6

5.6.14 PATROL PROCEDURES

Redacted Pursuant to N.Y. Public Officers Law, Art. 6

Redacted Pursuant to N.Y. Public Officers Law, Art. 6

5.6.15 EMERGENCY RESPONSE PROCEDURES

5.6.15.1 FIRE ALARM RESPONSE PROCEDURE

Redacted Pursuant to N.Y. Public Officers Law, Art. 6

5.6.15.2 FIRE SPRINKLER SYSTEM

Redacted Pursuant to N.Y. Public Officers Law, Art. 6

IF ANY OF THESE ALARMS ACTIVATE, FOLLOW THE PROCEDURE BELOW:

Redacted Pursuant to N.Y. Public Officers Law, Art. 6

Redacted Pursuant to N.Y. Public Officers Law, Art. 6

5.6.15.3 FIRE ALARM RESPONSE PROCEDURE

Redacted Pursuant to N.Y. Public Officers Law, Art. 6

5.6.16 EVACUATION PROCEDURE

Redacted Pursuant to N.Y. Public Officers Law, Art. 6

5.6.16.1 PURPOSE AND OBJECTIVES

Redacted Pursuant to N.Y. Public Officers Law, Art. 6

Redacted Pursuant to N.Y. Public Officers Law, Art. 6

5.6.16.2 GENERAL GUIDELINES

Redacted Pursuant to N.Y. Public Officers Law, Art. 6

5.6.16.3 RESPONSIBILITIES OF DIRECTOR OF SECURITY AND SECURITY OFFICERS

Redacted Pursuant to N.Y. Public Officers Law, Art. 6

Redacted Pursuant to N.Y. Public Officers Law, Art. 6

5.6.16.4 ALERTING OR SIGNALING BUILDING OCCUPANTS IN CASE OF FIRE OR OTHER EMERGENCY

Redacted Pursuant to N.Y. Public Officers Law, Art. 6

5.6.16.5 EVACUATION PROCEDURES FOR BUILDING OCCUPANTS

Redacted Pursuant to N.Y. Public Officers Law, Art. 6

Redacted Pursuant to N.Y. Public Officers Law, Art. 6

5.6.16.6 DISABLED OCCUPANTS

Redacted Pursuant to N.Y. Public Officers Law, Art. 6

5.6.16.7 CRITICAL OPERATIONS SHUTDOWN

Redacted Pursuant to N.Y. Public Officers Law, Art. 6

5.6.16.8 ACCOUNTABILITY PROCEDURES FOR EMERGENCY EVACUATION

Redacted Pursuant to N.Y. Public Officers Law, Art. 6

5.6.16.9 RESCUE AND MEDICAL DUTIES

The Fire Department or Emergency Medical Technicians (EMT) will conduct all rescue and medical duties.

Do not move injured personnel. Keep the person lying down, covered and warm

5.6.17 SECURITY SUPERVISOR RESPONSIBILITIES

Location: Citiva Medical Manufacturing Facility – Romulus, NY
Position: Security Supervisor
Reports to: Director of Security

5.6.17.1 OPERATIONAL MANAGEMENT

SAFETY:

- Develop/maintain safety programs outlining site-specific hazards for Security Officers, including vehicle safety and driving safety.

OPERATIONAL PROCEDURES:

- Develop/maintain/review operational procedures so that a valid site specific operational procedures manual and post orders are always available for emergency reference by the security staff.

SECURITY OFFICER TRAINING:

- Provide site specific initial on-the-job training for each Security Officer.

UNIFORMS:

- Maintain uniform and appearance standards as outlined in the Security Officer handbook.
- Forward any uniform requisitions to the Director of Security or the Uniform Department.

OVERTIME:

- Identify and maintain adequate staffing levels to minimize/eliminate overtime.

SCHEDULING:

- Meet all contractually scheduled hours.
- Provide a yearly vacation schedule for the security staff in order to plan for vacation coverage.

POLICIES:

- Enforce Citiva Medical Policies as outlined by the Security Officer Handbook and operational procedures manual.

STANDARDS & AUDIT COMPLIANCE:

- Meet and exceed operational audit standards.

EQUIPMENT:

- Identify equipment utilized at the account, including vehicles, and maintain appropriate shift inventory and maintenance checklists/follow-up.

5.6.17.2 COMMUNICATIONS MANAGEMENT

SECURITY OFFICER PERFORMANCE EVALUATIONS:

- Objectively evaluate Officers every six (6) months in a face-to-face meeting.

RECOGNITION:

- Observe, note and commend solid and top performers.

COUNSELING:

- Review substandard performance with employees face-to-face, and provide coaching and training to increase performance.
- Document counseling, training and coaching.

DISCIPLINARY ACTIONS:

- Enforce Citiva Medical standards as outlined in Employee Handbook.

BUSINESS MANAGEMENT COMMUNICATIONS:

- Meet with and listen to management, taking a proactive approach to needs.
- Report lost/stolen ID badges to the management.
- Ensure that the badges of terminated employees are turned in to security in order to be forwarded to the management.
- Report all incidents to management.

ACCOUNTS:

- Be responsible for assigned Security Officers seven (7) days a week.

5.6.17.3 ADMINISTRATIVE MANAGEMENT

LOGS:

- Review all security logs, tours and reconcile against shift responsibilities, post orders, monitored and unmonitored patrols.
- Review building employee registers, identify employees who fail to use their ID cards, and submit a report to management for action.

INCIDENT REPORTS:

- Review all incident reports prior to submitting to management.
- Distribute copies to management and Director of Security.

TRAINING:

- Submit complete and accurate training documentation: on-the-job checklists and retraining follow-ups with agendas.

FINANCIAL:

- Prepare time-sheets and submit them to the Director of Security for payroll purposes
- **All other duties as assigned.**

5.6.18 SECURITY OFFICER – MANUFACTURING FACILITY PATROL, RESPONSIBILITIES

Redacted Pursuant to N.Y. Public Officers Law, Art. 6

Redacted Pursuant to N.Y. Public Officers Law, Art. 6

5.6.19 GENERAL ORDERS FOR SECURITY OFFICERS

It is the job of every Citiva Medical Security Officer's duty as stated in the Citiva Medical Handbook to:

- Work at post in a courteous, disciplined manner; be neat, clean, well–groomed and properly uniformed at all times; and be alert to events, sounds, smells etc.
- Know site's policy and your post's duties; report all security violations, safety hazards and emergencies.
- Always report for duty on time and never leave your post until properly relieved.
- Receive, obey and pass on all orders from your supervisor and/or management pertinent to incidents occurring on your shift.
- Limit your conversations to your duties, and avoid distraction and over familiarity.
- Sound alarm and notify the proper authorities in cases of fire, intrusion or other emergencies.
- Call your supervisor immediately regarding any incident not covered within site's procedures.
- Be especially alert at nights and on weekends, be challenging in a firm but courteous way and be diligent in identifying all persons at or near your post.

- Allow no one to enter or leave the Citiva Medical property or carry property away (as appropriate) without proper identification and/or authorization to prevent diversion, abuse and other illegal or unauthorized activity.
- Maintain your notebook and the log/journal as a permanent record of all violations of safety/security rules, regulations, policies, procedures or incidents in an accurate, brief, clear and timely manner.
- Maintain the cleanliness of your post, and understand that eating, drinking, smoking and/or reading is not permitted at your post without your supervisor's permission.
- Citiva Medical's telephone is to be used for job-related responsibilities and emergencies only, and officers will face disciplinary action for personal phone use and will be billed the cost of such calls made.
- Act in a friendly, courteous and respectful manner towards the lawfully permitted visitors and patients, and co-workers.

5.6.19.1 REPORTING FOR DUTY

- All security personnel are required to report for duty in a complete uniform as prescribed as a condition of employment. Under no conditions will any exceptions be allowed or tolerated.
- All Security Officers must report 10 minutes prior to scheduled starting time to review any special instructions from the management, supervisor and/or the Security Officer being relieved.
- All Security Officers must sign–in at the beginning and end of each shift unless otherwise instructed by your supervisor.
- Check all site security equipment. Make sure it is in place and in proper working condition. Review all daily log/journals since your last shift. Review all employee and visitor sign–in sheets. Check all emergency equipment.

5.6.19.2 REPORTING OFF DUTY

All Citiva Medical Officers are to remain on their post until properly relieved. Advise relieving officer of all information necessary for them to properly complete their job.

IF RELIEVING SECURITY OFFICER FAILS TO REPORT, the following steps must be followed:

1. Inform the Security supervisor that relief has failed to arrive for duty.
2. Attempt to call the officer at his/her contact phone number.
3. If unable to make contact with the officer then the supervisor on duty must begin to call other officers to fill the shift.
4. If no other officers are willing to fill the shift then it is the responsibility of the officer on duty to fill the shift.
5. Under no circumstance should a security post be left unattended. Failure to remain on your post will result in disciplinary actions. Citiva Medical will make every effort to find relief promptly.
6. If there is an ongoing problem with your relief officer failing to show and/or continuous lateness, inform Security supervisor so that the issue may be addressed.

5.6.19.3 ABSENCE AND TARDINESS

The absence or tardiness of a Citiva Medical employee lowers the efficiency of operations, breaks down team work and creates unnecessary inconveniences to other employees. Therefore, it is Citiva Medical policy to enforce promptness and the presence of all employees at their assigned locations and shifts.

NOTE: If an emergency arises, contact the Security Supervisor. Citiva Medical reserves the right to investigate and confirm emergencies. Consistent absence or tardiness will result in disciplinary action by your supervisor. The following procedure must be used when calling off for a scheduled shift:

1. All call–offs must be directed to Security Supervisor at least four (4) hours before scheduled shift.
2. Name, phone number, time of scheduled shift, and reason for calling off must be given.
3. Return call from supervisor confirming replacement coverage of shift.
4. Failure to give four-(4)-hour notice will result in disciplinary action.

5.6.19.4 PERSONAL APPEARANCE AND CONDUCT

Personal Appearance:
A clean and neat appearance will gain respect and is a condition of employment. Jewelry, personal clothing, and buttons are not part of the uniform. A professional appearance is required.

Refer to specific orders for uniform requirements at this facility.

Personal Conduct:
As an employee of Citiva Medical, you will be constantly observed by the public. Appearance, your attitude and behavior all reflects on Citiva Medical. Employees must maintain an attitude of alertness, be neat in appearance, be courteous to all persons you deal with, be fair and honest in all your dealings, be understanding, and be professional remembering to put principal before personality.

5.7 SECURITY EQUIPMENT

Redacted Pursuant to N.Y. Public Officers Law, Art. 6

Redacted Pursuant to N.Y. Public Officers Law, Art. 6

Redacted Pursuant to N.Y. Public Officers Law, Art. 6

Redacted Pursuant to N.Y. Public Officers Law, Art. 6

Redacted Pursuant to N.Y. Public Officers Law, Art. 6

Redacted Pursuant to N.Y. Public Officers Law, Art. 6

CITIVA MEDICAL LLC

MEDICAL MARIHUANA PROGRAM

ATTACHMENT D

OPERATING PLAN – SECTION 6 – Standard Operating Procedure

TINCTURE PACKAGING

AND

CAPSULE PACKAGING

TINCTURE PACKAGING

I. Physical Attributes: The tincture is packaged in a bottle that is affixed with a tamper-evident shrink seal (that leaves the label area free for affixing labeling as required by regulations) and child resistant resealable dropper. It achieves unit-dosing by a 1ml graduated dropper allowing a minimal dose of 1mg of CBD or THC and a maximum dose of 9mg CBD or THC depending on the brand. Upon commencing business Tincture will be packaged in 10ml and 30ml bottles accommodating doses as low as 3 mg per day over a 30 day period.

II. Bottle Sterilization: Brands may be used by individuals with compromised immune function. Therefore the sterile status of packaging from the manufacturer must be assured to meet ISO/AAMI or AORN standards. On-site handling requirements are also comprised in these standards and the facility area will be constructed to comply with these standards. In the event that the sterile status cannot be assured by the bottle and dropper manufacturer, these materials must be sterilized on site. On-site Sterilization must be validated by testing with biological and chemical indicators upon installation. Sterilization parameters shall be calibrated and monitored. In either event, packaging personnel shall be trained to maintain the sterile status of packaging.

III. Bottle filling and capping: Filling and capping shall be accomplished with a semi-automatic or automatic machine. While sales are less than 8,000 bottles per day we will use a Flexicon FlexFeed 30V2 Filling and capping machine. When daily sales are projected to approach 8,000 bottles per day we will install a Flexicon FMB210. Equipment will be cleaned and maintained as per manufacturer recommendations. Packaging shall be handled in a sterile manner throughout the packaging and sealing process. Samples are taken periodically from each lot and tested as per 1004.14. Finished tincture is placed into quarantine until acceptable tests are returned. Retains are taken and stored as per regulation 1004.11m3

IV. Case Packaging: Bottles shall be packaged for transportation to dispensaries in 12 bottle cases. The cases will be shrink sealed.

CAPSULE PACKAGING

I. Physical Attributes:

II. The choice was made to use hard-cap dry-powder encapsulation versus hard-cap liquid caps. Dry powder encapsulation methods are well developed, having been used in pharmaceutical dosing for over 75 years. Liquid hard-cap encapsulation has a much shorter history of use in the pharmaceutical industry where the accuracy of individual dosing is critical. Capsules are packaged in individual perforated blisters on a 10 dose sheet. The sheet may be divided by the pharmacist to achieve precise monthly dose as prescribed for an individual patient. High THC brand dosing will be 5mg per capsule, High CBD brand dosing will be 10mg per capsule.

III. Preparation of powder for capsules:

a. The appropriate carrier system will be composed of excipients approved by the Department of Health pursuant to regulation 1004.11d. Citiva Medical will

present the proposed carrier system to the department for approval upon registration.

b. The ratio of carrier to Finished Oil for brand and form is determined through a development process: A graph of powder bulk density is plotted against concentration of Finished Oil. #4 capsules are filled using an optimized capsule packing method and the concentration is chosen is chosen from the graph that yields the precise dose delivery. Capsule are filled with this ratio of carrier to Finished Bulk Oil and sent for analysis. Adjustments are made if necessary. The final ratio becomes the formula for the Bill of Materials for manufacturing Capsules. Each batch of capsules is spot-checked for compliance with dose target and variance as per regulations.

c. Upon receiving a build-order from scheduling for powder for encapsulation, the manufacturing team will measure the required amount of Finished Bulk Oil and excipient from inventory and record the measurement. The excipient is added to the V- blender. The Finished Bulk Oil is added to the blender tank and distributed during blending by way of its internal intensifier and liquid distribution bar.

d. The internal parts for liquid distribution are coated from the factory to minimize adhesion of oil to internal parts.

e. Blending time and procedures are determined by the manufacturer but are independently verified by the director of manufacturing upon installation. The method of verification is specified in the Quality Assurance procedures.

f. The blended material is removed from the blender into a food safe container and weighed and placed in quarantine. A sample is removed and tested. After satisfactory test the material is placed in inventory.

g. Upon receiving a build order from scheduling the packaging team weighs the appropriate amount of powder for encapsulation into a food safe container and the event is recorded.

h. The packaging lead places the ordered amount of finished powder for encapsulation into the powder hopper of the capsule filling machine.

i. The capsules hopper is filled with capsules.

j. The capsule machine goes through start up settle-in procedure and the first capsules are placed in a holding bin for destruction.

k. After settle-in, capsules are sampled by the Quality Control lead and sent to the lab for immediate weighing to ensure they meet standards of fill weight and consistency, with an absolute confidence interval and standard deviation that places the dose well within the 5% variance allowed under 1004.11c3.

l. Periodically during encapsulation, as defined in Quality Control procedures, samples are taken by the Quality Control lead for immediate weight checks to look for variance.

m. Finished capsules are subject to final quality checks, then are inventoried by weight and count.

IV. Capsule Packaging

a. Capsule packaging is accomplished in accordance with regulations requiring unit dosing by packaging on perforated 10 dose tamper-evident blister sheets that can

be torn by the dispensing pharmacist to provide an accurate 30 day supply to the patient.

b. Upon receiving a build-order from scheduling for blister packaging, the manufacturing team will measure the required amount of capsules with a capsule counter and record the inventory draw.
c. The capsules are loaded into the capsule machine.
d. The blister sheet spools are loaded into the packaging machine.
e. The machine is taken through its start-up procedure and the run is accomplished.
f. Each blister pack is physically inspected by the packaging team to insure that every blister contains a capsule and that each blister is sealed properly.
g. Sheets that do meet spec are delaminated in a manner that complies with clean, secure procedures and the capsules are recycled into the manufacturing process.
h. Sheets are loaded by hand into tamper-evident cardboard packaging and sealed. Individual packages are labeled with lot, expiry, and other required information.
i. Sealed packages are loaded into boxes. Boxes are labeled with date-time, expiry, lot, brand and form, quantity, and other required information, and checked-into inventory.

TINCTURE PACKAGING

AND

CAPSULE PACKAGING

TINCTURE PACKAGING

I. Physical Attributes: The tincture is packaged in a bottle that is affixed with a tamper-evident shrink seal (that leaves the label area free for affixing labeling as required by regulations) and child resistant resealable dropper. It achieves unit-dosing by a 1ml graduated dropper allowing a minimal dose of 1mg of CBD or THC and a maximum dose of 9mg CBD or THC depending on the brand. Upon commencing business Tincture will be packaged in 10ml and 30ml bottles accommodating doses as low as 3 mg per day over a 30 day period.

II. Bottle Sterilization: Brands may be used by individuals with compromised immune function. Therefore the sterile status of packaging from the manufacturer must be assured to meet ISO/AAMI or AORN standards. On-site handling requirements are also comprised in these standards and the facility area will be constructed to comply with these standards. In the event that the sterile status cannot be assured by the bottle and dropper manufacturer, these materials must be sterilized on site. On-site Sterilization must be validated by testing with biological and chemical indicators upon installation. Sterilization parameters shall be calibrated and monitored. In either event, packaging personnel shall be trained to maintain the sterile status of packaging.

III. Bottle filling and capping: Filling and capping shall be accomplished with a semi-automatic or automatic machine. While sales are less than 8,000 bottles per day we will use a Flexicon FlexFeed 30V2 Filling and capping machine. When daily sales are projected to approach 8,000 bottles per day we will install a Flexicon FMB210. Equipment will be cleaned and maintained as per manufacturer recommendations. Packaging shall be handled in a sterile manner throughout the packaging and sealing process. Samples are taken periodically from each lot and tested as per 1004.14. Finished tincture is placed into quarantine until acceptable tests are returned. Retains are taken and stored as per regulation 1004.11m3

IV. Case Packaging: Bottles shall be packaged for transportation to dispensaries in 12 bottle cases. The cases will be shrink sealed.

CAPSULE PACKAGING

I. Physical Attributes:

II. The choice was made to use hard-cap dry-powder encapsulation versus hard-cap liquid caps. Dry powder encapsulation methods are well developed, having been used in pharmaceutical dosing for over 75 years. Liquid hard-cap encapsulation has a much shorter history of use in the pharmaceutical industry where the accuracy of individual dosing is critical. Capsules are packaged in individual perforated blisters on a 10 dose sheet. The sheet may be divided by the pharmacist to achieve precise monthly dose as prescribed for an individual patient. High THC brand dosing will be 5mg per capsule, High CBD brand dosing will be 10mg per capsule.

III. Preparation of powder for capsules:

a. The appropriate carrier system will be composed of excipients approved by the Department of Health pursuant to regulation 1004.11d. Citiva Medical will

present the proposed carrier system to the department for approval upon registration.

b. The ratio of carrier to Finished Oil for brand and form is determined through a development process: A graph of powder bulk density is plotted against concentration of Finished Oil. #4 capsules are filled using an optimized capsule packing method and the concentration is chosen is chosen from the graph that yields the precise dose delivery. Capsule are filled with this ratio of carrier to Finished Bulk Oil and sent for analysis. Adjustments are made if necessary. The final ratio becomes the formula for the Bill of Materials for manufacturing Capsules. Each batch of capsules is spot-checked for compliance with dose target and variance as per regulations.

c. Upon receiving a build-order from scheduling for powder for encapsulation, the manufacturing team will measure the required amount of Finished Bulk Oil and excipient from inventory and record the measurement. The excipient is added to the V- blender. The Finished Bulk Oil is added to the blender tank and distributed during blending by way of its internal intensifier and liquid distribution bar.

d. The internal parts for liquid distribution are coated from the factory to minimize adhesion of oil to internal parts.

e. Blending time and procedures are determined by the manufacturer but are independently verified by the director of manufacturing upon installation. The method of verification is specified in the Quality Assurance procedures.

f. The blended material is removed from the blender into a food safe container and weighed and placed in quarantine. A sample is removed and tested. After satisfactory test the material is placed in inventory.

g. Upon receiving a build order from scheduling the packaging team weighs the appropriate amount of powder for encapsulation into a food safe container and the event is recorded.

h. The packaging lead places the ordered amount of finished powder for encapsulation into the powder hopper of the capsule filling machine.

i. The capsules hopper is filled with capsules.

j. The capsule machine goes through start up settle-in procedure and the first capsules are placed in a holding bin for destruction.

k. After settle-in, capsules are sampled by the Quality Control lead and sent to the lab for immediate weighing to ensure they meet standards of fill weight and consistency, with an absolute confidence interval and standard deviation that places the dose well within the 5% variance allowed under 1004.11c3.

l. Periodically during encapsulation, as defined in Quality Control procedures, samples are taken by the Quality Control lead for immediate weight checks to look for variance.

m. Finished capsules are subject to final quality checks, then are inventoried by weight and count.

IV. Capsule Packaging

a. Capsule packaging is accomplished in accordance with regulations requiring unit dosing by packaging on perforated 10 dose tamper-evident blister sheets that can

be torn by the dispensing pharmacist to provide an accurate 30 day supply to the patient.

b. Upon receiving a build-order from scheduling for blister packaging, the manufacturing team will measure the required amount of capsules with a capsule counter and record the inventory draw.
c. The capsules are loaded into the capsule machine.
d. The blister sheet spools are loaded into the packaging machine.
e. The machine is taken through its start-up procedure and the run is accomplished.
f. Each blister pack is physically inspected by the packaging team to insure that every blister contains a capsule and that each blister is sealed properly.
g. Sheets that do meet spec are delaminated in a manner that complies with clean, secure procedures and the capsules are recycled into the manufacturing process.
h. Sheets are loaded by hand into tamper-evident cardboard packaging and sealed. Individual packages are labeled with lot, expiry, and other required information.
i. Sealed packages are loaded into boxes. Boxes are labeled with date-time, expiry, lot, brand and form, quantity, and other required information, and checked-into inventory.

CITIVA MEDICAL LLC

MEDICAL MARIHUANA PROGRAM

ATTACHMENT D

OPERATING PLAN – SECTION 7 – Quality Assurance Plans

SECTION 7

Quality Assurance Plans

Citiva Medical LLC

1 TABLE OF CONTENTS

2 OVERARCHING DESCRIPTION AND APPROACH 2
3 JOB DESCRIPTIONS 3
3.1 QUALITY ASSURANCE OFFICER 3
3.2 AREA SUPERVISORS 3
3.3 OPERATORS 3
3.4 SITE DIRECTOR 3
3.5 DISPENSARY MANAGER 4
4 REGULATION 1004.5 (b)(4)(iv) OF 10 NYCRR AND INVENTORY CONTROLS 4
4.1 OVERVIEW 4
4.2 STATE SELECTED “SEED TO SALE” SOFTWARE 4
5 OVERVIEW OF CITIVA MEDICAL POLICIES AND PROCEDURES RELATED TO INVENTORY CONTROL 7
5.1 DAILY PHYSICAL COUNT 7
5.2 SHIPPING PRODUCTS 10
5.3 RECEIVING TRANSFERS 11
5.4 DISPENSARY SALES TRANSACTIONS 12
5.5 PRODUCT RETURNS 13
6 OTHER QUALITY ASSURANCE PROGRAM ELEMENTS 14
6.1 MANAGEMENT OVERSIGHT AND QUALITY PROGRAM RESPONSIBILITIES 14
6.2 QUALITY RISK MANAGEMENT 15
6.3 DOCUMENT CONTROL 15
6.4 SUPPLIER QUALITY 15
6.5 MANUFACTURING CONTROLS 16
6.6 CLEANING AND SANITIZING 17
6.7 TRAINING 17
6.8 QUALIFICATION / VALIDATION 17
6.9 CALIBRATION PROGRAM 17
6.10 PREVENTIVE MAINTENANCE PROGRAM 17
6.11 PEST CONTROL PROGRAM 18
6.12 QUALITY CONTROL 18
6.13 CHANGE CONTROL 18
6.14 WAREHOUSE AND STORAGE 18
6.15 DISPENSING PROCESS 19
6.16 COMPLAINTS 19
6.17 ADVERSE EVENTS 19
6.17.1 DEFINITIONS 19
6.17.2 PROCEDURE 19
6.18 RETURNS SYSTEM 20
6.19 PRODUCT DEVELOPMENT / TECHNOLOGY TRANSFER / NEW PRODUCT INTRODUCTION 20

2 OVERARCHING DESCRIPTION AND APPROACH

Citiva Medical's core principles of integrity, transparency, security and compliance are critical to the successful implementation of a viable medical marihuana industry in the State of New York. Founded to serve the needs of New York's certified medical marihuana patients, Citiva Medical combines extensive experience in various regulated industries with a deep understanding of commercial medical marihuana operations. This includes an extensive knowledge and understanding of Quality Assurance activities and systems, designed to insure patient safety and product quality.

Chapter XIII, Part 1004 of Title 10 (Health) of the Official Compilation of Codes, Rules and Regulations of the State of New York, contains the following requirement:

§1004.5 Application for initial registration as a registered organization.

> *(b) In order to operate as a registered organization, an entity shall file an application on forms or in a manner prescribed by the commissioner. The application shall be signed by the executive officer duly authorized by the board of a corporate applicant, or a general partner or owner of a proprietary applicant. The application shall set forth or be accompanied by the following:*
>
> *(4) an operating plan that includes a detailed description of the applicant's manufacturing processes, transporting, distributing, sale and dispensing policies or procedures. The operating plan shall also include:*
>
> *(iv) quality assurance plans, including but not limited to plans to detect, identify and prevent dispensing errors;*

Citiva Medical will implement a Quality Assurance Program utilizing elements from Good Agriculture Practices (GAP), Good Handling Practices (GHP) and current Good Manufacturing Practices (cGMP). This Quality Assurance Program will encompass activities through the entire process, from cloning, through cultivation, harvesting, processing, packaging, and dispensing. The Regulations identify specific requirements within the Quality Assurance Program, and these are addressed in detail below. However, Citiva Medical's Quality Assurance Program is committed to designing and building quality oversight throughout the manufacturing and distribution processes, monitoring quality and reacting to findings in order to continuously improve the process and Quality Systems. Through this comprehensive Quality Assurance Program, Citiva Medical will be able to insure the highest quality products for our patients.

Quality assurance is reflected strongly by, and is a focal point in, many of the protocols and manuals that are a part of all of Citiva Medical's operations, including, but not limited to, the following: Cultivation Plans and related SOPs, Dispensary Operation Plans and related SOPs, Safety and Security Plans, and Processing and Extraction Plans and related SOPs.

3 JOB DESCRIPTIONS

3.1 QUALITY ASSURANCE OFFICER

The Quality Assurance Officer shall:

1. Be responsible for the overall management of the Citiva Medical Quality Assurance Program;
2. Continuously monitor, evaluate, improve and revise the Quality Assurance Program, including all practices and procedures, to increase overall visibility and control of all processes;
3. Insure that all employees have the necessary procedures, training and supervision to perform their jobs;
4. Oversee the performance of periodic reviews and internal audits of the Quality Assurance Program; and
5. Oversee all inventory discrepancy issues and approve all issue investigations.

3.2 AREA SUPERVISORS

The Operations Area Supervisors shall:

1. Be responsible for insuring that all SOPs, including those related to Quality, are followed during manufacturing operations;
2. Report any observation or comment related to quality, to the Site Director; and
3. Participate in issue resolution and investigations, as necessary, to help determine root causes of incidents which may require correction and/or improvement.

3.3 OPERATORS

The Operators shall:

1. Be responsible for following all SOPs and instructions, to help insure a consistent process;
2. Report any observation or comment related to quality, to the Area Supervisor; and
3. Participate in issue resolution and investigations, as necessary, to help determine root causes of incidents which may require correction and/or improvement.

3.4 SITE DIRECTOR

The Site Director shall:

1. Be responsible for the overall management and performance of site operations at Citiva Medical;
2. Be responsible for all paperwork, compliance, procedures, budgets, cash handling, and day-to-day operations of the Dispensary;
3. Address all operational questions and act as the liaison to Senior Management;
4. Assist in the development of Packaging/Product Management policies and procedures and be responsible for implementing them; and
5. Report any issues observed related to product Quality and participate in any investigations and corrective actions required.

3.5 DISPENSARY MANAGER

The Dispensary Manager/Supervising Pharmacist shall:

1. Be responsible for the overall management and performance of Dispensary site operations at Citiva Medical;
2. Be responsible for insuring that all procedures are followed at the Dispensary, including required inventory transactions and inventory accounts to prevent and detect inventory diversions;
3. Be responsible for initiating communicating and elevating confirmed inventory discrepancies; and
4. Be responsible for performing and documenting investigations into inventory discrepancies.

4 SECTION 1004.5 (b)(4)(iv) OF 10 NYCRR AND INVENTORY CONTROLS

4.1 OVERVIEW

With the use of the State selected "Seed to Sale" software, Citiva Medical will implement inventory controls and procedures to meet aspects of Section 1004.5(b)(4)(iv) of 10 NYCRR that will detect, identify and prevent dispensing errors.

An overview of the software tools capabilities appears below, followed by an overview of the Citiva Medical operating procedures which will be followed.

4.2 STATE SELECTED "SEED TO SALE" SOFTWARE

The State selected "Seed to Sale" software is a secured program that is password protected and also can be set for Biometric Fingerprint scanning to ensure only authorized personnel will be able to access secure documentation within the system. All the information is stored on a local server that is firewall protected from any outside presence.

§1004.6 Consideration of registered organization applications.

(b) The Department shall initially register up to five (5) applicants as registered organizations. In deciding whether to grant an application, or amendment to a registered registration, the Department shall consider whether:

(3) the applicant will be able to maintain effective control against diversion of marihuana and medical marihuana products;

The State-selected "Seed to Sale" software automatically assigns a globally unique and non-repeatable 16-digit barcode number to every plant. Furthermore, the system auto-generates a globally unique and non-repeatable 16-digit barcode number at every stage where dried marihuana must be separately identifiable from the original plant due to processing and packaging. These serial numbers, once generated are assigned, cannot be changed. In the event of a recall, the software contains a "Plant/Inventory History Report" that can track everything about the plants and products

from the time it was introduced to the facility. Tracking every gram contained in the lot, including but not limited to, all purchases containing matter from the plant or product, the contact information for the purchaser, all vendor information and transport logs.

The software has the inclusive capabilities to track all measurable aspects of a marijuana plant. In addition to the literal weights of the cannabis, the system can associate 'usable marijuana' quantities with any created infused marijuana products. The system's product conversion tools enable the quantities of usable marijuana as well as associated conversion wastes to be tracked with ease. This ensures that whether the plants and/or plant products are in their relative cultivation or processing phases, they can be fully accounted for and tracked.

The software can adjust inventory and always require a reason for removal when utilizing the inventory adjustment feature, also it has an auditing feature that can be used to track loss of product due to diversion or theft. Although the inventory can be adjusted or voided, at no time is any data ever fully deleted as the software and database maintains a log of every action, including adjustments and voids, so that the entire history of the system may be reconstructed. The availability and report ability of the system data enables the said entity to produce any information necessary for the Department during an inspection or at the Department's request.

§1004.5 Application for initial registration as a registered organization.

> *(b) The Department shall initially register up to five (5) applicants as registered organizations. In deciding whether to grant an application, or amendment to a registered registration, the Department shall consider whether:*
>
> *(4) an operating plan that includes a detailed description of the applicant's manufacturing processes, transporting, distributing, sale and dispensing policies or procedures. The operating plan shall also include:*
>
> *(ii) policies and procedures related to security and control measures that will be in place to prevent diversion, abuse, and other illegal or unauthorized conduct relating to medical marihuana and are consistent with provisions set forth in this part;*

The software is a secured program that is password protected and also can be set for Biometric Fingerprint scanning to ensure only authorized personnel will be able to access secure documentation within the system. All the information is stored on a local server that is firewall protected from any outside presence.

Transporting – transport documentation provides the following:

1. Employee identity and badge number
2. Vehicle vin number
3. Time stamped batch/lot number
4. Total quantity being transported

Diversion prevention – The "Seed to Sale" software has a biometric chain of custody module that logs every action in real time and the user who performed that action. The software has the ability to integrate with scales to deter employee theft and human error. Every action is time stamped which can be cross-referenced with security cameras that will contain date and time stamps. All of these

functions prevent diversion, abuse, and illegal or unauthorized conduct relating to medical marihuana.

§1004.5 Application for initial registration as a registered organization.

> *(b) The Department shall initially register up to five (5) applicants as registered organizations. In deciding whether to grant an application, or amendment to a registered registration, the Department shall consider whether:*
> *(iv) quality assurance plans, including but not limited to plans to detect, identify and prevent dispensing errors;*

Within the software there are numerous sales and inventory reports that can identify that exact time a sale was made, the items dispensed and the employee that made the transaction. Additionally, the software requires that each patient be added to the system with all relevant information before a sale can be made. This information includes the quantity that that patient is allowed to purchase. Patient sales amounts can be automatically set within the system to prevent any transaction outside of permitted limits. The time sales occur can be set in the system to prevent sales outside of hours of operation.

§1004.5 Application for initial registration as a registered organization.

> *(b) The Department shall initially register up to five (5) applicants as registered organizations. In deciding whether to grant an application, or amendment to a registered registration, the Department shall consider whether:*
> *(v) policies and procedures to document and investigate approved medical marihuana product returns, complaints and adverse events, and to provide for rapid voluntary or involuntary recalls of any lot of medical marihuana product. Such policies and procedures shall include a plan for any retesting of returned approved medical marihuana products, storage and disposal of marihuana and any manufactured medical marihuana products not passing requirements, and a requirement that adverse events and total recalls are reported to the department within twenty four hours of their occurrence;*

Each receipt that the software produces at the conclusion of a sale has a unique barcode that can easily be scanned to view the details of that sale. After a refund, the items are returned to the inventory count. Citiva Medical has the ability to separate its inventory in the system in order to quarantine the returned items. The softwares reporting abilities allow Citiva Medical to track and monitor these actions. It also has the ability to contact patients via email or SMS text message that have purchased a particular product in the past.

§1004.5 Application for initial registration as a registered organization.

> *(b) The Department shall initially register up to five (5) applicants as registered organizations. In deciding whether to grant an application, or amendment to a registered registration, the Department shall consider whether:*

(vii) detailed description of plans, procedures and systems adopted and maintained for tracking, record keeping, record retention and surveillance systems, relating to all medical marihuana at every stage including cultivating, possession of marihuana, and manufacturing, delivery, transporting, distributing, sale and dispensing by the proposed registered organization.

The software enables the business to collect, store, and retrieve all data and activity. All inventory records, patient records, recall reports, sales/transaction records, product disposal records, and all scanned documents can be accessed at any time (real time), either in-system or through the report creation tool. Though system actions can be adjusted or voided, at no time is any data ever fully deleted as the software and database maintains a log of every action, including adjustments and voids, so that the entire history of the system may be reconstructed. The availability and reportability of the system data enables Citiva Medical to produce any information necessary for the Department during an inspection or at the Department's request.

5 OVERVIEW OF CITIVA MEDICAL POLICIES AND PROCEDURES RELATED TO INVENTORY CONTROL

It is Citiva Medical's policy to conduct sales transactions in a manner that is effective for Dispensary operations, in compliance with New York State law and exemplifying patient service excellence. It is Citiva Medical's intent to ensure that all sale or return transactions are handled in accordance with the provisions of this section so as to best prevent, detect, identify and address errors or problems relating to such transactions involving dispensing and otherwise. Dispensary Managers are responsible for appropriate training and enforcement of the steps outlined herein, and the following steps shall only occur after the patient has presented the required documentation for gaining entrance into the Dispensary.

It is Citiva Medical's intent to ensure that all actions relating to daily physical counts, transfers or receivings are handled in accordance with this plan. As part of this Quality objective, the New York State-selected "Seed to Sale" software system will be used, where ever possible, as a compliance tool to help insure the full tracking and traceability of materials throughout the manufacturing process, from cultivation to dispensing. The use of this tool, along with the defined Policies and Procedures, will help detect, identify and prevent dispensing errors and thus insure compliance with the regulation.

The following is a detailed description of the procedures that will be followed to detect, identify and prevent dispensing errors.

5.1 DAILY PHYSICAL COUNT

Upon closing, the Dispensary Pharmacist shall conduct a 100% physical count of all approved medical marihuana products. Approved medical marihuana products include: capsule products consisting of powdered extract, tincture oil-water emulsion, and oil for vaporization.

a. Inventory Status Report and Physical Count Worksheet

Dispensary Manager/Supervising Pharmacist shall print a copy of the Inventory Status Report from the State-selected "Seed to Sale" software, for Citiva Medical's records and the Physical Count Worksheet for the Dispensary Pharmacist conducting the physical count.

The Physical Count Worksheet will be given to the Dispensary Pharmacist who is conducting the physical inventory count. The Dispensary Pharmacist will use this sheet to record both back stock and active inventory numbers as well as inputting the total of these two (2) numbers into the appropriate space. Retail items should only be recorded on this sheet if retail items were actually physically counted that day. Retail is to be fully counted at least one (1) day per week.

The Inventory Status Report should stay in the Dispensary Manager/Supervising Pharmacist's possession. The Dispensary Pharmacist or Dispensary Patient Associate should not have access to this sheet at any time, especially while conducting a physical count.

b. Conducting the Count

The Dispensary Pharmacist will validate the count by recording their initials on the top right hand corner of the Physical Count Worksheet with the date and time underneath her/his initials. Once this is complete, the physical count of all back and active stock is ready to begin. After verifying the standardized number on the container, the Dispensary Pharmacist should record on the Physical Count Worksheet as they count each product.

c. Recording Totals

The Dispensary Pharmacist will record back stock inventory directly onto the Physical Count Worksheet. The Dispensary Pharmacist will record the active inventory in the Worksheet. After the count has been completed, the Dispensary Pharmacist will add the numbers to derive a total. After completion, the Dispensary Pharmacist will hand this document to Dispensary Manager/Supervising Pharmacist.

d. Comparing Inventory

Once the Dispensary Manager/Supervising Pharmacist receives the completed Physical Count Worksheet, the Dispensary Manager/Supervising Pharmacist will match the items from the Physical Count Worksheet to the Inventory Status Report generated from the State-selected software. Using red colored ink, she/he shall place a checkmark on the Inventory Status Report next to the quantity on hand if the totals match. If the totals all match, the Dispensary Manager/Supervising Pharmacist will attach the Physical Count Worksheet to the Inventory Status Report and file the documents in conjunction with the Filing SOP. For any items that do not match, the Dispensary Manager/Supervising Pharmacist shall circle the incorrect number on the Physical Count Worksheet and Inventory Status Report.

e. Discrepancies

In the event of a discrepancy at the end of a shift, steps e(i) - e(iv) must be completed prior to leaving the Dispensary. Any exceptions to this must be approved by the Dispensary Manager/Supervising Pharmacist or Security Officer.

(i) <u>Handling Discrepancies (Dispensary Manager/Supervising Pharmacist Responsibility)</u>. After discrepancies have been identified, the Dispensary

Manager/Supervising Pharmacist shall return the Physical Count Worksheet to the Dispensary Pharmacist with instructions to re-count the items circled in red ink. If the second count is correct, the Dispensary Manager/Supervising Pharmacist shall initial and check in red ink to the right of the corrected number on both the Physical Count Worksheet and Inventory Status Report. If the second count is incorrect, step e(iii) below shall occur.

(ii) Performing a Re-Count (Dispensary Pharmacist Responsibility). The Dispensary Pharmacist will follow the same steps outlined above to re-count any items that are incorrect. First, the Dispensary Pharmacist shall place a line through the original calculations on the Physical Count Worksheet used in the first count, and shall record new numbers either just below, or to the right or left of the originals. The Dispensing Pharmacist shall record the new total in close proximity to the original total, and shall return same to the Dispensary Manager/Supervising Pharmacist.

(iii) Performing a Third Count (Dispensary Manager/Supervising Pharmacist Responsibility). If a counted item does not match the inventory status report after the second count, then the Dispensary Manager/Supervising Pharmacist will follow the same steps and conduct an independent count. If the Dispensary Manager/Supervising Pharmacist arrives at the correct number, she/he may make the correct recordings and file the report. If the Dispensary Manager/Supervising Pharmacist determines that the inventory is in fact missing, then she/he will perform a serial number audit for the item.

(iv) Performing a Serial Number Audit (Dispensary Manager/Supervising Pharmacist Responsibility). The Dispensary Manager/Supervising Pharmacist shall print the serial number report from the software system for her/his location. Using the software query capabilities, the Dispensary Manager/Supervising Pharmacist can narrow the search to the item and location necessary. This report will be used to check off all serial numbers in inventory. Once the Dispensary Manager/Supervising Pharmacist has identified the exact serial numbers that are missing/do not match, she/he must complete the Inventory Discrepancy Log and email same to the Chief Operations Officer, Chief Financial Officer, and Inventory Manager, and Security Director who will further investigate the issue. The Quality Assurance Officer will also be notified.

(v) Adjusting Inventory (Inventory Manager Responsibility). Once the issue has been properly identified and upon approval from the Chief Operations Officer, Financial Officer, and Inventory Manager, Security Director, Quality Assurance Officer and CEO, the Dispensary Manager/Supervising Pharmacist will post necessary adjustments in the inventory tracking software to correct the inventory discrepancy. Until the adjustment is made, the Dispensary Manager/Supervising Pharmacist will continue to make a notation with the quantity discrepancy in parenthesis followed by initials on future physical counts to account for the discrepancy until it is resolved.

(vi) Maintaining Inventory Records (Dispensary Manager/Supervising Pharmacist Responsibility). Per the Filing SOP, the Dispensary Manager/Supervising Pharmacist shall ensure that records for each physical count be maintained in a 3-hole binder by

month. The Inventory Status Report shall be stapled on top of the Physical Count Worksheet, and the two documents, stapled together, shall be placed in the binder. Per the Filing SOP, records will be maintained at the Dispensary for a minimum of six (6) months. After six (6) months, the Dispensary Manager/Supervising Pharmacist can transfer the records to the Citiva Medical's headquarters via Citiva Medical's Security Officer drivers.

(vii) Unsolved Inventory Discrepancies (Dispensary Manager/Supervising Pharmacist Responsibility). If steps e(i)- e(iv) are followed and the Security Director determines that the cause of the discrepancy cannot be determined, the Dispensary Manager/Supervising Pharmacist shall fill out an Incident Report detailing the inventory discrepancy and all the steps that the Dispensary Manager/Supervising Pharmacist, Inventory Manager, Dispensary Pharmacist and any other Citiva Medical employee has taken to attempt to determine the cause of the discrepancy. This report should be passed along to the Inventory Manager, Chief Financial Offer, Chief Operations Officer, and Security Director upon completion. The report will be checked for accuracy and then promptly sent along to the Quality Assurance Officer and CEO.

5.2 SHIPPING PRODUCTS

§ 1004.13 Security requirements for manufacturing and dispensing facilities

(n) Prior to transporting any approved medical marihuana product, a registered organization shall complete a shipping manifest using a form determined by the department.

Upon preparing an order for transport, Citiva Medical will create a standardized shipping manifest, known as the Medical Marihuana Manifest and Trip Plan, using the State-selected "Seed to Sale" software. This action will be completed before the system will allow documented transportation.

(1) A copy of the shipping manifest must be transmitted to the Dispensing Facility that will receive the products and to the department at least two (2) business days prior to transport.

(2) The registered organization shall maintain all shipping manifests and make them available to the Department for inspection upon request, for a period of five (5) years. A registered organization shall only transport approved medical marihuana products from a manufacturing facility to dispensing facilities.

The Medical Marihuana Manifest and Trip Plan will be generated by the system. This will be electronically transferred to the New York State Department of Health and the dispensing organization a minimum of two (2) days before the planned trip. This information will be retained in the software system for a minimum of five (5) years.

(p) An employee of a registered organization, when transporting approved medical marihuana products, shall travel directly from the registered organization's manufacturing facility to the dispensing facility and shall not make any unnecessary stops in between.

The software system has the ability to generate point-to-point directions and estimated travel times using the predetermined addresses of the Manufacturing Facility and the Dispensary.

5.3 RECEIVING TRANSFERS

Dispensaries will receive routine inventory transfers based on inventory demand and availability. Citiva Medical's designated Security Team is responsible for making each delivery and ensuring that inventory is properly received at each Dispensary. Each delivery will be accompanied by a Medical Marihuana Manifest and Trip Plan, and will be sealed in its original packaging and original sealed shipping crate from the Manufacturing Facility. If either of these two (2) elements is missing from a transfer, the receiver should stop immediately and notify the Inventory Manager, or Dispensary Manager/Supervising Pharmacist if the Inventory Manager is unavailable.

In order to maintain positive control of inventory and prevent discrepancies, Citiva Medical's Quality Assurance Plan calls for the following with respect to receiving inventory transfers:

a. Receiving (Dispensary Manager/Supervising Pharmacist Responsibility)
The Dispensary Manager/Supervising Pharmacist is responsible to conduct a receiving. In the absence of the Dispensary Manager/Supervising Pharmacist, the Inventory Manager, or CEO are authorized to conduct a review of receiving.

b. Verifying Order Numbers (Dispensary Manager/Supervising Pharmacist Responsibility)
The Dispensary Manager/Supervising Pharmacist shall match the email notification of shipment sent by the Inventory Manager. If the numbers do not match, the Dispensary Manager/Supervising Pharmacist shall contact the Inventory Manager immediately before opening. If they do match, the Dispensary Manager/Supervising Pharmacist shall sign the Transfer Complete Form and shall give it to the delivery Security Officer. The Delivery Security Team must remain at the Dispensary until the Dispensary Manager/Supervising Pharmacist has successfully verified Identification numbers. Once the delivery Security Officers have received the signed Transfer Complete Form indicating that the transfer is complete, they will return immediately to the Manufacturing Facility.

c. Locating the Medical Marihuana Manifest and Trip Plan (Dispensary Manager/Supervising Pharmacist Responsibility)
The Delivery Security Team and Dispensary Manager/Supervising Pharmacist will obtain the Medical Marihuana Manifest and Trip Plan.

d. Receiving Inventory (Dispensary Manager/Supervising Pharmacist Responsibility)
At this point, the Dispensary Manager/Supervising Pharmacist may go into the "Seed to Sale" software to receive the inventory so that it can be immediately sold. Once completed, the approved medical marihuana products are now active and available for sale to patients.

e. Verifying Items (Dispensary Manager/Supervising Pharmacist Responsibility)
Prior to physically introducing inventory into back stock, all newly received inventory must be verified against the Medical Marihuana Manifest and Trip Plan to match quantity and serial numbers Once items have been verified and checked they may be put together with the rest of the back stock and active inventory.

f. Discrepancies

In the case of a discrepancy, the Dispensary Manager/Supervising Pharmacist will record the discrepancy on the Medical Marihuana Manifest and Trip Plan and notify the Inventory Manager of the discrepancy via email. It is important to provide as much information as possible including serial numbers and quantities. The Dispensary Manager/Supervising Pharmacist should ensure that no units of approved medical marihuana products are sold if they contain a discrepancy. In the event that the discrepancy requires an adjustment, the Dispensary Manager/Supervising Pharmacist will make the required notations on any physical counts that occur.

g. Medical Marihuana Manifest and Trip Plan (Dispensary Manager/Supervising Pharmacist Responsibility)

Once the Medical Marihuana Manifest and Trip Plan has been matched, the Dispensary Manager/Supervising Pharmacist will date and initial the top right hand corner of the Medical Marihuana Manifest and Trip Plan and file the document in a binder, by month. Records will be maintained for a minimum of five (5) years, at which time the Dispensary Manager/Supervising Pharmacist may purge the records by shredding or secure disposal. The Seed-to-Sale software will retain the records for a minimum of five (5) years.

5.4 DISPENSARY SALES TRANSACTIONS

All Sales transactions are entered into the inventory tracking software.

§1004.17 Reporting dispensed medical marihuana products.

(a) A record of all approved medical marihuana products that have been dispensed shall be filed electronically with the department, utilizing a transmission format acceptable to the department, not later than 24 hours after the marihuana was dispensed to the certified patient or designated caregiver

The software provides Sales ticket reporting which provides this information and can be exported electronically.

The information filed with the department for each approved medical marihuana product dispensed will include, but will not be limited to:

(1) a serial number that will be generated by the dispensing facility for each approved medical marihuana product dispensed to the certified patient or designated caregiver;
(2) an identification number which shall be populated by a number provided by the department, to identify the registered organization's dispensing facility;
(3) the patient name, date of birth and sex;
(4) the patient address, including street, city, State, ZIP code;
(5) the patient's registry identification card number;
(6) if applicable, designated caregiver's name and registry identification card number;
(7) the date the approved medical marihuana product was filled by the dispensing facility;
(8) the metric quantity for the approved medical marihuana product;

(9) the medical marihuana product drug code number, which shall be populated by a number provided by the department, to represent the approved medical marihuana brand that was dispensed to the certified patient or designated caregiver, as applicable;
(10) the number of days supply dispensed;
(11) the registered practitioner's Drug Enforcement Administration number;
(12) the date the written certification was issued by the registered practitioner; and
(13) the payment method.

When applicable, a registered organization shall file a zero report with the department, in a format acceptable to the department. For the purposes of this section, a zero report shall mean a report that no approved medical marihuana product was dispensed by a registered organization during the relevant period of time. A zero report shall be submitted no later than 14 days following the most recent previously reported dispensing of an approved medical marihuana product or the submission of a prior zero report.

In conjunction with all captured patient information the specified product sale information, as well as all aforementioned static fields, the software will capture all required information with each transaction.

5.4 PRODUCT RETURNS

Each Dispensary will have a safe at its location to be made available for storage of approved medical marihuana products that need to be sent back to the Manufacturing Facility. Each Dispensary willalso be able to generate an order numbered from the "Seed to Sale" software to be able to process and track returns. Only the Dispensary Manager/Supervising Pharmacist may prepare approved medical marihuana products to be sent back to the Manufacturing Facility. When any approved medical marihuana product needs to be sent back, the process outlined below should be strictly followed as part of Citiva Medical's Quality Assurance Program. No product should ever be sent back without approval of the Inventory Manager and Dispensary Manager/Supervising Pharmacist.

Examples of returnable medicine are as follows:

- Aging inventory: Medicine that is nearing the expiry date.
- Quality issues: If there is a suspected quality issue, the Dispensary Manager/Supervising Pharmacist should seek approval from the Manufacturing Facility before returning the medicine.

If a large amount of inventory is to be returned, the Manufacturing Facility must be given advance notice of the transfer, in order to make proper arrangements for the material's return.

After double counting, the Dispensary Manager/Supervising Pharmacist will prepare the products for return. If there are different sizes/products which need to be sent back, they should be separated. A label with the product, size, quantity and each serial number should be placed in a bag with the products. The bag should be placed in the safe for storage until it is transferred back to the Manufacturing Facility.

The Dispensary Manager/Supervising Pharmacist will fill out a Return Transfer Ticket listing any products being sent back, separated by product brand and dosage and having quantity and each serial number listed accordingly. The Dispensary Manager/Supervising Pharmacist will sign a Transfer Complete Form verifying that the contents on this Medical Marihuana Manifest and Trip Plan exactly match the approved medical marihuana products that are being placed in the container for return, which is then sealed.

The Dispensary Manager/Supervising Pharmacist will supervise a Dispensary Pharmacist performing a double count of the inventory to be returned.

The products will be placed in a container and have a software generated order numbered attached to the sealed container. These order numbers will immediately be e-mailed to the Packaging Manager and Inventory Manager along with a scanned copy of the Return Transfer Ticket.

The original Return Transfer Ticket is given to the driver. A copy of the Return Transfer Ticket will be e-mailed to the Packaging Manager and Inventory Manager. If Packaging and Inventory Manager are not notified, the Manufacturing Facility will not accept the return.

Once arriving in the Manufacturing Facility, the order numbers will be verified by the Inventory Manager. After the numbers and seals are verified, the Inventory Manager will open the container and verify that the Return Transfer Ticket exactly matches the medicine that has been sent back.

Once the Inventory Manager has verified the contents are correct, she/he will adjust the inventory in the software. If a discrepancy is found at this stage, no adjustments or disposals will be made. The discrepancy must be logged and an investigation will follow. If no resolution is found, an incident report will be filed and the Quality Assurance Officer will be notified.

6 OTHER QUALITY ASSURANCE PROGRAM ELEMENTS

Citiva Medical's Quality Assurance Program is designed to provide oversight of all aspects of the Operations which could impact the manufacturing, storage, handling, testing and dispensing of the finished products. The Quality Assurance Program elements are based on Citiva Medical's extensive knowledge of and experience with Good Agriculture Practices (GAP), Good Handling Practices (GHP) and the FDA's current Good Manufacturing Practices for the production of Drugs and Foods. The intent is to implement a Quality Assurance Program that builds Quality into the process by providing the controls necessary to consistently manufacture the products, thoroughly document all aspects of the process (through SOPs and Quality Records) and through Quality Control testing, assure the quality and purity of each lot of product produced.

The following is a list of Quality Assurance Program elements (or Quality Systems) which will be designed and implemented at Citiva Medical. The complexity of each Quality System will depend on the Quality and Business Risks associated with the system.

6.1 MANAGEMENT OVERSIGHT AND QUALITY PROGRAM RESPONSIBILITIES

Citiva Medical will employ a Quality Assurance Officer, who is responsible for all elements of the Quality Assurance Program, however quality is considered to be a major responsibility of all employees, with participation from corporate senior staff as well as site management staff, Quality Policies and Procedures will be developed and implemented to insure control throughout all processes.

6.2 QUALITY RISK MANAGEMENT

When appropriate, Quality Risk Management will be performed to determine the need and complexity of Quality Systems and to assist in Quality related decisions. Risk Management may include:

- Position Papers, documenting company positions, opinions, decisions and rationale related to Quality Assurance and Quality Systems.
- Quantitative Risk evaluations utilizing tools such as Failure, Mode, and Effect Analysis (FMEAs).

6.3 DOCUMENT CONTROL

- Document Management System – a controlled, secure electronic document management system will be established and used to maintain all Controlled Documents, Master Records, batch related records and testing records.
- Controlled Documents which will be required are defined as the following:
  - Policies, Procedures, Job Aids, Forms
  - Bills of Materials (BOMs) – a list of all components and ingredients required for the production of each final product dosage form
  - Master Batch Records – used to generate lot specific batch records
  - Specifications
    - Components – primary packaging
    - Ingredients – include assigning Expiry Dates
    - In-Process (Bulk) Products
    - Finished Products – for each dosage form
  - QC Test Methods

- Electronic Records and Electronic Signatures Program – the Document Management System as well as any other electronic systems used in the manufacturing, packaging, storing and distribution of regulated products should be evaluated against 21 CFR Part 11 and qualified.

6.4 SUPPLIER QUALITY

- Supplier Approval System and List – a procedure will be developed to determine the process of approving suppliers of ingredients used in processing the final products and for primary packaging components (product contact). A controlled list of Approved Suppliers will be maintained.

- Material Approval System and List – a procedure will be developed to determine the process of approving ingredients and components for use in the final products. A controlled list of Approved Materials will be maintained.
- Purchasing Control – A procedure will be developed to insure that only approved materials are ordered from approved suppliers, for production of the final product.

6.5 MANUFACTURING CONTROLS

Manufacturing Control will be achieved through the use of various documents and systems designed to insure that only approved materials are used for each dosage form, to maintain lot control throughout the manufacturing process, to provide instructions for consistent production of products, to provide documentation and forms to record the manufacturing activities for each lot of products, to manage manufacturing issues and deviations. The system will utilize documents and procedures such as the following:

- Bills of Material
- Batch Records
- Ingredient and Component Release – approval for use
- Ingredient and Component Issuing – to insure correct released materials are issued to Production
- Lot Control – will use the "Seed to Sale" software
- Packaging and Label Control
  - Codes, Expiry Dating – specified in the Batch Records and generated by the "Seed to Sale" software
  - Finished Product Inspection

- Yield Determination
- Issue Resolution – Deviations, Investigations and Corrective Actions, Preventive Actions (CAPA)

Citiva Medical recognizes that Quality Assurance specifically deals with the ability to adequately address unavoidable errors or issues that are bound to occur in daily operations, including without limitation dispensing errors.

Utilizing the experience of its management team, Citiva Medical will maintain a Quality System to identify, detect, prevent, mitigate and/or appropriately address in a timely manner such errors and/or problems commonly occurring in operations such as Citiva Medical's, including, but not limited to, those relating to dispensing errors and that also directly or indirectly relate to:

- Transaction matters, controls and protocols;
- Awareness and understanding of more frequently occurring issues/problems in transactions;
- Inventory matters, controls and controls;
- Quality matters, controls and protocols;
- Product return matters, controls and protocols; and
- Suspicion of diversion matters, controls and protocols.

Through a thorough investigation, root causes of errors will be determined, and Corrective and Preventive Actions put in place to mitigate the risk of reoccurrence of those errors and issues.

- Batch Record review and Product Release (QA)

6.6 CLEANING AND SANITIZING

A Cleaning and Sanitizing Program will be developed and implemented to insure that all Production areas are maintained in a clean State and that all Production equipment is clean prior to use. The system will include scheduling of cleaning activities, instruction and procedures for cleaning and documentation and record of the cleaning performed. It will also include a routine environmental monitoring system for cleanliness.

6.7 TRAINING

A Training System will be developed and utilized to define training requirements for each position, schedule the training and define the documentation requirements to record the training. Training will include general instruction on Good Agriculture Practices, Good Handling Practices and Good Manufacturing Practices, where applicable.

6.8 QUALIFICATION / VALIDATION

A Qualification and Validation system should be developed in order to insure and document that the following are designed, built, installed and used correctly, to meet the requirements of Citiva Medical operations:

- Facilities, Utilities, Equipment
- Processes
- Laboratory Methods and Instruments
- Cleaning Activities
- Computer Systems

6.9 CALIBRATION PROGRAM

A Calibration Program will be implemented to define the procedures, the schedule, and generate the documentation for maintaining the following instruments in a Calibrated State:

- Instruments used in Manufacturing – Scales, pH Meters, etc.
- Lab Instruments

6.10 PREVENTIVE MAINTENANCE PROGRAM

A Preventive Maintenance Program will be implemented to define the procedures/instructions, the schedule, and generate the documentation for performing routine maintenance on the following:

- Facilities, Utilities, Equipment
- IT Systems
- Lab Instruments and Equipment
- Filters – Production and HVAC

6.11 PEST CONTROL PROGRAM

A controlled Pest Control Program will be implemented to monitor pest activity outside and inside the manufacturing facility. The Pest Control Program will utilize only New York State approved materials.

6.12 QUALITY CONTROL

See Section 9.9 for a detailed description of the Quality Control System. The system will address all requirements defined within the Regulations and will include the following elements:

- Test Methods
  - Use of only approved Test Methods (compendia or validated)
  - Standards / Reagents Management procedures

- Out of Specification investigation process
- Reporting of Test Results – Certificate of Analysis
- Record Retention (chromatograms, notebooks, etc.)
- Reserve Sample Retention (controlled storage conditions)
- Product Stability Program

6.13 CHANGE CONTROL

A Change Control system will be implemented to evaluate changes to materials, components, processes, critical equipment and utilities, test methods, controlled documents, etc. The purpose of the evaluation is to determine the impact of the change on the current defined and controlled process. The objective is to identify the scope and risk of the change, to identify the impact of the change on other systems, to determine the effectiveness of the change and to better manage all activities related to the change.

6.14 WAREHOUSE AND STORAGE

A Quality system and procedures will be developed to define the activities related to the Warehouse and Storage. These will include the following:

- Receipt, Storage, Material Release (QA), Labelling
- Issuing Material to Production
- Distribution
- Inventory Control

6.15 DISPENSING PROCESS

The Dispensing Process is detailed in Section 3.

6.16 COMPLAINTS

The patient has the right to freely voice grievances and recommend changes in care or services without fear of reprisal or unreasonable interruption of services. Service, equipment and billing complaints will be communicated to management and upper management. These complaints will be documented in the *Complaint Log*, and completed forms will include the patient's name, address, telephone number, and a summary of the complaint, the date it was received, the name of the person receiving the complaint, and a summary of actions taken to resolve the complaint. At Citiva Medical Dispensaries, the complaint will be documented no later than 24 hours after the occurrence. The Patient Complaint Log and the Citiva Medical Complaint Log can be referenced in Section 8.6 Exhibits, sub-Section 8.6.1 and 8.6.2.

All complaints will be handled in a professional manner. Within five (5) calendar days of receiving a beneficiary's complaint, we will notify the beneficiary using either verbally, by telephone, email, fax, or letter format, that we have received and are investigating the complaint. Within 14 calendar days, we will provide written notification to the beneficiary of the results of our investigation and response. If there is no satisfactory resolution of the complaint, the next level of management will be notified progressively and up to the president or owner of the company.

The patient will be informed of this complaint resolution protocol at the time of set-up of service.

6.17 ADVERSE EVENTS

In the event a patient has any reaction to a medication which could be attributed to an allergy to the drug, the medication is to be withheld and the physician notified immediately. If the reaction is determined to be, or possibly is, an allergic one, and the medication is discontinued, the following actions should be taken.

6.17.1 DEFINITIONS

6.17.1.1 ADVERSE MEDICATION REACTION:

An undesirable or unintended harmful effect occurring as a result of a medication (e.g., heavy sedation, extrapyramidal symptoms, agitation, psychotic manifestations, severe cramping, nausea, vomiting, diarrhea, ataxia, etc.); an allergic reaction in a patient with no documented history of allergy to the medication.

6.17.2 PROCEDURE

1. The Dispensing Pharmacist reviews all information carefully for the presence of data on medication allergy.
2. Distinguishes between true allergy and intolerance to medications.

3. Documents a history of allergy to medications as part of the initial data entry.
4. Notifies the physician immediately in the event a patient has any untoward reaction to a medication not previously documented which may be attributed to a medication sensitivity.
5. If the reaction is determined to be an allergic one and the medication is discontinued, the pharmacist makes note in the patient's profile. Includes documentation of communication with physician and patient/family.

6.18 RETURNS SYSTEM

Section 1 of the Operating Plan details the specific procedures for handling the Destruction/Disposal System for ingredients, sub-lots, lots, production scrap, rejected material, returned product, and lab samples.

6.19 PRODUCT DEVELOPMENT / TECHNOLOGY TRANSFER / NEW PRODUCT INTRODUCTION

A process will be developed to aid in the scale up of new products to the controlled manufacturing process, to insure a thorough transition, minimize waste and batch loss and help evaluate and manage the impact to all existing Quality Systems and documents. This system can be used as an aid or tool to the overall Project Management associated with introducing a new product or major change to a product or process.

CITIVA MEDICAL LLC

MEDICAL MARIHUANA PROGRAM

ATTACHMENT D

OPERATING PLAN – SECTION 8 – Returns, Complaints, Adverse Events and Recalls

SECTION 8

Returns, Complaints, Adverse Events, and Recalls

Citiva Medical LLC

1 TABLE OF CONTENTS

2 OVERALL APPROACH TO RETURNS, COMPLAINTS, ADVERSE EVENTS, AND RECALLS 2
3 RETURNS 2
3.1 RETURN POLICY 2
4 COMPLAINTS 2
4.1 PROTOCOL FOR RESOLVING COMPLAINTS FROM PATIENTS 2
5 ADVERSE EVENTS 3
5.1 DEFINITIONS 3
5.1.1 ADVERSE MEDICATION REACTION: 3
5.2 PROCEDURE 3
5.3 STAFF EDUCATION 4
5.4 PATIENT EDUCATION 4
6 RECALLS 4
6.1 STATEMENT OF RECALL PLAN 4
6.2 RECALL FLOW DIAGRAM 5
6.3 DEFINITIONS 6
6.4 RECALL PROCEDURES 6
6.5 ASSIGNMENT OF ROLES AND RESPONSIBILITIES 6
6.6 RECALL COORDINATOR 6
6.7 RECALL COMMITTEE 7
6.8 RESPONSIBILITIES 7
6.9 EVALUATION OF THE COMPLAINT OR CONDITION 7
6.10 IDENTIFICATION OF IMPLICATED PRODUCTS 8
6.11 NOTIFICATION OF AFFECTED PARTIES 8
6.12 REMOVAL OF AFFECTED PRODUCT 9
6.12.1 REMOVAL 9
6.12.2 CONTROL OF RECALLED PRODUCT WHEN CITIVA MEDICAL RETAINS RECALLED PRODUCT: 9
6.13 PRODUCT DISPOSITION 9
6.14 RECALL EFFECTIVENESS 10
6.15 TERMINATION OF A RECALL 10
7 MOCK RECALL 10
8 CODE OF ETHICS 10
8.1 EMPLOYEE'S RESPONSIBILITIES TO THE ORGANIZATION 11
8.2 RESPONSIBILITIES TO THOSE WHO SERVED AND TO THE COMMUNITY 11
8.3 COMPLIANCE 11
8.4 ANTI-KICKBACK AND SELF-REFERRAL CONCERNS 12
9 EXHIBITS 13
9.1 PATIENT COMPLAINT LOG 13
9.2 CITIVA MEDICAL COMPLAINT LOG 14
10 APPENDIX A – EVENT DOCUMENTATION 15

10.1 TEMPLATES 15
10.1.1 RECALL EVENTS LOG (SHOULD INCLUDE THE FOLLOWING INFORMATION): 15
10.1.2 RECALLED PRODUCT INFORMATION DATA SHEET (SHOULD INCLUDE THE FOLLOWING INFORMATION): 15
10.1.3 EXAMPLE PRODUCT COMPLAINT REPORT 15
11 APPENDIX B – ASSIGNED RESPONSIBILITIES 15
11.1 SAMPLE ASSIGNMENTS (MAY INCLUDE, BUT NOT BE LIMITED TO THE FOLLOWING) 15
11.2 LIST OF ASSIGNMENTS 15
11.2.1 DESIGNATION OF THE RECALL COORDINATOR 15
11.2.2 LEGAL COUNSEL 16
11.2.3 RECALL COMMITTEE 16
11.3 ASSIGNMENT 16
11.4 EVALUATION 16
11.5 IDENTIFICATION 16
11.6 NOTIFICATION 17

2 OVERALL APPROACH TO RETURNS, COMPLAINTS, ADVERSE EVENTS, AND RECALLS

Citiva Medical's first commitment has always been, and always will be, to the patient. This means that the product Citiva Medical produces for its patients will always be of the highest quality. The plants, the intermediate products, and the final approved medical marihuana products are tested by Citiva Medical's Quality Control at each step in the manufacturing process to ensure the safety, purity, and potency of the final brand and form. To ensure our approved medical marihuana is of this standard and that dispensary operations run smoothly, it is imperative that returns, complaints, adverse events and recalls are all addressed appropriately and professionally.

For each of the matters referred to above, a Citiva Medical Policy has been outlined below and a Standard Operating Procedure has been established and listed in Section Six (6). Standardizing these procedures with SOPs and policies ensure undesirable events are kept to a minimum and any issue that do arise can be remedied quickly and efficiently. This will allow for premium patient care and solidification of a quality product.

If ever a complication where to arise in which there an adverse effect or Citiva Medical needed to recall approved medical marihuana products, the Department of Health would be notified in at least 24 hours.

3 RETURNS

3.1 RETURN POLICY

Citiva Medical's commitment to a safe environment and a quality product is always a priority. In order to make sure those goals are reached it is vital that when approved medical marihuana products are returned to a Citiva Medical Dispensary that the return is handled properly.

Citiva Medical Dispensaries will maintain a record of all marihuana products that are returned either by the registered patient or the patient's registered caregiver. The dispensary is responsible for the disposition of the returned products. The dispensary will store the returned product in the safe and separate area where all the other medications are stored according to Department of Health regulations. All returned medication products will be returned back to the manufacturing facility following the security and transportation regulations designated by the Department of Health.

4 COMPLAINTS

4.1 PROTOCOL FOR RESOLVING COMPLAINTS FROM PATIENTS

The patient has the right to freely voice grievances and recommend changes in care or services

without fear of reprisal or unreasonable interruption of services. Service, equipment and billing complaints will be communicated to management and upper management. These complaints will be documented in the *Complaint Log*, and completed forms will include the patient's name, address, telephone number, and a summary of the complaint, the date it was received, the name of the person receiving the complaint, and a summary of actions taken to resolve the complaint. At Citiva Medical Dispensaries the complaint will be documented no later than 24 hours after the occurrence. The Patient Complaint Log and the Citiva Medical Complaint Log can be referenced in Section 8.6 Exhibits, sub-Section 8.6.1 and 8.6.2.

All complaints will be handled in a professional manner. Within five (5) calendar days of receiving a beneficiary's complaint, we will notify the beneficiary using either verbally, by telephone, email, fax, or letter format, that we have received and are investigating the complaint. Within 14 calendar days, we will provide written notification to the beneficiary of the results of our investigation and response. If there is no satisfactory resolution of the complaint, the next level of management will be notified progressively and up to the president or owner of the company.

The patient will be informed of this complaint resolution protocol at the time of set-up of service.

5 ADVERSE EVENTS

In the event a patient has any reaction to a medication which could be attributed to an allergy to the drug, the medication is to be withheld and the physician notified immediately. If the reaction is determined to be, or possibly is, an allergic one, and the medication is discontinued, the following actions should be taken.

5.1 DEFINITIONS

5.1.1 ADVERSE MEDICATION REACTION:

An undesirable or unintended harmful effect occurring as a result of a medication (e.g., heavy sedation, extrapyramidal symptoms, agitation, psychotic manifestations, severe cramping, nausea, vomiting, diarrhea, ataxia, etc.); an allergic reaction in a patient with no documented history of allergy to the medication.

5.2 PROCEDURE

1. The Pharmacist reviews all information carefully for the presence of data on medication allergy.
2. Distinguishes between true allergy and intolerance to medications.
3. Documents a history of allergy to medications as part of the initial data entry.
4. Notifies the physician immediately in the event a patient has any untoward reaction to a medication not previously documented which may be attributed to a medication sensitivity.
5. If the reaction is determined to be an allergic one and the medication is discontinued, the pharmacist makes note in the patient's profile. Includes documentation of communication with physician and patient/family.

5.3 STAFF EDUCATION

Citiva Medical will review Adverse Drug Reactions with staff on an annual basis, and new staff on orientation.

5.4 PATIENT EDUCATION

Patients are requested to report any medical problems or concerns to their physicians immediately. Patient product safety insert is distributed each time a medication is dispensed.

6 RECALLS

The primary goal of Citiva Medical's Recall Process is to protect New York State's medical marihuana patients by removing products from commerce that have been determined to be unsafe. This Recall Process can aid in the execution of a recall by apportioning duties and centralizing current contact information. Key Individuals that will be participating in a recall will review the Recall Plan and be familiar with the execution of the plan. In the event of a recall, Citiva Medical will send the recalled approved medical marihuana products to the preferred testing laboratory. Pending the laboratory results, Citiva Medical's executives will decide the next steps for the products (e.g., disposal through approved Department of Health channels) of the recalled approved medical marihuana products).

Citiva Medical's Recall Process shall be reviewed annually and revised as necessary when personnel, procedures, processes, suppliers, or as other factors change. The Recall Plan will also be reviewed after any recall. Annual Mock Recalls will ensure that Citiva Medical is prepared for an actual recall.

6.1 STATEMENT OF RECALL PLAN

Citiva Medical maintains a Recall Plan which provides specific procedures, defines terms, and assigns roles and responsibilities when a safety issue arises with any of our products. Citiva Medical's Recall Plan is applicable for both voluntary and involuntary recall situations.

The Recall Plan will be activated whenever a potential recall requirement arises and includes the following elements:

1. Notify recall committee
2. Recall responsibility assignments
3. Key personnel and external contact information
4. Recall procedures
5. Communication templates

Success of the Recall Plan relies on the proper execution of plan elements and up-to-date information.

6.2 RECALL FLOW DIAGRAM

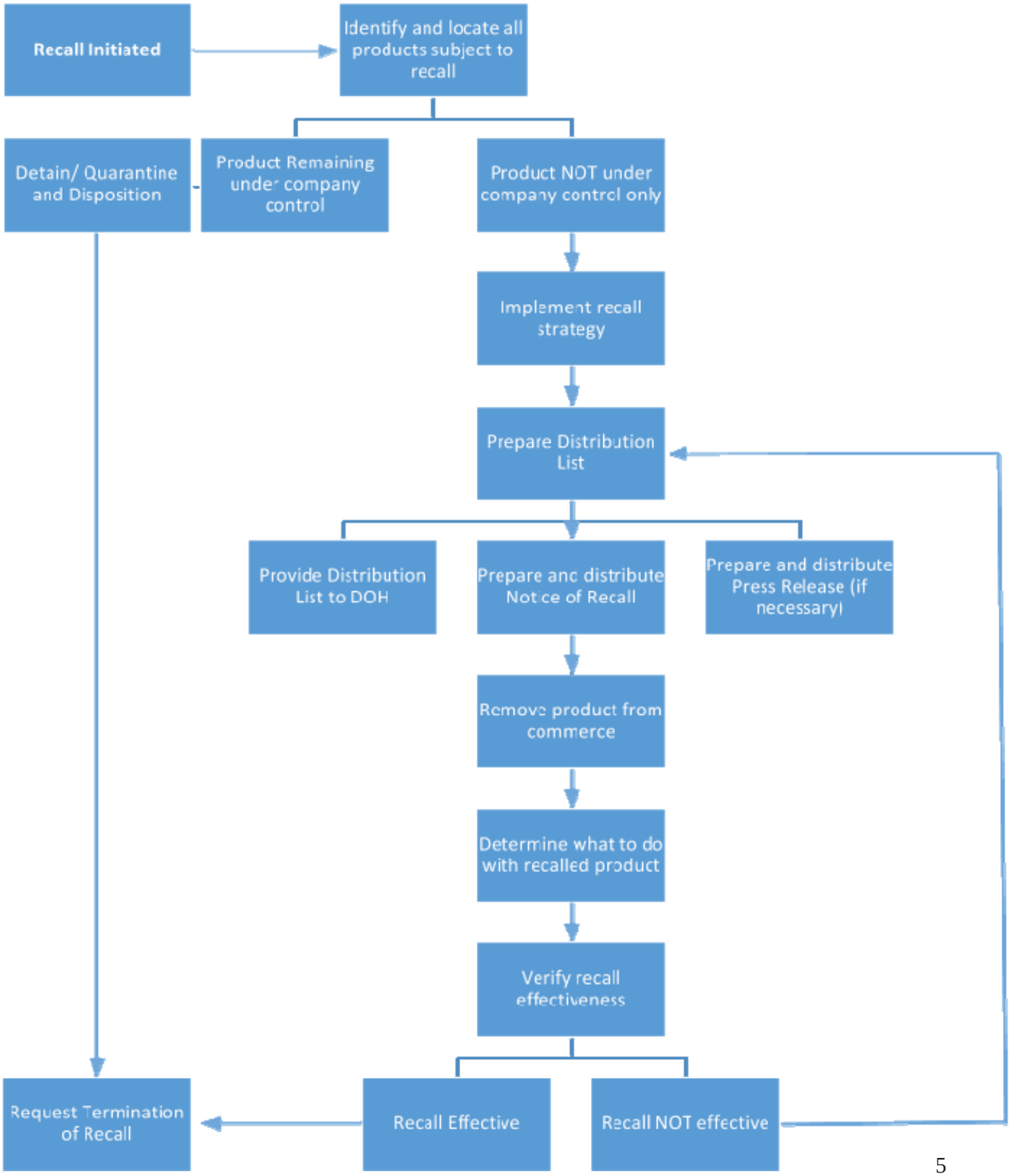

Figure 1: The Recall process will be tested through Mock Recalls to ensure that all employees and stakeholders in Citiva Medical are prepared and able to conduct a recall according to New York laws and regulations.

6.3 DEFINITIONS

- ***Recall*** *– A situation in which there is a reasonable probability that the use of, or exposure to, a contaminated or defective product will cause serious adverse health consequences.*
- ***Depth of Recall*** *– The level of product distribution for the recall (consumer, retail, manufacturer).*
- ***Distribution List*** *– A product specific distribution list that identifies accounts that received the recalled product. Requested information includes type of business, account name, addresses, and contact information.*
- ***Department of Health*** *– New York State Department of Health.*
- ***Press Release*** *– A notice that alerts the public (including regulators, retailers, consignees, other growers, processors, and consumers) that a product presents a serious hazard to health.*
- ***Regulatory Recall*** *– A firm's removal or correction of a product that Department of Health considers to be in violation of the laws it administers.*
- ***Recall Committee*** *– The group comprised of key staff with the expertise, authority, and responsibility to manage the recall.*
- ***Recall Process*** *– A written contingency plan for use in initiating and implementing a recall. The Recall Plan should be reviewed annually and revised as necessary when personnel, procedures, processes, suppliers, or as other factors change.*
- ***Recall Strategy*** *– A planned specific course of action to be taken in conducting a specific recall, which addresses the depth and scope of recall, need for public warnings, and extent of effectiveness checks for the recall.*
- ***Scope of Recall*** *– Defines the amount and kind of product in question.*
- ***Stock Recovery*** *– A firm's removal or correction of a product that has not been marketed or that has not left the direct control of the firm, i.e., the product is located on premises owned by, or under the control of, the firm and no portion of the lot has been released for sale or use.*

6.4 RECALL PROCEDURES

The recall procedure outlines the activities that Citiva Medical will take to manage the recall of our product(s) which has/have been determined to be unsafe and/or subject to regulatory action.

6.5 ASSIGNMENT OF ROLES AND RESPONSIBILITIES

Oversight of the following recall elements should be assigned to the Recall Coordinator, – the Citiva Medical Quality Assurance Director. Individuals may be responsible for more than one (1) recall element.

6.6 RECALL COORDINATOR

The Quality Assurance Director in charge serves as the Recall Coordinator and has the authority to execute the activities of the recall. Responsibilities of the Recall Coordinator include, but are not limited to:

- Assure the documentation of all recall decisions and actions in a master recall file.

- Initiate the formation of the recall committee.
- Activate various components within the company for priority assistance.
- Make recall decisions on behalf of Citiva Medical.
- Manage and coordinate the implementation of the company's product recall.
- Keep management informed at all stages of the recall.

6.7 RECALL COMMITTEE

The Product Recall Committee is composed of the various components of Citiva Medical's organization. The following functions should be represented on the committee (an individual may be responsible for more than one (1) function):

- Management (Administration)
- Recall Coordinator
- Accounting
- Consumer Affairs/Public Relations
- Customer Service
- Distribution and Supply
- Information Technology
- Legal Counsel
- Marketing
- Operations
- Production
- Purchasing
- Quality Assurance
- Sales
- Maintenance
- Records Management
- Regulatory Affairs
- Sanitation

Outside resources may need to be obtained for some of the functions.

6.8 RESPONSIBILITIES

Individual recall activities should be assigned prior to a recall event to avoid confusion during a recall. Assignment of the recall responsibilities shall be determined at the time of selection as a Registered Organization.

6.9 EVALUATION OF THE COMPLAINT OR CONDITION

Complaint receipt, processing, and evaluation are the first steps in the recall process. The steps involved in the evaluation process are:

- Receive the complaint – A file should be maintained containing any product complaints the company receives. Information that should be maintained in the product complaint file is:
  1. Complainant contact information

2. Reported problem with the product
3. Product Identification
4. Product Storage
5. Product purchase date and location
6. Illness and Injury details

- Provide the complaint to Recall Coordinator for initial evaluation. If an initial assessment indicates a recall may be necessary, the Recall Coordinator assembles the Recall Committee for a full evaluation.
- Determine the hazard and evaluate the safety concerns with the product.
- Determine the product removal strategy appropriate to the threat and location in commerce.
- Contact the appropriate regulatory authorities.
- Alert legal counsel, insurance as appropriate.
- Maintain a log of the events of the recall including information such as dates, actions, communications, and decisions.

6.10 IDENTIFICATION OF IMPLICATED PRODUCTS

It is Citiva Medical's responsibility to ensure the identification of all products and quantities of products implicated in the recall. In addition, determination should be made if any other type of approved medical marihuana product produced by Citiva Medical is affected.

A distribution list should be prepared as part of the identification process. The distribution list should at minimum identify:

- Dispensary Facilities account name that received the recalled product(s)
- Account addresses
- Contact names
- Contact telephone numbers

Additional information relating to product information may include:

- Amount of product received/shipped
- Product ship date(s)
- Amount of product returned
- Amount of product dispensed

6.11 NOTIFICATION OF AFFECTED PARTIES

Notifications during a recall must be done in a timely manner and should include the Department of Health, the product distribution chain, and medical marihuana patients when necessary and appropriate. Press releases are generally oriented to medical marihuana patients, but may be used to notify any affected party.

- The Department of Health should be notified at the earliest opportunity after the decision has been made to conduct a recall.
- Subsequent to the initial notification, the Department of Health should be updated throughout the recall process.

- Distribution Chain (i.e. Manufacturing Facility, extraction, packaging, dispensing) contacts will be notified by appropriate means (telephone, fax, email, letter, etc.). The Recall Notice **must** include all relevant recall information.
- Confirm receipt of the Notice of Recall with all accounts. A record of all account communications should be maintained.
- Medical marihuana patients_should be notified by the most effective method available. If appropriate, a press release can be used to notify consumers. Considerations for preparing a press release include:
- Issuance of a press release should be the highest priority and should be issued promptly.
- The Department of Health should be consulted before issuance of a press release.
- All relevant information should be included in the press release

6.12 REMOVAL OF AFFECTED PRODUCT

The procedure for product removal can be divided into five (5) components including: removal, control, disposition of affected product, recall effectiveness, and recall termination.

6.12.1 REMOVAL

All reasonable efforts must be made to remove affected products from commerce.

- Products in commerce should be detained, segregated, and handled in a manner determined by Department of Health regulations.
- Products that are still in the Dispensary Facility's control (e.g. inventory located onsite or in transit) should be detained, and segregated.
- All quantities and identification codes shall be documented to assist in the reconciliation of product amounts. Citiva Medical's electronic verification system and transport manifests will be consulted in order to promptly identify the recalled products.

6.12.2 CONTROL OF RECALLED PRODUCT WHEN CITIVA MEDICAL RETAINS RECALLED PRODUCT:

- All affected product returned will be clearly marked, **NOT FOR SALE OR DISTRIBUTION**, and stored in an area that is separated from any and all other medical marihuana products.
- All quantities and identification codes shall be documented to assist in the reconciliation of product amounts.

6.13 PRODUCT DISPOSITION

The final disposition of the recovered product must be determined. The final disposition must be reviewed and approved by the Department of Health. Options include:

- Destruction – Products determined to be unsafe for human consumption may be destroyed or denatured, and disposed by appropriate means.
- Recondition – Products may be reworked to remove the safety risk. For example, would be relabeling a product to declare an allergen originally omitted from the label.

All quantities, identification codes, and disposition shall be documented.

6.14 RECALL EFFECTIVENESS

Citiva Medical has primary responsibility for determining whether the recall is effective. Recall Effectiveness Checks verify that all dispensaries in the chain of distribution have been notified and have taken the appropriate action. Steps include:

- Verifying that all Dispensary Facilities have received the notification.
- Verifying that all Dispensary Facilities have taken appropriate action.
- If the response from Dispensary Facilities in the chain of distribution is less than 100%, then the recall should be deemed ineffective and the recall strategy should be reassessed.

All verifications shall be documented.

6.15 TERMINATION OF A RECALL

Termination of the recall may be considered after all reasonable efforts have been made to remove the affected products from commerce, including reconciliation, recall effectiveness, and disposition.

A termination of the recall may be requested by submitting a written request to the regulatory authorities.

7 MOCK RECALL

In addition to an annual verification of the recall plan, Citiva Medical will conduct a Mock Recall annually or whenever there are significant changes to the plan or personnel. This is an accordance with its Traceability Requirement in its implementation of the Good Agricultural Practices/Good Handling Practices (GAP/GHP) and Current Good Manufacturing Practices (CGMP). The Mock Recall will include the following elements:

- Selecting a product which has reached the regulated medical marihuana market.
- Tracing the product from the raw ingredient (e.g. source) level to the finished product in the marketplace.
- Verifying communications systems (e.g. contact information, test emails and faxes, etc.) to outside contacts.
- Modifying the recall plan to correct any problems encountered during the test. Records of these mock recalls will be documented and filed appropriately.

8 CODE OF ETHICS

The Code of Ethics serves as a guide of conduct for all employees. It contains standards of ethical behavior that apply to all dealings with colleagues, clients, the community and society as a whole. The Code of Ethics also incorporates standards governing personal behavior particularly when that conduct directly relates to the role and identity of the organization.

8.1 EMPLOYEE'S RESPONSIBILITIES TO THE ORGANIZATION

- Uphold the values, ethics and mission of the organization.
- Conduct all personal and professional activities with honesty, integrity, respect, fairness and good faith in a manner that will reflect well upon the organization.
- Comply with all laws and regulations that apply in the conduct of organizational or personal activities.
- Maintain competence and proficiency in healthcare industry and general business standards by personal assessment and continuing education programs.
- Avoid the exploitation of professional relationships for personal gain. Respect confidences.
- Refrain from participating in any endorsement or publicity that demeans the credibility and dignity of the company.
- Assure that no conflict of interest exists in any dealings involving the organization.
- Use this code to further the interests of the organization and to report any alleged violations to management.

8.2 RESPONSIBILITIES TO THOSE WHO SERVED AND TO THE COMMUNITY

- Provide healthcare services consistent with available resources and assure the existence of a resource allocation process that considers ethical ramifications.
- Conduct both competitive and cooperative activities in ways that improve community health care services.
- Continuous improvement in business management techniques.
- Respect of the customs and practices of those served, consistent with the organization's philosophy.
- Be truthful in all forms of communication, including receivables and avoid information that would create unreasonable expectations.
- Enhance the dignity and image of the organization through marketing, public relations and educational programs without undermining reputation of competitive business.
- Assure the existence of a process to evaluate the quality of care or services rendered.
- Avoid exploitation of relationships for personal advantage.
- Avoid practicing or facilitating discrimination and institute safeguards to prevent discriminatory organizational practices.
- Advise clients of rights, responsibilities and risks regarding services provided.
- Assure confidentiality, autonomy of clients and others served.
- Advise client of any financial benefit to the referring organization in the event referral to another organization, service or individual is made.

8.3 COMPLIANCE

Citiva Medical has designated the Supervising Pharmacist as the compliance officer of the corporation. All compliance related concerns should be brought to his attention. An independent quality improvement coordinator reviews compliance related materials including patient records on a monthly basis. Any compliance concerns are presented in writing to the Supervising Pharmacist.

8.4 ANTI-KICKBACK AND SELF-REFERRAL CONCERNS

1. Any contracts and arrangements with actual or potential referral sources (e.g., physicians) are reviewed by counsel and comply with all applicable statutes and regulations, including the anti-kickback statute and the Stark physician self-referral law.

    a. If Citiva Medical questions an arrangement into which it may enter, it should consider asking the DOH for an Advisory Opinion regarding the anti-kickback statute or HCFA for an Advisory Opinion regarding Stark. See 62 Fed. Reg. 7350 (February 19, 1997) and 63 Fed. Reg. 38,311 (August 16, 1998) for instructions on how to submit an Advisory Opinion to the OIG. These instructions are also located on the Internet at http://www.dhhs.gov/progorg/oig. See 63 Fed. Reg. 1645 (January 9, 1998) on how to submit an Advisory Opinion to HCFA.

2. Citiva Medical will not submit or cause to be submitted to health care programs claims for patients who were referred to Citiva Medical pursuant to contracts or financial arrangements that were designed to induce such referrals in violation of the anti-kickback statute or similar Federal or State statute or regulation or that otherwise violate the Stark physician self-referral law.
3. Citiva Medical does not offer or provide gifts, free services, or other incentives or things of value to patients, relatives of patients, physicians, home health agencies, nursing homes, hospitals, contractors, assisted living facilities, or other potential referral sources for the purpose of inducing referrals in violation of the anti-kickback statute or similar Federal or State statute or regulation.
4. Citiva Medical prides itself on the high level of service it provides to its patients and satisfaction that our patients have with our service delivery. Citiva Medical employees are not permitted to accept gifts of any type from patients. If an employee is offered a gift, the employee should thank the giver but kindly decline accepting it. Any employee receiving a gift from a patient is expected to inform their supervisor immediately.

9 EXHIBITS

9.1 PATIENT COMPLAINT LOG

Date of receipt of complaint:				
Patient's name:				
Patient's address:				
	State:	NY	Zip:	
Patient's telephone number:	( )			
Description of complaint:				
Action taken to resolve the complaint:				
Signature of representative			Date	

Office Use Only

Response letter sent ❑ Yes Date_____ Initials_____

9.2 CITIVA MEDICAL COMPLAINT LOG

Citiva Medical Complaint Log

Date Reported	Complaint ID #	Date Investigation	Summary of Issue	Final Resolution	Follow Up Actions

10 APPENDIX A – EVENT DOCUMENTATION

10.1 TEMPLATES

10.1.1 RECALL EVENTS LOG (should include the following information):

1. Name of the person creating the action
2. Dates
3. Actions
4. Communications
5. Decisions
6. Product disposition

10.1.2 RECALLED PRODUCT INFORMATION DATA SHEET (should include the following information):

1. Product description: brand, product name, size, etc.
2. Lot codes
3. Quantity of recalled product
4. Date of the action
5. Action taken for each product

10.1.3 EXAMPLE PRODUCT COMPLAINT REPORT

1. Name of the complainant, and pertinent contact information
2. Dates
3. Complaint
4. Product
5. Adverse Reaction
6. Actions
7. Communications
8. Decisions
9. Product disposition

11 APPENDIX B – ASSIGNED RESPONSIBILITIES

11.1 SAMPLE ASSIGNMENTS (MAY INCLUDE, BUT NOT BE LIMITED TO THE FOLLOWING)

11.2 LIST OF ASSIGNMENTS

11.2.1 DESIGNATION OF THE RECALL COORDINATOR

The Quality Assurance Director is the Recall Coordinator for all Recalls and Mock Recalls

11.2.2 LEGAL COUNSEL

Citiva Medical Legal Counsel will be active members of the Recall Committee in the Recall activities and Mock Recalls

11.2.3 RECALL COMMITTEE

The Recall Committee shall be assembled from:

1. Management (Administration)
2. Recall Coordinator
3. Accounting
4. Consumer Affairs/Public Relations
5. Customer Service
6. Distribution and Supply
7. Information Technology
8. Legal Counsel
9. Marketing
10. Operations
11. Production
12. Purchasing
13. Quality Assurance
14. Sales
15. Maintenance
16. Records Management
17. Regulatory Affairs
18. Sanitation

11.3 ASSIGNMENT

1. Management of the Recall – The Recall Coordinator is responsible for the coordination of all recall activities.
2. Assemble the Recall Committee – The Recall Coordinator is responsible for communicating the decision to recall to the members of the Recall Committee and that each member knows their responsibilities.

11.4 EVALUATION

1. Management Approval of the Recall – The Recall Coordinator in conjunction with the Department of Health is responsible to decide if the recall should go forward.

11.5 IDENTIFICATION

1. Create a Product Recall Log – Legal counsel is responsible to create and maintain a product recall log to document all events, when they occur and the company's response to each.
2. Identify all Products to be recalled – Chief Operations Officer is responsible for identifying all products which need to be recalled.

11.6 NOTIFICATION

1. Notify the Department of Health– The Recall Coordinator or Legal Counsel is responsible for notifying the Department of Health. Contacts shall only be made through the designated committee member.
2. Prepare the Press Release (if required) – Legal Counsel is responsible for the recall press release if the decision to prepare a press release is made. Considerations for preparing a press release include:
    a. Issuance of a press release should be the highest priority and it should be issued promptly.
    b. Consult with Department of Health before issuance of a press release.
    c. If the company decides to prepare the press release, include all relevant information.

3. Prepare the Distribution List – The Chief Operations Officer is responsible for preparing the recalled product distribution list.
4. Prepare the Notice of Recall – Legal Counsel is responsible for preparing the written notice includes all recall relevant information.
5. Distribute the Notice of Recall – Legal Counsel is responsible for distribution of the Notice of Recall to all Dispensary Facilities that received the recalled product. Responsibilities include:
    a. Confirm receipt of the Notice of Recall with all accounts.
    b. Contact accounts that have not responded to the request for confirmation.
    c. Maintain records of the account communications.

CITIVA MEDICAL LLC

MEDICAL MARIHUANA PROGRAM

ATTACHMENT D

OPERATING PLAN – SECTION 9 – Product Quality Assurance

SECTION 9

Quality Assurance Plan

Citiva Medical LLC

1 TABLE OF CONTENTS

2 OVERARCHING DESCRIPTION AND APPROACH 2
3 JOB DESCRIPTIONS 3
3.1 QUALITY ASSURANCE OFFICER 3
3.2 QUALITY CONTROL MANAGER 3
4 REGULATION 1004.5 (B) AND QUALITY CONTROLS 3
4.1 OVERVIEW 3
4.2 SPECIFIC TESTING REQUIREMENTS 4
4.3 STATE-SELECTED “SEED TO SALE” SOFTWARE 6
4.4 APPROACH TO CULTIVATION TO ACHIEVE PRODUCT QUALITY STANDARDS 11
4.4.1 QUALITY CONTROL TESTING FACILITY AND CONTAMINATION CONTROL 11
4.4.2 PRODUCT QUALITY INFLUENCERS IN THE CULTIVATION FACILITY 11
4.4.3 CLOSED ENVIRONMENT AGRICULTURE (CEA) TO CREATE THE HEALTHY PLANT GROWTH ENVIRONMENT 12
4.4.4 PRODUCT QUALITY CONTROL MEASURES IN THE CULTIVATION FACILITY 13
4.4.5 BIOSECURITY PLAN 15
4.4.6 TESTING AND SCREENINGS 15
4.5 APPROACH TO PROCESSING AND EXTRACTION FACILITY WITH A CLEAN ROOM ENVIRONMENT TO ENHANCE PRODUCT QUALITY 15
4.6 ISSUE INVESTIGATION AND CORRECTIVE ACTIONS AND PREVENTIVE ACTIONS 17
4.7 QUALITY CONTROL PROGRAM 17
4.7.1 TEST METHODS 17
4.7.2 LAB NOTEBOOKS 18
4.7.3 OUT OF SPECIFICATION RESULTS 18
4.7.4 TEST RECORDS AND DATA 18
4.7.5 REFERENCE STANDARDS 18

2 OVERARCHING DESCRIPTION AND APPROACH

Citiva Medical's core principles of integrity, transparency, security and compliance are critical to the successful implementation of a viable medical marihuana industry in the State of New York. Founded to serve the needs of New York's certified medical marihuana patients, Citiva Medical combines extensive experience in various regulated industries with a deep understanding of commercial medical marihuana operations. This includes an extensive knowledge and understanding of Quality Assurance activities and systems, designed to insure patient safety and product quality.

Chapter XIII, Part 1004 of Title 10 (Health) of the Official Compilation of Codes, Rules and Regulations of the State of New York, contains the following requirement:

§1004.5 Application for initial registration as a registered organization.

> *(b) In order to operate as a registered organization, an entity shall file an application on forms or in a manner prescribed by the commissioner. The application shall be signed by the executive officer duly authorized by the board of a corporate applicant, or a general partner or owner of a proprietary applicant. The application shall set forth or be accompanied by the following:*
>
> *(4) an operating plan that includes a detailed description of the applicant's manufacturing processes, transporting, distributing, sale and dispensing policies or procedures. The operating plan shall also include:*
>
> *(vi) a quality assurance program to track contamination incidents and document the investigated source of such incidents, and the appropriate corrective action(s) taken.*

Citiva Medical will implement a Quality Control Program utilizing elements from current Good Manufacturing Practices (cGMP) and Good Laboratory Practices (GLP). This Quality Control Program will encompass in-process testing of bulk oils and finished product testing of all lots and all dosage forms, to meet the requirements specified in the Regulations. The Regulations identify specific testing requirements for product quality and contaminants and each of these are addressed in detail below. Where possible, the State-selected "Seed to Sale" software will be used to manage Laboratory testing, results and to track contamination incidents, as described below. Certain elements of the facility and specific rooms have been designed specifically to prevent contamination, and these are also detailed below. A formal procedure for investigating quality related issues, including contamination incidents, determining root cause and implementing Corrective and Preventive Actions (CAPAs) exists in the Quality Assurance Program. Finally, several Quality Systems for the in-house Quality Control Laboratory will be created in order to provide controls and a high degree of assurance for results generated from the in-house Laboratory. Through this comprehensive Quality Control Program, Citiva Medical will be able to insure the highest quality products for our patients.

3 JOB DESCRIPTIONS

3.1 QUALITY ASSURANCE OFFICER

The Quality Assurance Officer shall:

1. Be responsible for the overall management of the Citiva Medical Quality Assurance Program;
2. Continuously monitor, evaluate, improve and revised the Quality Assurance Program, to increase overall visibility and control of all processes;
3. Insure that all employees have the necessary procedures, training and supervision to perform their jobs;
4. Oversee the performance of periodic reviews and internal audits of the Quality Assurance Program;
5. Oversee all inventory discrepancy issues and approve all issue investigations; and
6. Participate in the investigation into all OOS results and in any incidents whose root cause is determined to not be the laboratory, as required.

3.2 QUALITY CONTROL MANAGER

The Quality Control Manager shall:

1. Be responsible for insuring that all SOPs, including those related to Quality, are followed during laboratory operations;
2. Report any out of specification result or any observation or comment related to quality, to the Site Director;
3. Be responsible for all test results;
4. Be responsible for all laboratory related matters;
5. Issue Certificates of analysis for each lot tested; and
6. Participate in issue resolution and investigations, as necessary, to help determine root causes of incidents which may require correction and/or improvement.

4 SECTION 1004.5 (b) OF 10 NYCRR AND QUALITY CONTROLS

4.1 OVERVIEW

The Citiva Medical Quality Control Program has several components to insure reliable and accurate testing results for bulk in-process materials, lots, and finished product forms and brands, which are free of contamination, in order to deliver the highest quality product to our patients. These components are:

- Specific Testing Requirements
- State-selected “Seed to Sale” Software
- Facility Design
- Issue Investigation and CAPA
- Quality Control Program

4.2 SPECIFIC TESTING REQUIREMENTS

§1004.11 Manufacturing requirements for approved medical marihuana products

(c) A registered organization shall only produce such forms of medical marihuana as approved by the New York State New York State Department of Health according to the following requirements:

(1) Each registered organization may initially produce up to five brands of medical marihuana product with prior approval of the New York State New York State Department of Health of Health. These brands may be produced in multiple forms as approved by the commissioner. Thereafter, additional brands may be approved by the New York State Department of Health. However, in no case shall marihuana in unprocessed whole flower form be made available to certified patients.

(2) Each medical marihuana product brand, in its final form, shall be defined as having a specific concentration of total Tetrahydrocannabinol (THC) and total Cannabidiol (CBD) and shall have a consistent cannabinoid profile. The concentration of the following cannabinoids, at a minimum, must be reported: (i) Tetrahydrocannabinol (THC) (ii) Tetrahydrocannabinol acid (THCA) 48 (iii) Tetrahydrocannabivarin (THCV) (iv) Cannabidiol (CBD) (v) Cannabinadiolic acid (CBDA) (vi) Cannabidivarine (CBDV) (vii) Cannabinol (CBN) (viii) Cannabigerol (CBG) (ix) Cannabichromene (CBC) (x) Any other cannabinoid component at > 0.1%

(3) The final medical marihuana product shall not contain less than (95% or more than 105% of the concentration of total THC or total CBD indicated on the label for this brand. Each brand shall have a maximum of 10 mg total THC per dose.

Citiva Medical will test all lots of product against a finished product specification as part of the product release procedure, including all components listed in Section 1004.11(C)(2) of 10 NYCRR.

The software's label creation tool enables licensed producers to create custom container-client labels with any fields necessary to comply with applicable law. All aforementioned required fields can be added as variables. In addition to this a user can add custom disclaimers and warnings. The system will automatically print the container-client specific label upon completion of the sale.

§1004.14 Laboratory testing requirements for medical marihuana

(a) Medical marihuana products produced by a registered organization shall be examined in a laboratory located in New York State that is licensed by the federal Drug Enforcement Administration (DEA) and approved for the analysis of medical marihuana by the New York State Department of Health in accordance with article 5 of the public health law and subpart 55-2 of this title.

Citiva Medical will use a licensed New York State laboratory to test all lots. Citiva Medical will also have an internal laboratory to perform routine in-process and finished product analysis.

(e) Sampling and testing of each lot of final medical marihuana product shall be conducted with a statistically significant number of samples and with acceptable methodologies such that there is assurance that all lots of each medical marihuana product are adequately assessed for contaminants and the cannabinoid profile is consistent throughout.

Citiva Medical will develop a sampling plan using an industry standard methodology, such as ANS/ASQ Z1.4, to assure that all lots of each medical marihuana product are adequately assessed for contaminants and the cannabinoid profile is consistent throughout.

(g) Testing for contaminants in the final medical marihuana product shall include but shall not be limited to those analytes listed below. The New York State Department of Health shall make available a list of required analytes and their acceptable limits as determined by the Commissioner.

Analyte:

- *E. coli*
- *Klebsiella*
- *Pseudomonas (for products to be vaporized)*
- *Salmonella*
- *Streptococcus*
- *Bile tolerant gram negative bacteria*
- *Aspergillus*
- *Mucor species*
- *Penicillium species*
- *Thermophilic Actinomycetes species*
- *Aflatoxin*
- *Ochratoxin*
- *Antimony*
- *Arsenic*
- *Cadmium*
- *Chromium*
- *Copper*
- *Lead*
- *Nickel*
- *Zinc*
- *Mercury*
- *Any pesticide/herbicide/fungicide used during production of the medical marihuana product*
- *Any growth regulator used during production of the medical marihuana product*
- *Any other analyte as required by the commissioner*

Citiva Medical will test all of the analytes as required by the Commissioner. The data will be used to track contamination, investigate its source and create Corrective and Preventive Actions to remediate the cause. Contaminant results will be statistically analyzed to identify any trends or changes.

4.3 STATE-SELECTED "SEED TO SALE" SOFTWARE

Citiva Medical will use the State-selected "Seed to Sale" software to insure that all lots of product are tested and verified against the product specifications, prior to release by Quality Assurance. The software is a secured program that is password protected and also can be set for Biometric Fingerprint scanning to ensure only authorized personnel will be able to access secure documentation within the system. All the information is stored on a local server that is firewall protected from any outside presence.

§1004.10 Registered organizations; general requirements

> *(4) submit approved medical marihuana product samples to the New York State Department of Health upon request, including for quality assurance testing or investigation of an adverse event. A subset of each lot of medical marihuana product shall be retained by the registered organization to allow for testing in the future if requested by the New York State Department of Health and shall be stored unopened as indicated on the label and in the original packaging. This subset of medical marihuana product must be readily identifiable as belonging to its specific lot. The quantity retained shall be a statistically representative number of samples to allow for complete testing of the product at least three (3) times and shall be retained by the registered organization for at least two (2) years following the date of expiration*

Within the State-selected "Seed to Sale" software, there are a number of functions designed specifically for use with laboratory testing. This includes, but is not limited to the following:

- Laboratory facility detailed information options to notate lab credentials .
- Log and directly associate lab results with a specific lot or batch of product.
- Inventory adjustment logging for testing sample removals.
- Ability to separate products pending testing from available inventory.
- Direct porting of lab results to product labels.

The State-selected "Seed to Sale" software automatically assigns a globally unique and non-repeatable 16-digit barcode number to every plant. Furthermore, the system auto-generates a globally unique and non-repeatable 16-digit barcode number at every stage where dried marihuana must be separately identifiable from the original plant due to processing and packaging. Once generated these serial numbers are assigned and cannot be changed. In the event of a recall, the State-selected software contains a "Plant/Inventory History Report" that can track everything about the plants and products from the time it was introduced to Manufacturing Facility: tracking every gram contained in the lot, including, but not limited to, all purchases containing matter from the plant or product, the contact information for the purchaser, all vendor information and transport logs

§1004.10 Registered organizations; general requirements

> *6) quarantine any lot of medical marihuana product as directed by the New York State Department of Health, and not transport, distribute or dispense such lot unless prior approval is obtained from the New York State Department of Health;*
> *(7) dispose of unusable medical marihuana products that have failed laboratory testing or any marihuana used in the manufacturing process as per the registered organization's approved operating plan.*

The State-selected "Seed to Sale" software can adjust inventory and always requires a reason for removal when utilizing the inventory adjustment feature. Product in need of quarantine can be separated from bulk and placed in the designated areas in the Manufacturing Facility. Inventory destruction can be initiated through the software system requiring documentation of destruction purpose and/or approved method, as well as the employees performing the action. Although the inventory can be adjusted or voided, at no time is any data ever fully deleted as the software maintains a log of every action, including adjustments and voids, so that the entire history of the system may be reconstructed. The availability and report ability of the system data will enable Citiva Medical to produce any information necessary for the New York State Department of Health of Health during an inspection or at the New York State Department of Health of Health's request.

§1004.10 Registered organizations; general requirements

> *(8) maintain records required by article 33 of the public health law and this part for a period of five (5) years and make such records available to the New York State Department of Health upon request. Such records shall include:*
> *(i) documentation, including lot numbers where applicable, of all materials used in the manufacturing of the approved medical marihuana product to allow tracking of the materials including but not limited to soil, soil amendment, nutrients, hydroponic materials, fertilizers, growth promoters, pesticides, fungicides, and herbicides;*
> *(ii) cultivation, manufacturing, packaging and labeling production records; and*
> *(iii) laboratory testing results*

Reports are retained beyond the five (5) year requirement and can be accessed indefinitely. In addition to storing information, the system also has the ability to create custom labels for cultivation, manufacturing and testing results.

The software enables the Citiva Medical to collect, store, and retrieve all data and activity – with respect to inventory records, inventory-tracking records, supplier records, patient records, client-records, employee records, recall reports, quarantine and waste reporting, sales/transaction records, disposal records, and all scanned documents – at any time (real time), either in-system or through the report creation tool. Though system actions can be adjusted or voided, at no time is any data ever fully deleted as the software maintains a log of every action, including adjustments and voids, so that the entire history of the system may be reconstructed. The availability and report ability of the system data enables Citiva Medical to produce any information necessary for the New York State Department of Health of Health during an inspection or at the New York State Department of Health of Health's request.

§1004.11 Manufacturing requirements for approved medical marihuana products

(a) Definitions. Wherever used in this part, the following terms shall have the following meanings:

(1) "Approved medical marihuana product" is the final manufactured product delivered to the patient that represents a specific brand with a defined cannabinoid content and active and inactive ingredients, prepared in a specific dosage and form, to be administered as recommended by the practitioner.

(2) "Brand" means a defined medical marihuana extraction product that has a homogenous and uniform cannabinoid concentration and product quality, produced according to an approved and stable processing protocol. The specified brand shall have a total THC and total CBD concentration that is within 95 – 105% of that specified in milligrams per dose for that brand and shall have the same composition and concentration of inactive ingredients as that defined for the brand.

Within the software, there are a number of functions designed specifically for use with laboratory testing. The system captures all necessary quality assurance information, approved testing laboratory information, and test results. All of this information is easily reported on to the inventory or product label for accuracy.

Citiva Medical will test all lots of product against a finished product specification as part of the product release procedure, including total THC and total CBD concentration within 95 – 105% of that specified in milligrams per dose of that brand, as well as composition and concentration of inactive ingredients defined for the brand. Each brand will have a maximum of 10mg total THC per dose. In addition, Citiva Medical will offer and make available to patients, at least one (1) brand that has a low THC and/or high CBD content (i.e., a 1:20 ration of THC to CBD). Lastly, Citiva Medical will offer and make available at least one (1) brand that has approximately equal amounts of THC and CBD.

§1004.10 Registerd Organization General Requirements

(j) The registered organization shall identify each lot of approved medical marihuana product with a lot unique identifier.

(k) Each approved medical marihuana product shall be affixed with a product label. Medical marihuana product labels shall be approved by the New York State Department of Health prior to use. Each product label shall be applied at the manufacturing facility, be easily readable, firmly affixed and include:

(1) the name, address and registration number of the registered organization;

(2) the medical marihuana product form and brand designation;

(3) the single dose THC and CBD content for the product set forth in milligrams (mg);

(4) the medical marihuana product lot unique identifier (lot number or bar code);

(5) the quantity included in the package;

(6) the date packaged; 53 (

7) the date of expiration of the product;

(8) the proper storage conditions;

(9) language stating:

(i) "Medical marihuana products must be kept in the original container in which they were dispensed and removed from the original container only when ready for use by the certified patient";

(ii) "Keep secured at all times";

(iii) "May not be resold or transferred to another person";

(iv) "This product might impair the ability to drive";

(v) "KEEP THIS PRODUCT AWAY FROM CHILDREN (unless medical marihuana product is being given to the child under a practitioner's care"); and

(vi) "This product is for medicinal use only. Women should not consume during pregnancy or while breastfeeding except on the advice of the certifying practitioner, and in the case of breastfeeding mothers, including the infant's pediatrician."

(l) For each lot of medical marihuana product produced, the registered organization shall submit a predetermined number of final medical marihuana products (e.g., sealed vials or capsules; with the number of samples submitted, based on statistical analysis, determined to be representative of the lot) to an independent laboratory/laboratories approved by the New York State Department of Health. The laboratory verifying the cannabinoid content shall be approved for the analysis of medical marihuana product by the New York State Department of Health in accordance with section five hundred two of the public health law and subpart 55-2 of this title. Such laboratory, or approved laboratories cumulatively, shall certify the medical marihuana product lot as passing all contaminant testing and verify that the content is consistent with the brand prior to the medical marihuana product being released from the manufacturer to any dispensing facility.

The software's label creation tool enables licensed producers to create custom container-client labels with any fields necessary to comply with applicable law. All aforementioned required fields can be added as variables. In addition to this, a user can add custom disclaimers and warnings. The system will automatically print the container-client specific label upon completion of the sale.

§1004.10(l)

(1) Any lot not meeting the minimum standards or specifications for safety shall be rejected and destroyed by the registered organization in accordance with the registered organization's approved operating plan.

(2) Any lot not meeting the minimum standards or specifications for brand consistency shall be rejected and destroyed by the registered organization in accordance with the registered organization's approved operating plan.

The system has the ability to separate and quarantine products that do not meet the minimum standards for Safety and Brand consistency. If a product must be destroyed the system will document the destruction in accordance with the Citiva Medical's approved Operating Plan, described in Section 1 and in Citiva Medical Section 6 SOPs.

§1004.10(l)

> *(3) The registered organization shall keep and maintain records documenting submission of medical marihuana products to approved laboratories as required herein, and the results of the laboratory testing. The registered organization shall provide the New York State Department of Health with such records upon request.*

The State-selected "Seed to Sale" software enables the business to collect, store, and retrieve all data and activity -- with respect to inventory records, inventory-tracking records, supplier records, patient records, client-records, employee records, recall reports, quarantine and waste reporting, sales/transaction records, disposal records, and all scanned documents – at any time (real time), either in-system or through the report creation tool. Though system actions can be adjusted or voided, at no time is any data ever fully deleted as the software system maintains a log of every action, including adjustments and voids, so that the entire history of the system may be reconstructed. The availability and report ability of the system data enables the said entity to produce any information necessary for the New York State Department of Health of Health during an inspection or at the New York State Department of Health of Health's request.

§1004.14 Laboratory testing requirements for medical marihuana.

> *(c) The registered organization shall submit to the laboratory, and testing shall only be performed on, the final medical marihuana product equivalent to the sealed medical marihuana product dispensed to the patient (e.g., in a sealed vial or intact capsule).*

Citiva Medical will test final medical marihuana products or equivalent to the sealed medical marihuana product dispensed to the patient.

Within the software, there are a number of functions designed specifically for use with laboratory testing. This includes, but is not limited to, the following:

- Laboratory facility detail information options to notate lab credentials
- Log and directly associate lab results with a specific lot or batch of product
- Inventory adjustment logging for testing sample removals
- Ability to separate products pending testing from available inventory
- Direct porting of lab results to product labels

> *(b) (h) Audits. The New York State Department of Health may perform audits, which may include site visits. The registered organization shall provide reasonable access to the New York State Department of Health of its facilities, books and records.*

The software retains all actions performed in the system indefinitely. All records that are captured by the system within a given registered organization are accessible upon request.

Citiva Medical is committed to assisting the New York State New York State Department of Health of Health with audits and audit visits. We will welcome auditors into our Manufacturing and Dispensing Facilities and thoroughly prepare the requested materials, using the State-selected "Seed to Sale" software where applicable, to help the process to a satisfactory assessment by the audit team.

With our strong commitment to serve the registered patients of New York, we also have a commitment to meet, and exceed, the regulatory expectations of the New York State Department of Health of Health.

4.4 APPROACH TO CULTIVATION TO ACHIEVE PRODUCT QUALITY STANDARDS

4.4.1 QUALITY CONTROL TESTING FACILITY AND CONTAMINATION CONTROL

Citiva Medical will design, install, implement, handle and utilize equipment, processes and methodologies for high performance quality control testing as follows:

Facility: Design, construction and build-out of the quality control testing facility featuring all laboratory (profiling) equipment and testing;

OSHA: OSHA compliance;

Equipment: High Performance Liquid Chromatography to conduct cannabinoid profiling by way of quantitative analysis.

Training: Training and modules with respect to quantitative analysis to be perform with respect to quality control testing;

SOP's: Standard operating procedures manual preparation and updating;

Staffing: Optimum staffing plans.

Product Quality starts with Citiva Medical's physical build out of the facilities and its proprietary protocols aimed at producing healthy, highly-productive plants, and continues through to Citiva Medical's methods of extraction, packaging, sealing, and labeling. Of course, throughout the process many steps are taken to safeguard against various contamination sources (e.g., utilizing automated systems and Integrated Pest Management to safeguard against disease); to perform various testing and screenings to detect the early stages of problems (e.g., laboratory profiling); to deal specifically with the many complex factors that impact plant health; to train Citiva Medical's employees to be observant, thoughtful, educated, and prepared to enhance overall product quality and mitigate contamination; and to implement cultivation and processing techniques to achieve the required standards for approved medical marihuana products. All of the foregoing are part of a well thought out process and plan to be implemented on a daily basis by Citiva Medical to achieve the highest standards of Product Quality.

4.4.2 PRODUCT QUALITY INFLUENCERS IN THE CULTIVATION FACILITY

The highest priority of Citiva Medical is to provide certified patients with consistent, reproducible, and safe approved medical marihuana products that always meet the required New York State

Department of Health of Health standards. This goal will be advanced in the Cultivation Facility by focusing on the following influencers:

1. Best growing practices for medical marihuana
2. Strict quality control for materials, environment, cleanliness, and plant handling
3. Unique clean room building design and features
4. Strong employee training protocols
5. Detailed and recorded daily inspection procedures
6. State-of-the-art Biosecurity Plan implementation
7. Recognized process improvement through Corrective Action and Preventive Action (CAPA), on-going training and education, and collaboration with outside institutions

Citiva Medical will have a dedicated Cultivation Manager, who works closely with the Quality Control Manager, in charge of the daily observations, monitoring, and regular testing of the plants. The Cultivation Manager will ensure that Cultivation Staff follow the protocols in the Biosecurity Plan found under Section 1. All Cultivation Facility staff that work with the plants will be required to take extensive training on mold, disease, nutrient deficiencies or overfeeding, chemical residues, and other contaminant identification.

4.4.3 CLOSED ENVIRONMENT AGRICULTURE (CEA) TO CREATE THE HEALTHY PLANT GROWTH ENVIRONMENT

Creating a healthy plant environment comes from a synergy of disciplines: fine environmental control of the growing areas, defense against mold, disease and pests, appropriate nutrition, and outstanding care provided by workers in the Facility. Citiva Medical will achieve this synergy in the cultivation environment using state-of-the-art engineering and design features to create a Close Environment Agriculture (CEA) Facility. The areas within the Cultivation and Processing Facilities will be constructed with sealed “clean room” like properties. Strict employee contamination prevention protocols will be instituted. Citiva Medical will ensure that the Cultivation and Processing Facilities design, entrance/exit protocols and employee dress code matters are followed. These requirements and system descriptions are included in Appendix B-Section 1, and in the Biosecurity Plan. Examples of the requirements and descriptions from those Sections include:

a. A fully sealed, pathogen free environment to guard against any potential outside contaminants, and featuring a 36 high volume 1000 cfm carbon filtration air purification systems from each Greenhouse/Cultivation area zone
b. UV anti-bacterial A/C integration
c. Industrial dehumidification
d. Air curtains at every entrance/exit point (including loading docks) for air-born insect and mold spore prevention
e. Air showers at every cultivation area and processing entrance point for air-born insect and mold spore prevention
f. Sanitizing foot pads to be utilized by all visitors and employees prior to entering the interior of the cultivation facility and its processing area. Cultivation Facility footwear will be provided to employees and visitors

g. Clean male and female locker rooms to be used by all employees for washing and changing from their outside clothes prior to entering the interior of the production cultivation facility and processing areas for cultivation and processing purposes, respectively
h. Employee dress code requiring company provided shoes and scrubs (featuring no pockets) that will always remain in the facility for company washing and/or replacement. (Refer to Section 1 Biosecurity Plan.)
i. Decontamination staging area and processes for supply deliveries
j. Cultivation Facility cleaning of the vegetative and flowering rooms will conducted according to the procedures in Section 1 and the Section 6 SOPs
k. General Sanitary Practices will be followed throughout the Manufacturing Facility

4.4.4 PRODUCT QUALITY CONTROL MEASURES IN THE CULTIVATION FACILITY

Citiva Medical will implement several elements to enhance overall productivity of the Cultivation Facility. These elements will be tightly monitored and controlled and tested to demonstrate that the Cultivation Facility is meeting established with standards for creating a healthy plant growth environment. These elements include, but are not limited to:

1. Cultivation Approach to Individual Strains of Medical Marihuana

Each strain will be cultivated with a specifically-tailored timetable. It is known that each strain requires a unique schedule for its bloom phase (when the extractable resins are produced). Each strain has different needs in terms of nutrients and fertilizers. Citiva Medical will seek to optimize the cultivation environment allowing each strain to efficiently produce the expected cannabinoid levels.

2. Automated Systems

An automated system of environmental control, irrigation, and fertigation will be implemented to optimize conditions and decrease environmental variations that could subtly negatively affect crop health. Described in detail in other sections, examples of these automated systems include:

a. Medical marihuana will be grown using an automated system for irrigation and fertigation.

b. This system will ensure that all plants of the same strain will feed for the same amount of time and from the same nutrient mix.

c. Each nutrient solution will be checked daily prior to feeding in order to verify the integrity of the nutrient content within a strict five parts per million tolerance.

d. The pH (acidity/alkalinity) of the solution will also be closely monitored, and will be verified before each application of the nutrient solution so as to ensure that the nutrients are available to the plant.

e. All monitoring devices will be re-calibrated once per week.

f. Each plant will undergo a one week flush period with sub-5 ppm reverse osmosis filtered water to eliminate the possibility of any excess nutrients remaining in the soil prior to harvest.

g. Hard metals and any tap water based contaminants are removed by the high-flow reverse osmosis water filtration system which ensures a consistently clean potable water.

3. Plant Health Maintenance

Citiva Medical also has instituted a Plant Health Maintenance procedure to be used by its Cultivation Manager and supporting cultivation staff. Examples of the types of Plant Health Maintenance activities are:

a. Ensure flower room lamps are in accordance with designated lighting schedule.

b. Ensure desired A/C thermostat temperatures are set and holding temperatures.

c. Ensure humidity is in desired range.

d. Empty dehumidifiers if necessary.

e. Ensure all ventilation fans are operational.

f. Analyze all plants that are currently photosynthesizing for feeding needs.

g. Check water level, ppm and pH in feed reservoirs prior to feeding and adjust as necessary.

h. Document all adjustments made and include pre and post settings/readings.

i. Inspect all plants for insects, mold and general health.

j. Ensure all recirculating pumps within the reservoirs are not clogged with debris.

k. Ensure that all air stones in reservoirs are injecting air into the nutrient solution.

l. Ensure that desired CO_2 levels are in range / check CO_2 burners to ensure they are functional.

m. Inspect all plants for overcrowding and pruning needs.

n. Inspect all clones for feeding needs, root development and vegetative growth.

o. Inspect all harvested plants for moisture content.

p. Inventory check.

4.4.5 BIOSECURITY PLAN

An integral part of the design and operation of the Cultivation Facilities is Biosecurity. Crop Biosecurity is defined as a set of preventive measures to reduce risk to the crop from insects and microorganisms (fungi, bacteria and viruses). An overall goal of the approach is to reduce the incidence of Cultivation Facility pests and disease to an absolute minimum. Included in the Biosecurity measures is an Integrated Pest Management (IPM) approach An integrated pest management (IPM) strategy consistent with the USDA National Organic Program (NOP) guidelines will be used in this project to prevent and control plant pests and pathogens. In the unlikely event that it is necessary to deal with disease and pests in the Cultivation Facilities, our approach is based solely on control agents certified by OMRI (Organic Materials Review Institute) and the State of New York. As a registered organization (RO), Citiva Medical will identify pesticides, fungicides, and herbicides we wish to use, if needed, and obtain New York State approval prior to use. Only State-certified applicators will be used or contracted to apply the OMRI-certified agents, if necessary. We base our approach on our Five Principles for Biosecurity. Our Five (5) Principles for Biosecurity in our Cultivation Facilities are described in the Biosecurity Plan in Section 1.

4.4.6 TESTING AND SCREENINGS

Citiva Medical will internally test plant material, sub-lots, ingredients, extracts and resulting final products to ensure that its approved medical marihuana products are safe and meet Product Quality Standards. Independent Laboratory testing will also be conducted on a regular basis and as requested by the New York State Department of Health of Health.

4.5 APPROACH TO PROCESSING AND EXTRACTION FACILITY WITH A CLEAN ROOM ENVIRONMENT TO ENHANCE PRODUCT QUALITY

A key feature of the Processing and Extraction Facility is its Clean Room Environment. Citiva Medical shall aid Product Quality by ensuring that its Processing Facility is built to implement a true Clean Room Environment. Producing the final approved medical marihuana products in a Clean Room Environment minimizes the opportunities for contamination of the stock materials during processing. The Clean Room Environment is characterized by the following:

a. ISO 8, Class 100,000 clean room with 15-20 air changes per hour in the manufacturing area, and half such amount of air changes in cleanroom gowning area featuring appropriate furniture, coordinated with professionals active with the State of New York.
b. A properly pressurized cleanroom (pressurized to .02”-.04” W.G. so as to prevent pestilence and outside debris from entering the process, and thus ensuring a “pure” product.
c. A more “laminar” flow of clean, conditioned air within the space will wash the production area with clean air and prevent debris from entering the process.
d. Proper placement of low wall returns will capture any particulate that may enter through personnel or process, and will provide a layer of protection for the product.
e. Clean conditioned air will provide comfort for personnel within the space so as to minimize particulate and bio burden (e.g., sweat, skin squams) that can be absorbed by the product.

f. By nature, extraction is a dirty process characterized by oils and other debris entering the air stream. By supplying air through HEPA Filters of Fan Powered HEPA units (FFU's), and recirculating the conditioned air (recirculating includes mixing the return air with fresh outside air), much of the impurities (oil, duct, etc.) will be removed from the space creating a cleaner environment.

g. A cleanroom environment will also provide less waste in the process as a clean (and easy to clean) space will allow for any spilled product to be easily contained and recycled for use.

h. Carbon/MERV filters on the air handing unit will also remove many odors associated with the process and prevent any disturbance to nearby neighbors.

i. The walls will be cleanroom wall panels (walls coated with a smooth faced FRP (glassboard) material as in the below attachments) to create a smooth, progressive and easy to clean surface that the New York State Department of Health of Health will appreciate. Such material is FDA-compliant and has been tested against some of the harshest cleaning compounds found in the Pharma industry. Since the extraction process will involve heat and moisture, in addition to the presence of organic substances, mold growth potential is a risk. However, these walls can easily be cleaned to prevent the growth and spreading of mold.

j. A properly designed air delivery system will also help with controlling mold.

k. A cleanroom ceiling system (900 square feet of cleanroom ceiling grid with vinyl faced tiles) together with gaskets and sealed light fixtures (8 to 10) will prevent any particulate or pestilence from entering the space. The ceiling tiles will be vinyl faced gypsum with sealed edges and can be easily "swiffered" for cleaning.

l. The same walls and ceiling system in the kitchen would be well received and provide an aseptic look to the kitchen that will be well received by the New York State Department of Health.

The following basic schematic shows the air path through a cleanroom:

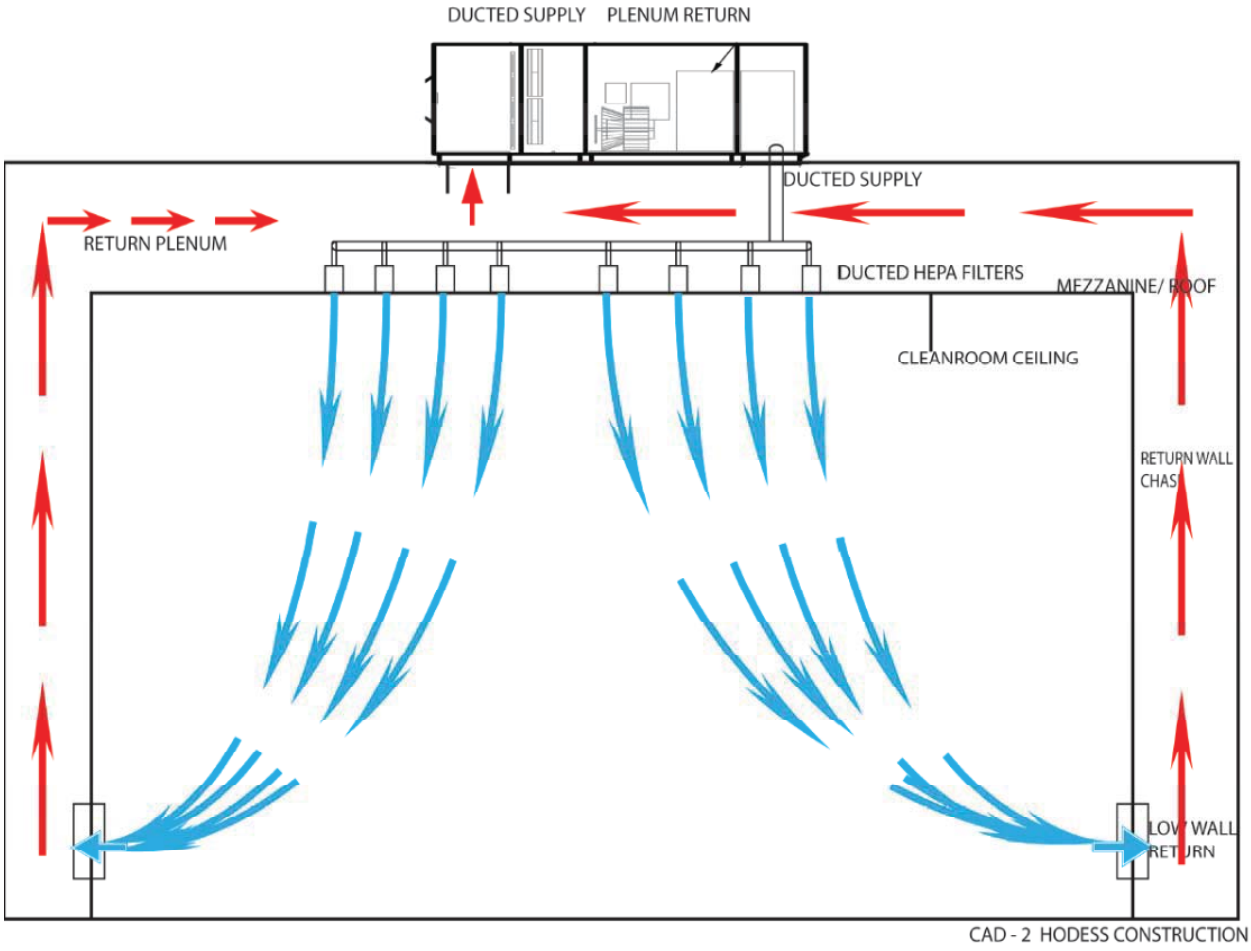

4.6 ISSUE INVESTIGATION AND CORRECTIVE ACTIONS AND PREVENTIVE ACTIONS

All Product Quality problems will be investigated. The in-house Citiva Medical Laboratory will conduct tests to confirm Product Quality. Additionally, an outside independent, State-licensed laboratory will also be enlisted to conduct tests. If results are out of specifications, an investigation will initially occur to insure that the test result obtained is a valid test result and not the result of analyst, equipment or method errors. Once determined to be valid and confirmed, an Investigation will be initiated to determine the root cause of the issue. The Investigation will follow the Citiva Medical procedure on performing and documenting a deviation investigation which includes tools for determining the root cause of the deviation. Once determined, the investigation process results in determining, where possible, Corrective and Preventive Actions to correct the root cause and help prevent the issue from occurring again.

4.7 QUALITY CONTROL PROGRAM

4.7.1 TEST METHODS

Laboratory Methods used at Citiva Medical will be compendia or validated in-house methods. Test

Methods are Controlled Documents and therefore will be formally written, approved and maintained. Test Methods are to be followed at all times, unless with approval of the laboratory Manager, documented by a note on the test records or Lab Notebook.

4.7.2 LAB NOTEBOOKS

Laboratory notebooks will be maintained for all instruments and a log of use and maintenance will be maintained. Logbooks may also be used for documenting routine operation of common laboratory equipment, such as for pH Meter standardizations. Notebooks may be maintained by analysts to record daily activities, solution preparations, etc.

4.7.3 OUT OF SPECIFICATION RESULTS

Out of Specification test results will be formally documented and investigated to determine the root cause of the result. The investigation should follow FDA Guidelines for Laboratory Out-of-Specification Results. The investigation should determine if the root cause is related to an instrument issue, an analyst error, an issue with the method, an issue with the instrument or some other cause. A Root Cause that is preventable will result in Corrective and/or Preventive Actions to prevent reoccurrence of the cause.

4.7.4 TEST RECORDS AND DATA

All laboratory test records, including, but not limited to, Lab Notebooks, Test Results, OOS Reports, etc., will be retained for a period of at least 5 years. Laboratory records include all raw data in computer software operating instruments such as HPLCs and GCs. This data should be retained either on a server back up or burned to DVD discs.

4.7.5 REFERENCE STANDARDS

The Citiva Medical Laboratory will have a system and procedure to order, receive, store, maintain inventory and use Reference Standards used in the testing of the product. The system will include maintaining a file of the standard's Certificates. Reference Standard lot number will always be recorded as part of any test record that uses standards.

CITIVA MEDICAL LLC

MEDICAL MARIHUANA PROGRAM

ATTACHMENT D

OPERATING PLAN – SECTION 10 – Recordkeeping

SECTION 10

Recordkeeping

Citiva Medical LLC

1 TABLE OF CONTENTS

2 OVERALL APPROACH TO RECORD KEEPING 2

2.1 PLANS……...…….2

2.2 PROCEDURES……...3

2.2.1 PRODUCTION AND MATERIAL MANAGEMENT……..3

2.2.2 BUSINESS CONTINUITY AND RECORD RETENTION…….…….4

2.2.3 DATA SECURITY…….……5

2.3 SYSTEMS…….……..5

2.4 EXHIBITS……..……7

2.4.1 WIDE AREA NETWORK……..……...7

2.4.2 INTERNET CONNECTIVITY…….…….8

2 OVERALL APPROACH TO RECORD KEEPING

Record keeping encompasses all activities and data related to transaction processing, inventory, manufacturing, accounting and regulatory reporting, and is managed by the Chief Financial Officer ("CFO"). The CFO is ultimately responsible for the accuracy of information derived from Citiva Medical's record keeping and transaction processing systems and serves as the primary custodian and point of governance for Citiva Medical's informational assets. In this capacity, the CFO will implement, keep and maintain sufficient controls to ensure proper use of, and access to Citiva Medical's business records (as described herein).

2.1 PLANS

One of the core components of Citiva Medical's operating plan is to deploy enterprise-class business software to manage key business functions. These functions include: inventory and warehouse management, accounting operations, manufacturing and procurement, and apply to every stage of producing and distributing medical marihuana. Citiva Medical has evaluated traditional enterprise resource planning (ERP) software suites as well as options that cater to the specialized needs of the medical marihuana vertical, in particular, cultivating, processing, manufacturing, delivery, transporting, distributing, sale and dispensing of medical marihuana products.

Citiva Medical's functional requirements for its selected business software platform include: compliance with all applicable requirements for regulatory reporting and electronic data interchange (e.g. full support of common EDI transaction sets and integration with New York State's I-STOP program), comprehensive LOT tracking and recall functionality, HIPPA compliance for data security and access to patient information, perpetual inventory management and reconciliation, SKU-level and product roll-up costing, flexible warehouse configuration, support of multi-level bills of material to support Seed-to-Sale LOT tracking, formula version control, advanced production planning and forecasting, cost center and consolidated financial reporting and business intelligence features and key performance indicator reporting.

In addition to the above functional requirements, Citiva Medical will evaluate business software options to ensure that the selected technology platform will effectively scale to meet its future business needs. Specific technology requirements include: utilization of an open, tier-one relational database (e.g. Oracle, MS SQL, MySQL), database encryption, thin client architecture to support full-feature application access over broadband Internet links, client/server data encryption to support HIPPA privacy requirements for electronic private health information (EPHI), and transaction-level auditing.

To facilitate Citiva Medical's ability to rapidly scale the size of its operation, all business systems will be hosted using a cloud-based service provider. Citiva Medical intends to select an enterprise-grade cloud-service host such as Amazon Web Services or Microsoft Azure for all of its core business systems.

Citiva Medical's corporate network will utilize an advanced virtual network infrastructure design to ensure application availability and data security. Citiva Medical facilities will be interconnected using an encrypted virtual private network (VPN) to ensure utmost security and control over EPHI

and company data. Citiva Medical's corporate network will be continually monitored for bandwidth utilization and application service-level performance. In addition, a centralized intrusion detection/prevention system will be implemented to proactively monitor and log network traffic and mitigate detected network intrusion and denial of service events. Citiva Medical's network design will provide a robust, secure corporate network infrastructure with advanced disaster recovery capabilities to meet or exceed industry best practices for manufacturers and distributers of pharmaceutical grade products and preparations.

Citiva Medical will follow a comprehensive data security policy to codify the foregoing and ensure ongoing compliance with its general operating procedures, HIPPA privacy requirements for EPHI and industry best practices as described in *NIST Special Publication 800-53 rev 4.* (National Institute of Standards and Technology, April 2013). In addition, and in anticipation of future federal guidelines and mandates, Citiva Medical will validate its data security policy with the requirements set forth in Federal Regulation Title 21 Part 11 (21 CFR Part 11) as they relate to electronic records and electronic signatures.

2.2 PROCEDURES

Operational procedures related to recordkeeping and information management are reflected in Citiva Medical's standard operating procedures (SOPs). Although distinct for each business function, Citiva Medical's SOPs will be consistent regarding record keeping and data security. Citiva Medical's SOPs are designed to be consistent with industry standard protocols and guidelines (e.g. GAAP, FASB, APICS) and to ensure compliance with its internal control system governing cultivating, processing, manufacturing, delivery, transporting, distributing, sale and dispensing of medical marihuana products.

2.2.1 PRODUCTION & MATERIAL MANAGEMENT

Citiva Medical's operating plan requires comprehensive visibility and control over all aspects of material management, product formulation, manufacturing and distribution. To meet this requirement, Citiva Medical's recordkeeping system will capture and record all of the processes mentioned above.

Materials management relative to cultivation and processing of medical marihuana products will be a vital component of Citiva Medical's record keeping system. Following are summary descriptions of the primary material handling functions and activates which interface to Citiva Medical's recordkeeping systems:

- Procurement – The procurement activity encompasses inventory management for the materials required in the production of medical marihuana. Specific activities include: monitoring on-hand inventory balances against defined stock level reorder points, issuing purchase orders, preparing and maintaining vendor contracts, qualifying and recertifying vendors, remediating identified vendor quality and service-level problems, managing certificate of analysis (COA) specifications and recordkeeping for pending and received COAs for materials.
- Material Receipt – The receipt activity encompasses physical or virtual receipt of any material or intermediate compound, used in the production of medical marihuana. This activity

includes items received from vendors or produced internally as an intermediate item or compound used in the production of medical marihuana products.

- Material Put-Away – The put-away activity encompasses the physical movement of raw materials, intermediate compounds or finished goods items. In general, this activity applies to the movement of inventory items (such as plant clippings, marihuana extract compounds or packaging materials) from a designated staging location to a designated storage location.
- Material Issuance – The issuance activity encompasses the physical movement or virtual allocation of materials (such as plant clippings, marihuana extract compounds or packaging materials) from a storage location to a processing area or materials allocated to a planned work or sales order.
- Material Return – The return activity encompasses the physical return of raw materials, work-in-process compounds or finished goods items from the receiver to the issuer. In general, this activity applies to the internal return of inventory items from a processing or staging area to a storage location, however the process also applies to finished goods items in the event of a partial or full recall of medical marihuana products. The primary purpose of the return activity is to provide a closed-loop process whereby inventory can be tracked and the chain of custody for each inventory item is recorded along with associated item LOT information.
- Shipment – The shipment activity encompasses the physical or virtual movement of raw material items, intermediate compounds or finished goods medical marihuana products from one stage of cultivation or production to another, or when dispensing of medical marihuana product to a patient. Like the return activity, the primary purpose of the shipment activity is to provide a closed-loop process whereby inventory can be tracked and the chain of custody for each inventory item is recorded.

2.2.2 BUSINESS CONTINUITY & RECORD RETENTION

Citiva Medical will build-in robust disaster recovery capabilities into its corporate network design. Citiva Medical will use a virtual network infrastructure to provide data center redundancy between geographically distributed server clusters utilizing synchronous data replication. This capability will enable flexible recovery options and ensure the rapid resumption of normal business operations in the event of a disaster or contingency situation.

Citiva Medical conducted a due diligence review of available internet service providers (ISPs) offering broadband internet services within the locality of each planned Citiva facility. For this review, Citiva evaluated ISPs based on their backbone network connectivity to the Internet (tier level), service level options for customers and the network topology utilized to connect subscribers to central office hubs. Citiva utilized The National Broadband Map [1] (NBM), an independent, government sanctioned resource, to identify ISP's currently offering broadband Internet services to each Citiva facility (see exhibit 2).

Citiva Medical will utilize a unified combination of on-line, near-line and off-line backup for all data related to business and patient data. This capability will enable secure, transaction-level and point-in-time restore capabilities for all business and patient data. All backup data will be encrypted prior to

[1] The National Telecommunications and Information Administration (NTIA) created the NBM, in collaboration with the Federal Communications Commission (FCC), and in partnership with 50 states, five (5) territories and the District of Columbia. The NBM is part of NTIA's State Broadband Initiative. The NBM is updated approximately every six (6) months and was first published on February 17, 2011.

upload to backup devices and will, at all times, remain encrypted on backup media and remain in the exclusive control of Citiva Medical. All business and patient data backups will be retained for a minimum period of seven (7) years.

2.2.3 DATA SECURITY

Citiva Medical will follow the guidelines set forth in *NIST Special Publication 800-53 rev 4.* When developing its data security policy. Citiva Medical's data security policy will address threats including hostile cyber attacks, natural disasters, structural failures, and human errors, and will represent an organization-wide process to manage information security and privacy risk. Citiva Medical will qualify its data security plan via an independent assessment and audit/validate its data security policy annually.

2.3 SYSTEMS

Business Systems

The New York State Department of Health (NYS DOH) has selected an inventory management software application, which satisfies the requirements under Section 1004.5 of the application to receive Registered Organization (RO) status to produce and dispense medical marihuana. Citiva Medical will utilize the system mandated under the terms of the RO status qualification, to implement a comprehensive and integrated Seed-to-Sale business system platform that meets all regulatory and business requirements. Prior to implementation of the New York State Department of Health selected software application, Citiva Medical will evaluate the features and functionality of the selected system to identify any functionality gaps in meeting its overall business needs. Where gaps are identified, needed, Citiva Medical will select best-of-breed software options that can bridge identified gaps and also tightly integrate with the New York State Department of Health selected software application.

Citiva Medical will utilize the following usage scenarios and guideline rational to implement the New York State Department of Health selected software application and to identify any functionality gaps that need to be addressed prior to commencing operations:

- Batch Processing – Medical marihuana products are produced in specific batch sizes. As with any batch process, individual production batches will vary in terms of yield and strength of both active and inactive compounds.
- Lot Expiry – Medical marihuana products have a limited shelf life. Beyond their shelf life, medical marihuana products may not be sold or used.
- Lot Traceability – Full end-to-end traceability is a regulatory requirement for medical marihuana products. This means, for example, that where a specific batch of active ingredient is deemed to be suspect, all finished products containing that batch can be traced within every market, and recalled if necessary.
- Quality Management – Citiva Medical's comprehensive Quality Management (QM) program will be heavily information driven and reliant on transactional data derived from the procurement, warehousing, and customer service activities. QM activities will include: corrective and preventive actions, customer complaints, deviations, change control, training and certification.

- Supply Chain Management – Supply chain planning information is critical to the effective operation of the supply chain. Due to potential long raw material lead times, it is necessary to de-couple the normal linkage between supply and demand. This means that manufacturing must be driven by production forecasts (push system) while the distribution end is driven by consumption (pull system).
- Stock Keeping Units (SKU's) Scalability – Due to the nature of medical marihuana products, the active component of a product formulation is often packaged into dozens or more different stock keeping units (SKUs) when quantity per pack and market presentation variation is taken into consideration. As such, market demand must be forecasted at the SKU level for final distribution. Due to the inevitable volatility of market level forecasts, production plans must be translated into production forecasts for formulated products, as well as material forecasts for packaging component such as bottles, blisters, leaflets, labels and cartons.
- 21 CFR Part 11 Compliance – Title 21 of the Code of Federal Regulations, Part 11 deals with the Food and Drug Administration (FDA) guidelines on electronic records and electronic signatures (in anticipation of Federal guideline requirements in the future).

Voice Communications

Citiva Medical will utilize a voice over Internet protocol (VoIP) based telephone system in its production facility and each of its four (4) dispensaries. The VoIP telephone system will reduce physical cabling requirements and provide centralized management of wired and wireless telephone devices. In addition, the VoIP telephone system provides enhanced security of voice communications as compared to a traditional private branch exchange (PBX) telephone system. The local area network (LAN) in each Citiva Medical facility will be configured with separate virtual local area networks (VLANS) to isolate and prioritize network traffic for low latency applications such as digital voice and streaming video.

In addition the VoIP based telephone system, each Citiva Medical facility will be provisioned with four 'plain old telephone service' (POTS) lines. POTS lines will be used exclusively for central office alarm system monitoring and out-of-band management of programmable logic controls (PLCs) for heating, ventilation and cooling (HVAC).

Video Surveillance

Redacted Pursuant to N.Y. Public Officers Law, Art. 6

2.4 EXHIBITS

The following exhibits describe and depict Citiva Medical's planned wide area network (WAN) topology and a due diligence review of available Internet service provider offering broadband Internet connectivity to each Citiva Medical facility.

2.4.1 WIDE AREA NETWORK:

Citiva Medical's WAN will securely interconnect Citiva Medical facilities and the Citiva Medical WAN to a cloud-based applications over the Internet. The Citiva Medical WAN will be designed to ensure hi-availability and data security for application services and data storage. The local network of each Citiva Medical facility will be configured to fail-over to a backup Internet service provider (ISP) in the event of service disruption of the primary ISP. ISP fail-over will occur automatically and provide uninterrupted access to Citiva Medical's systems and application.

EXHIBIT 1:

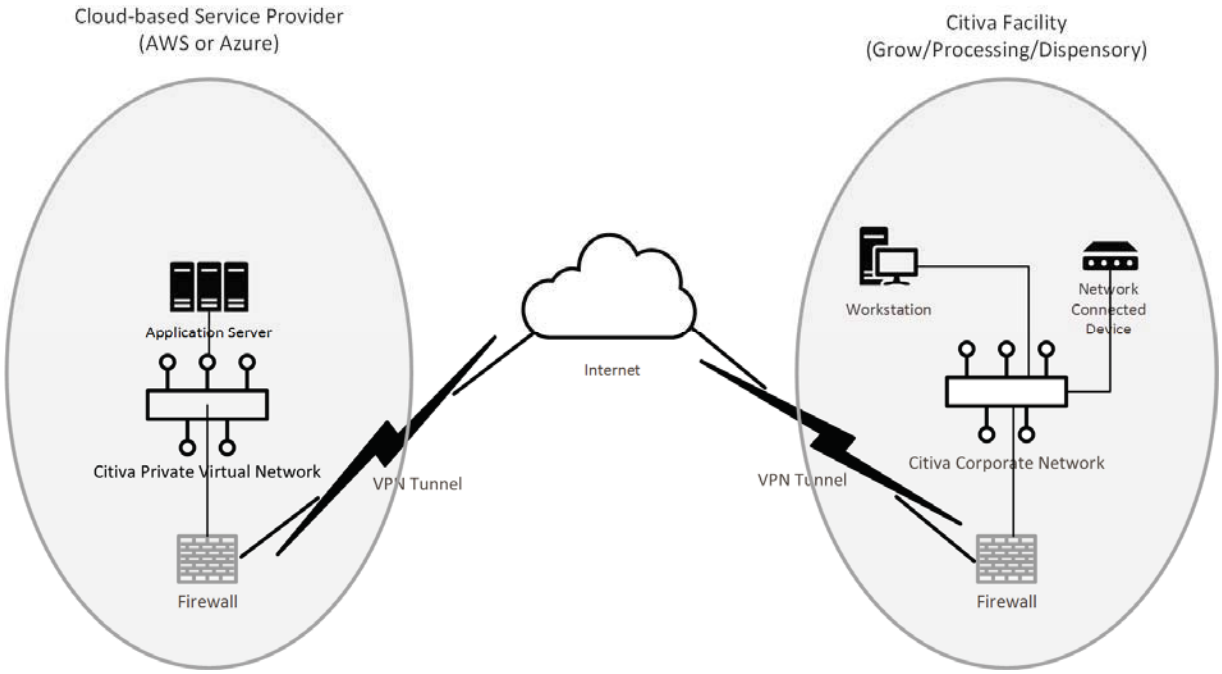

2.4.2 INTERNET CONNECTIVITY:

As a result of its due diligence market review, Citiva Medical's identified several ISPs offering broadband Internet connectivity to the street address of each planned facility. Following are the findings of Citiva Medical's ISP market review:

EXHIBIT 2:

Facility	Street Address	ISP	Services Provided
Processing/Manufacturing	5786 State Route 96 Romulus, NY 14541	Verizon Communications Inc.	Business class fiber optic, wired, wireless @ 10-25 Mbps.
		AT&T	Business class wired, wireless @ 10-25 Mbps.
		Time Warner Cable Inc.	Business class cable @ 50-100Mbps.
		Trumansburg Telephone Co.,	Business class wired @ 50 – 100 Mbps.
		Inc./Ontario Telephone Co., Inc.	
Dispensary 1	5788 East Circle Drive Cicero, NY 13039	Verizon Communications Inc.	Business class fiber optic, wired, wireless @ 100 -1000 Mbps.
		Time Warner Cable Inc.	Business class cable @ 50-100Mbps.
		T-Mobile	Business class wireless @ 10-25 Mbps.
		AT&T	Business class wired, wireless @ 10-25 Mbps.

Facility	Street Address	ISP	Services Provided
Dispensary 2	4 Hinchey Road, Rochester, NY 14624	Fibertech Networks, LLC	Business class fiber optic @ 100-1000 Mbps.
		Verizon Communications	Business class wireless @ 10-25 Mbps.
		Frontier Communications	Business class cable @ 25-50 Mbps.
		Corporation	
Dispensary 3	2290 South Rd, Poughkeepsie, NY 12601	Level 3 Communications, LLC	Business class fiber optic @ 1 Gbps. +
		Verizon Communications Inc.	Business class fiber optic, wired, wireless @ 100 -1000 Mbps.
		CSC Holdings	Business class cable @ 100-1000 Mbps.
Dispensary 4	35 1st Ave, New York, NY 10003	Time Warner Cable Inc.	Business class cable @ 50-100Mbps.
		Verizon Communications	Business class fiber optic, wired, wireless @ 10-25 Mbps.
		T-Mobile	Business class wireless @ 10-25.
		Business Only Broadband, LLC	Business class wired @ 10 – 25 Mbps.

CITIVA MEDICAL LLC

MEDICAL MARIHUANA PROGRAM

ATTACHMENT E

ORGANIZATIONAL AND OPERATIONAL DOCUMENTS

CITIVA MEDICAL LLC

OVERVIEW OF LEGAL DOCUMENTS

In November 2014, several individuals involved in this project joined together and established Citiva LLC within the State of Delaware in order to begin preparing for New York's expected Application for Registration as a Registered Organization. In February 2015, these individuals were advised to use a business entity within the State of New York. Consequently, they formed Citiva Medical LLC within New York State. It should be known that the Audited Financial Statement provided as part of this Application (under Attachment I) is for "Citiva Medical LLC and Affiliate", inclusive of both aforementioned entities, in order to properly account for the period of time when the aforementioned individuals were using the Delaware company. However, Citiva LLC, the Delaware corporation, is essentially dormant and has nothing to do with this Application.

Please refer to the enclosed Corporate Organizational Chart for information on the ownership structure of the applicant. Specifically, the ownership in Citiva Medical LLC includes natural persons and two (2) separate corporate entities (Empire Choice LLC and VG – Citiva Medical Holdings, LLC). Empire Choice LLC is a New York State Limited Liability Company that is owned by Anna Dykshteyn, Simon Field and Kim Volman. VG – Citiva Medical Holdings, LLC is a New York State Limited Liability Company that is owned by VG Capital Group LLC [redacted] VG Capital Group LLC is owned by 20 different trusts, as listed within the Operating Agreement of VG Capital Group LLC under this Attachment.

Consequently, the following documents are enclosed as part of this Attachment:

- Organizational Chart – Corporate
- Organizational Chart – Operations
- Legal Documents – Citiva Medical LLC
  - Articles of Organization
  - Documentation of IRS Filing
  - Amended and Restated Limited Liability Operating Company Agreement
- Legal Documents – Citiva LLC (Delaware)
  - Certificate of Formation (only document ever created for this entity)
- Legal Documents – Empire Choice LLC
  - Articles of Organization
  - Limited Liability Operating Company Agreement
- Legal Documents – VG – Citiva Medical Holdings, LLC
  - Articles of Organization
  - Limited Liability Operating Company Agreement
- Legal Documents – VG Capital Group LLC
  - Articles of Organization
  - Limited Liability Operating Company Agreement

ARTICLES OF ORGANIZATION
OF
Citiva Medical LLC

Under Section 203 of the Limited Liability Company Law

FIRST: The name of the limited liability company is:

Citiva Medical LLC

SECOND: The county, within this state, in which the office of the limited liability company is to be located is RICHMOND.

THIRD: The Secretary of State is designated as agent of the limited liability company upon whom process against it may be served. The address within or without this state to which the Secretary of State shall mail a copy of any process against the limited liability company served upon him or her is:

C T CORPORATION SYSTEM
111 8TH AVENUE
NEW YORK, NY 10011

FOURTH: The limited liability company designates the following as its registered agent upon whom process against it may be served within the State of New York is:

C T CORPORATION SYSTEM
111 8TH AVENUE
NEW YORK, NY 10011

I certify that I have read the above statements, I am authorized to sign these Articles of Organization, that the above statements are true and correct to the best of my knowledge and belief and that my signature typed below constitutes my signature.

Frank Turano, Organizer (signature)

Frank Turano , ORGANIZER

DEPARTMENT OF THE TREASURY
INTERNAL REVENUE SERVICE
CINCINNATI OH 45999-0023

Date of this notice: 02-05-2015

Employer Identification Number:
[redacted]

Form: SS-4

Number of this notice: CP 575 G

CITIVA MEDICAL LLC
FRANK TURANO SOLE MBR
[redacted]

For assistance you may call us at:
1-800-829-4933

IF YOU WRITE, ATTACH THE
STUB AT THE END OF THIS NOTICE.

WE ASSIGNED YOU AN EMPLOYER IDENTIFICATION NUMBER

Thank you for applying for an Employer Identification Number (EIN). We assigned you EIN [redacted] This EIN will identify you, your business accounts, tax returns, and documents, even if you have no employees. Please keep this notice in your permanent records.

When filing tax documents, payments, and related correspondence, it is very important that you use your EIN and complete name and address exactly as shown above. Any variation may cause a delay in processing, result in incorrect information in your account, or even cause you to be assigned more than one EIN. If the information is not correct as shown above, please make the correction using the attached tear off stub and return it to us.

A limited liability company (LLC) may file Form 8832, *Entity Classification Election*, and elect to be classified as an association taxable as a corporation. If the LLC is eligible to be treated as a corporation that meets certain tests and it will be electing S corporation status, it must timely file Form 2553, *Election by a Small Business Corporation*. The LLC will be treated as a corporation as of the effective date of the S corporation election and does not need to file Form 8832.

To obtain tax forms and publications, including those referenced in this notice, visit our Web site at www.irs.gov. If you do not have access to the Internet, call 1-800-829-3676 (TTY/TDD 1-800-829-4059) or visit your local IRS office.

IMPORTANT REMINDERS:

* Keep a copy of this notice in your permanent records. **This notice is issued only one time and the IRS will not be able to generate a duplicate copy for you.** You may give a copy of this document to anyone asking for proof of your EIN.

* Use this EIN and your name exactly as they appear at the top of this notice on all your federal tax forms.

* Refer to this EIN on your tax-related correspondence and documents.

If you have questions about your EIN, you can call us at the phone number or write to us at the address shown at the top of this notice. If you write, please tear off the stub at the bottom of this notice and send it along with your letter. If you do not need to write us, do not complete and return the stub.

Your name control associated with this EIN is CITI. You will need to provide this information, along with your EIN, if you file your returns electronically.

Thank you for your cooperation.

(IRS USE ONLY) 575G 02-05-2015 CITI O 9999999999 SS-4

Keep this part for your records. CP 575 G (Rev. 7-2007)

Return this part with any correspondence
so we may identify your account. Please
correct any errors in your name or address.

CP 575 G

9999999999

Your Telephone Number
( ) -
_____

Best Time to Call
_____

DATE OF THIS NOTICE: 02-05-2015
EMPLOYER IDENTIFICATION NUMBER: [redacted]
FORM: SS-4 NOBOD

INTERNAL REVENUE SERVICE
CINCINNATI OH 45999-0023

CITIVA MEDICAL LLC
FRANK TURANO SOLE MBR
[redacted]

EXECUTION COPY

AMENDED AND RESTATED

LIMITED LIABILITY COMPANY OPERATING AGREEMENT

OF

CITIVA MEDICAL LLC

Dated as of April 10, 2015

THE UNITS HAVE NOT BEEN REGISTERED UNDER ANY FEDERAL OR STATE SECURITIES LAWS AND CANNOT BE SOLD, TRANSFERRED, ASSIGNED, HYPOTHECATED, PLEDGED OR OTHERWISE DISPOSED UNLESS THEY ARE REGISTERED THEREUNDER OR EXEMPTIONS FROM SUCH REGISTRATIONS ARE AVAILABLE, AND THE REQUIREMENTS OF THIS LIMITED LIABILITY COMPANY AGREEMENT ARE SATISFIED.

TABLE OF CONTENTS

Page

ARTICLE 1 FORMATION AND ORGANIZATION 1

Section 1.1. Formation 1
Section 1.2. Basic Rights of Members 1
Section 1.3. Name 1
Section 1.4. Term 1
Section 1.5. Business 2
Section 1.6. Principal Place of Business 2
Section 1.7. Registered Office and Agent 2

ARTICLE 2 UNITS AND CAPITAL CONTRIBUTIONS 2

Section 2.1. Units 2
Section 2.2. Issuance of Additional Units 3
Section 2.3. Initial Capital Contributions 3
Section 2.4. Units as Securities 3
Section 2.5. Preemptive Right 3
Section 2.6. Return on Capital Contributions 5
Section 2.7. Member Listing and Further Actions 5
Section 2.8. No Liability 5
Section 2.9. No Deficit Restoration 5

ARTICLE 3 DISTRIBUTIONS 5

Section 3.1. Distributions 5
Section 3.2. Tax Distributions 6
Section 3.3. Withholding 6

ARTICLE 4 MANAGEMENT OF COMPANY 6

Section 4.1. Management and Authority 6
Section 4.2. Manager Voting Rights 7
Section 4.3. Decisions Requiring Unanimous Approval of Managers 8
Section 4.4. Action without Meeting 8
Section 4.5. Manager and Management Committee Liability 8
Section 4.6. Duty of Loyalty 9
Section 4.7. Standard of Conduct 9
Section 4.8. No Exclusive Duty and Non-Competition 9

ARTICLE 5 RIGHTS AND OBLIGATIONS OF MEMBERS 10

Section 5.1. Member Liability for Company Debt 10
Section 5.2. No Partition 10
Section 5.3. No Right to Act 10

Page

Section 5.4. Other Business Activity 10
Section 5.5. Non-Competition 11
Section 5.6. Confidential Information and Materials 11

ARTICLE 6 REPRESENTATIONS OF MEMBERS 12

Section 6.1. Representations of each Member 12
Section 6.2. Securities Laws Representations 13

ARTICLE 7 TRANSFERS OF MEMBERSHIP INTERESTS 14

Section 7.1. General Restrictions 14
Section 7.2. Transfer of Membership Interests; Permitted Transferees 14
Section 7.3. Right of First Refusal in Sale of Member's Units. 14
Section 7.4. Company's Right to Purchase upon the Occurrence of a Triggering Event 16
Section 7.5. Transfer Requirements Regarding Membership Interest 17
Section 7.6. Compelled Sale Right 18
Section 7.7. General Rules 19

ARTICLE 8 INDEMNIFICATION 19

Section 8.1. Indemnification 19
Section 8.2. Advancement of Expenses 20
Section 8.3. Contract with the Company 20
Section 8.4. Non-exclusivity of Rights 20
Section 8.5. Insurance 21
Section 8.6. Savings Clause 21

ARTICLE 9 FINANCIAL AND ACCOUNTING MATTERS 21

Section 9.1. Books and Records 21
Section 9.2. Inspection of Books and Records 22
Section 9.3. Bank Accounts 22
Section 9.4. Annual and Quarterly Financial Statements. 22

ARTICLE 10 TAX MATTERS 23

Section 10.1. Taxation as Partnership 23
Section 10.2. Capital Accounts; Tax Allocations 23
Section 10.3. Tax Matters Partner 23
Section 10.4. Tax Returns; Tax Elections 24

ARTICLE 11 DISSOLUTION AND WINDING UP 24

Section 11.1. Events Resulting in Dissolution 24
Section 11.2. Procedure. 25

Page

ARTICLE 12 NOTICES 25

Section 12.1. Notices 25
Section 12.2. Addresses for Notices 25

ARTICLE 13 MISCELLANEOUS 26

Section 13.1. Entire Agreement 26
Section 13.2. Amendments 26
Section 13.3. Amendment by Agreement of Merger 26
Section 13.4. Successors and Assigns 26
Section 13.5. No Third Party Beneficiaries 26
Section 13.6. Governing Law 26
Section 13.7. Jurisdiction; Choice of Forum 26
Section 13.8. Waiver of Jury Trial 27
Section 13.9. Severability 27
Section 13.10. Captions and Construction 27
Section 13.11. Further Assurances and Execution of Additional Documents 27
Section 13.12. Counterparts 27

SCHEDULES AND EXHIBITS

Schedule A — List of Members

Exhibit A — Definitions
Exhibit B — Joinder Agreement
Exhibit C — Capital Accounts; Tax Allocations

AMENDED AND RESTATED

LIMITED LIABILITY COMPANY OPERATING AGREEMENT

OF

CITIVA MEDICAL LLC

This **AMENDED AND RESTED LIMITED LIABILITY COMPANY OPERATING AGREEMENT** (this "**Agreement**") is dated as of April 10, 2015 ("**Effective Date**") and is made by and among the members set forth on Schedule A attached hereto, and each other person who hereafter is admitted to the Company as a Member (as defined herein) in accordance with the terms hereof. Exhibit A to this Agreement sets forth the definitions of capitalized words and phrases used in this Agreement (unless otherwise expressly provided herein).

RECITALS

WHEREAS, the Parties hereto have formed a limited liability company (together with any successor limited liability company, the "**Company**") under the New York Act and upon the terms and conditions of this Agreement; and

WHEREAS, the Parties hereto desire to set out in this Agreement their respective rights, obligations and duties with respect to the Company and how the business, management and operations of the Company shall be managed.

NOW, THEREFORE, in consideration of the terms, covenants and conditions contained herein, the Parties hereby agree as follows:

ARTICLE 1

FORMATION AND ORGANIZATION

Section 1.1. Formation. The Company was formed as a limited liability company on February 3, 2015 by the filing of its Articles of Organization with the New York Secretary of State pursuant to the New York Act.

Section 1.2. Basic Rights of Members. The Members intend and agree that this Agreement is for all purposes the "limited liability company operating agreement" of the Company as defined in the New York Act.

Section 1.3. Name. The business of the Company shall be conducted under the name "CITIVA MEDICAL LLC" or such other name as the Management Committee may hereafter determine.

Section 1.4. Term. The existence of the Company commenced on the date of filing its Articles of Organization and shall continue until dissolved in accordance with Article 11 of this Agreement or upon the entry of a decree of judicial dissolution under Section 701(a) of the New York Act.

Section 1.5. Business. The business of the Company is to (a) grow, cultivate, manufacture, develop, produce, extract, sell, market, acquire, possess, deliver, transport, distribute, dispense, license or sublicense medical marijuana, medical grade cannabinoid compounds and related intellectual property, including proprietary seeds, (b) do any and all other acts or things that may be incidental or necessary to carry on the business of the Company as described in clause (a) above and all things that the Management Committee may deem necessary, desirable, advisable, expedient, convenient for, incidental or appropriate to the furtherance and accomplishment of the foregoing purposes, and (c) engage in any other lawful act or activity for which limited liability companies may be formed under the New York Act.

Section 1.6. Principal Place of Business. The principal place of business of the Company shall be located at 7378 Amboy Road, Staten Island, NY 10307, or at such other location as shall be determined by the Management Committee. The Company may have such other business offices within or without the State of New York.

Section 1.7. Registered Office and Agent. The name and street address within New York of the registered agent of the Company upon whom and at which process against the Company can be served is: CT Corporation System, 111 Eighth Avenue, New York, New York 10011. The registered agent may be changed from time to time by the Management Committee upon the filing of the name and address of the new registered agent with the New York Secretary of State pursuant to the New York Act.

ARTICLE 2

UNITS AND CAPITAL CONTRIBUTIONS

Section 2.1. Units. Membership Interests in the Company shall be represented by "**Units**" as set forth on Schedule A, as amended from time to time in accordance with this Agreement. Units shall not be represented by certificates. Units shall be in one of three Classes consisting of "**Common Units**," "**Class A Units**" or "**Incentive Units**" and all Units of a Class shall have identical rights in all respects as all other Units of such Class, except as otherwise set forth in this Agreement. Units may be issued or held in fractional amounts.

(a) Common Units. Common Units shall not entitle the holder(s) thereof to voting rights unless expressly provided under this Agreement or the New York Act. It is intended by the Members that the Common Units shall entitle the holders thereof to share in the income, gains, losses, deductions, credit, or similar items of, and to receive distributions from, the Company as set forth in this Agreement.

(b) Class A Units. The Class A Units shall not entitle the holder(s) thereof to voting rights unless expressly provided under this Agreement or the New York Act. It is intended by the Members that the Class A Units shall entitle the holders thereof to share in the income, gains, losses, deductions, credit, or similar items of, and to receive distributions from, the Company as set forth in this Agreement.

(c) Incentive Units. The Incentive Units shall not entitle the holder(s) thereof to voting rights unless expressly provided under this Agreement or the New York Act. It is

intended by the Members that the Incentive Units shall entitle the holders thereof to share in the income, gains, losses, deductions, credit, or similar items of, and to receive distributions from, the Company as set forth in this Agreement. The Incentive Units shall be subject to such terms and conditions as may be set forth in the Grant Agreement with respect to such Incentive Units. The holders of Incentive Units shall not be obligated to make any cash Capital Contributions. It is intended that the Incentive Units shall constitute "profits interests" within the meaning of Revenue Procedures 93-27 and 2001-43, and the Grant Agreement associated with each such Incentive Unit shall establish a "threshold amount," which shall constitute the minimum aggregate distribution that must be made to the Units outstanding on the date of grant before such Incentive Unit shall participate in distributions pursuant to Section 3.1. Such threshold amount shall be at least equal to the fair market value of the Company as of the date of the grant of the Incentive Unit. Incentive Units may be structured to enable the Company to meet the requirements of the "liquidation value safe harbor" election within the meaning of the proposed revenue procedure of Notice 2005-43, 2005-24 I.R.B. 1, Proposed Treasury Regulations Section 1.83-3(l) or Proposed Treasury Regulations Section 1.704-1(b)(4)(xii) at such time as such proposed revenue procedure and Treasury Regulations are effective and the Management Committee shall have the authority to make any such other related amendments as may be required by pronouncements or Treasury Regulations issued by the Internal Revenue Service or Treasury Department after the date of this Agreement. Incentive Units shall be deemed to be "Vested Incentive Units" when the conditions to vesting set forth in the Grant Agreement that governs the issuance of such Incentive Units have been satisfied.

Section 2.2. Issuance of Additional Units. With the approval of the Management Committee and the other terms of this Agreement, the Company may issue additional Units in one or more classes to one or more Persons in such amounts and on such terms as the Management Committee shall determine. As a condition to the receipt of any such additional Units, any such Person that is not already Party to this Agreement shall be required to execute a Joinder Agreement in the form attached hereto as Exhibit B.

Section 2.3. Initial Capital Contributions. In consideration for the cash and other non-monetary assets the Members have contributed to the Company each Member initially shall have the number of Units set forth next to that Member's name on Schedule A hereto.

Section 2.4. Units as Securities. The Units shall constitute "securities" for purposes of Article 8 of the Uniform Commercial Code as the same may, from time to time, be in effect in the State of New York and "investment property" for purposes of Article 9 of the Uniform Commercial Code.

Section 2.5. Preemptive Right. In the event that the Company proposes to undertake an issuance or sale of additional Units ("**New Units**"), the Company shall provide written notice (the "**Preemptive Right Notice**") to each Member of such intention, describing the number and terms of the New Units proposed to be issued or sold, the price per New Unit and the general terms upon which the Company proposes to issue or sell the New Units. Each Member shall have fifteen (15) days from the date the Preemptive Right Notice is delivered to give the Company written notice of such Member's election to purchase all or any portion of such Member's share of such New Units for the price and upon the terms specified in the Preemptive Right Notice. Such Member's notice shall state the quantity of New Units such Member desires

to purchase. The delivery of such election notice by a Member shall constitute a binding obligation of such Member to purchase the New Units set forth in its election notice in accordance with the terms of this Section 2.5. In the event that a Member delivers such election notice and fails to pay the purchase price for the amount of New Units set forth in its election notice when due, such Member's right to participate in any future sales of New Units pursuant to this Section 2.5 shall terminate and the Company may elect to take any and all of the following actions: (i) revoke the purchase of New Units by such defaulting Member; and (ii) pursue a claim of damages against such defaulting Member for such default. Any Member who does not provide such notice to the Company within such fifteen (15) day period shall be deemed to have waived such Member's preemptive rights under this Section 2.5 with respect to such New Units, provided the Company consummates the issuance thereof within one hundred twenty (120) days after it provides the Preemptive Right Notice to the Members at a price equal to or higher than the price specified in the Preemptive Right Notice given to the Members by the Company under this Section 2.5. Each Member so electing to purchase New Units pursuant to this Section 2.5 shall be entitled to purchase his or its pro rata share of the number of New Units specified in the Preemptive Right Notice based on such electing Member's Ownership Percentage. Any New Units remaining thereafter may be issued by the Company within one hundred twenty (120) days after it provides the Preemptive Right Notice to the Members on terms no less favorable than those contained in the Preemptive Right Notice. Notwithstanding the foregoing, the authority of the Management Committee to issue New Units will not be subject to the restrictions and procedural requirements of this Section 2.5 in the following cases (each, an "**Exempt Unit Issuance**"):

(a) New Units issued to employees, officers or managers of, or consultants or advisors to the Company or any of its subsidiaries pursuant to a plan, agreement or arrangement approved by the Management Committee;

(b) New Units issued to banks, equipment lessors or other financial institutions, or to real property lessors, pursuant to a debt financing, equipment leasing or real property leasing transaction approved by the Management Committee;

(c) New Units issued to suppliers or Third Party service providers in connection with the provision of goods or services pursuant to transactions approved by the Management Committee;

(d) New Units issued pursuant to the acquisition of another corporation by the Company by merger, purchase of substantially all of the assets or other reorganization or to a joint venture agreement, provided, that such issuances are approved by the Management Committee;

(e) New Units issued in connection with sponsored research, collaboration, technology license, development, OEM, marketing or other similar agreements or strategic partnerships approved by the Management Committee; and

(f) New Units issued pursuant to the Company's offering of up to $25,000,000 of Class A Units after the date of this Agreement pursuant to a private placement

conducted under Rule 506 of Regulation D promulgated under the Securities Act of 1933, as amended.

Section 2.6. Return on Capital Contributions. Except as expressly provided in this Agreement, (a) no Member shall receive any return or distribution of its Capital Contributions, (b) no Member shall receive any interest or other return on or with respect to its Capital Contributions, and (c) no Member shall be entitled to withdraw any part of its Capital Contributions.

Section 2.7. Member Listing and Further Actions. In the event Units shall be issued to or transferred in accordance with the terms of this Agreements, to the extent necessary in the sole discretion of the Management Committee, the Management Committee shall cause Schedule A to this Agreement to be amended to reflect as appropriate the occurrence of any of the transactions referred to in this Article 2 or in Article 7 as promptly as is practicable after such occurrence.

Section 2.8. No Liability. Except as otherwise provided in the New York Act, or as specifically otherwise provided in this Agreement or in any other written agreement executed by such Member, no Member, as such, shall have any personal liability whatsoever to the Company, any of the other Members or any of the creditors of the Company for the debts, liabilities, contracts or other obligations of the Company (whether arising in contract, tort or otherwise) or any of the Company's losses beyond, with respect to a Member, such Member's Capital Contribution.

Section 2.9. No Deficit Restoration. The Members intend and agree that no Member shall be obligated to pay any deficit in its Capital Account to or for the account of the Company or any creditor of the Company.

ARTICLE 3

DISTRIBUTIONS

Section 3.1. Distributions.

(a) Timing. Distributions shall be made to the Members only after the Company has paid all Company Costs then due, paid all amounts then due for principal, interest, fees and other amounts required under any indebtedness of the Company then currently due and established all reasonable reserves which shall be approved or determined by the Management Committee in its sole and absolute discretion. Distributions shall be made at such times as the Management Committee shall determine.

(b) Distribution of Available Cash from Operations. All distributions of Available Cash from Operations, after complying with Section 3.1(a) shall be made to the Members, in accordance with such Member's Ownership Percentage, provided, however, distributions with respect to Incentive Units shall be subject to such restrictions contained in the applicable Grant Agreement.

(c) Distribution of Net Proceeds from a Capital Event. All distributions of Net Proceeds from a Capital Event shall be made as follows:

(1) *First*, to the holders of Class A Units, pro rata in accordance with amounts owed to them under this Section 3.1(c)(1), until each holder of Class A Units has received an amount that, together with all prior distributions made under this Article 3 to such holder on account of its Class A Units, equals the aggregate amount of its Capital Contributions, and

(2) *Second*, to all Members in accordance with their respective Ownership Percentage, provided, however, distributions with respect to Incentive Units shall be subject to such restrictions contained in the applicable Grant Agreement.

Section 3.2. Tax Distributions. The Company shall distribute to each Member, to the extent that distributions have not otherwise been made to such Member pursuant to Section 3.1(b), within thirty (30) days after the close of each fiscal quarter (or at such earlier times and in such amounts as determined by the Management Committee to be appropriate to enable the Members to pay their estimated income tax liabilities (or the Members' members, as applicable), an amount equal to fifty percent (50%) of the taxable income for the current fiscal year allocable to each Member pursuant to Exhibit C. Any amounts distributed under this Section 3.2 to a Member shall constitute an advance against future distributions from the Company to such Member and shall be taken into account in computing subsequent distributions under Section 3.1(b) so that the net amount of distributions to the Members under Sections 3.1(b) and 3.2 shall be equal to the net distributions that would have been made had there been no distributions pursuant to this Section 3.2. The Company shall not be required to borrow or raise capital to fund such distributions. In addition, the Company shall not be required to make any such distributions to the extent that the Company would in making such distributions breach any loan agreement that prohibits such distributions, and the Company shall use best efforts to ensure that any such loan agreement shall permit the Tax Distributions required by this Section 3.2.

Section 3.3. Withholding. Notwithstanding anything herein to the contrary, the Company shall, if required by law, withhold any federal, state, local or foreign tax with respect to any Member's allocable share of Company income or profits, or share of distributions or otherwise. Such withheld amounts shall be from cash otherwise distributable to such Member. The Company shall be authorized to take such other actions as shall be necessary or appropriate for the Company to comply with its obligations under federal, state, local and foreign tax laws.

ARTICLE 4

MANAGEMENT OF COMPANY

Section 4.1. Management and Authority.

(a) Authority of Management Committee. The operations and related contractual, financial and other affairs of the Company shall be managed and conducted under the direction of the Management Committee. The Management Committee shall generally have

all the rights, powers, duties and obligations of a manager under the New York Act and as provided by other applicable law, except as restricted by this Agreement.

(b) Appointment of Management Committee. The Management Committee shall be comprised of four individuals (each, a "**Manager**"), of which two shall be designated as "**Class A Managers**" and two of which shall be designated as "**Class B Managers.**" Frank Turano ("**Turano**") and David J. Palmieri ("**Palmieri**") shall have the right to designate and remove the Class A Managers; provided, however, that upon the death or disability or either Turano or Palmieri, then the other shall have the right to designate and remove both Class A Managers. In the event that both Class A Manager positions are vacant as a result of a death of both Turano and Palmieri, then the estates of Turano and Palmieri shall have the right to designate the Class A Managers. Michael Zumpano ("**Zumpano**") and Josh Stanley ("**Stanley**) shall have the right to designate or remove the Class B Managers; provided, however, that upon the death or disability or either Zumpano or Stanley, then the other shall have the right to designate or remove both Class B Managers. In the event that both Class B Manager positions are vacant as a result of a death of both Zumpano and Stanley, then the estates of Zumpano and Stanley shall have the right to designate the Class B Managers. Stanley, Turano, Palmieri and Zumpano are hereinafter referred to as the "**Founders.**" The initial Management Committee shall be comprised of the Founders.

(c) Authority of Managers. Each Manager shall be an agent of the Company for its business purposes and each Manager may bind the Company in the ordinary course of business, provided that, to the extent required under this Agreement, the Management Committee has approved such action in accordance with this Agreement. Unless otherwise expressly authorized by this Agreement or the Management Committee, the act of a sole Manager that is not apparently for carrying on the Company's ordinary course of business shall not bind the Company.

(d) Authorized Persons. The Managers may delegate functions relating to the day-to-day operations of the Company to such officers, agents, consultants or employees (each, an "**Authorized Person**"). An Authorized Person need not be a Members or Manager and shall have such duties, powers, responsibilities and authority as may from time to time be prescribed by the Managers, and may be removed at any time, with or without cause, by the Managers.

(e) Proof of Authority. In dealing with the Management Committee or Authorized Person acting on behalf of the Company, no Person shall be required to inquire into the authority of the Management Committee or Authorized Person to bind the Company. Persons dealing with the Company are entitled to rely conclusively on the power and authority of the Management Committee and each Authorized Person as set forth in this Agreement or in any power of attorney, resolution or other document delivered by a Management Committee or Authorized Person. This Section shall not, however, relieve any Authorized Person of any obligation to the Company or any Member resulting from or arising out of any action by the Authorized Person without any approval of the Management Committee required under this Agreement.

Section 4.2. Manager Voting Rights. Each Manager shall be entitled to cast one vote on all matters to be acted on by the Management Committee. Unless otherwise provided in this

Agreement, approval of a majority of the Managers shall constitute approval of the Management Committee. In the event of a deadlock among the Managers with respect to any matter put to a vote before the Management Committee, any Manager may elect to have the matter resolved by the vote of an individual unanimously approved by all of the Managers. The vote of such individual shall constitute an act of the Management Committee.

Section 4.3. Decisions Requiring Unanimous Approval of Managers. Certain acts or transactions under this Section 4.3 shall require the unanimous approval of Managers:

(a) The liquidation, dissolution or winding up of the Company;

(b) entry into any agreement or series of related agreements, including but not limited to any agreement to borrow money, that, either individually or collectively: (i) creates a commitment or monetary obligation greater than ten thousand dollars ($10,000); (ii) grants a mortgage on, a security interest in, a pledge or otherwise encumbers, any material asset of the Company; or (iii) has a term in excess of twelve months;

(c) purchase, construction or other acquisition of any capital asset or investment whereby the purchase price or value of which will exceed ten thousand dollars ($10,000);

(d) purchase or acquisition of any real or tangible property whereby the purchase price or value of which will exceed ten thousand dollars ($10,000);

(e) any expenses by a Manager or Managers that either individually or collectively exceed a total of ten thousand dollars ($10,000) incurred over a period of less than one (1) day.

Section 4.4. Action without Meeting. Any action permitted or required to be taken at any meeting of the Managers may be taken without a meeting, without prior notice or without a vote, if all Managers authorize such action at a meeting at which all Managers were present and voted consent thereto in writing. Subject to the requirements of the New York Act and this Agreement for notice of meetings, the Managers may participate in and hold a meeting of the Management Committee by means of a conference telephone or similar communications equipment by means of which all persons participating in the meeting can hear each other, and participation in such meeting shall constitute attendance and presence in person at such meeting, except where a person participates in the meeting for the express purpose of objecting to the transaction of any business on the ground that the meeting is not lawfully called or convened.

Section 4.5. Manager and Management Committee Liability. The Managers and Management Committee shall perform their duties in good faith and with that degree of care that an ordinarily prudent person in a like position would use under similar circumstances. Any Manager who so performs his or its duties shall not have any liability by reason of being or having been a Manager. Neither a Manager nor Management Committee shall be liable to the Company or to any Member for any loss or damage unless a judgment or other final adjudication adverse to the Manager establishes that such loss or damage was the result of fraud, willful misconduct, bad faith or a wrongful taking by the Manager or Management Committee.

Section 4.6. Duty of Loyalty. In addition to its duties under this Agreement and the New York Act, each Manager shall:

(a) account to the Company, and hold as its trustee, any property, profit or benefit derived in the conduct or winding up of the Company's business or from the use of Company property, including the appropriation of a Company opportunity;

(b) refrain from dealing with the Company in the conduct or winding up of the Company's business as or on behalf of a party having an interest adverse to the Company unless the Management Committee consents thereto; and

(c) refrain from competing with the Company as set forth in Section 4.8 in the conduct of the Company's business unless the Management Committee consents thereto.

Section 4.7. Standard of Conduct. Each Member acknowledges that the conduct of the Company's business may involve activities that are prohibited under federal, state or local laws or regulations governing controlled substances or that otherwise may result in negative consequences to the Company under federal, state or local laws or regulations relating to controlled substances. Each Member agrees that, notwithstanding anything contained herein to the contrary, the Company's engagement in such activities shall not constitute negligence or misconduct on that part of any Manager or preclude the Company from providing any Manager with indemnification, provided that such Manager acted in the good faith belief that such activities were within the Company's line of business and either (i) in material compliance with applicable state laws or (ii) effected for compelling humanitarian needs.

Section 4.8. No Exclusive Duty and Non-Competition.

(a) The Managers may have other business interests and may engage in other activities in addition to those relating to the Company. Neither the Company nor any Member shall have any right, by virtue of this Agreement, to share or participate in such other investments or activities of the Managers or in any income or revenues derived therefrom.

(b) Each Manager expressly acknowledges and agrees that while he or she or it is a Manager and for a period of one (1) year following such Manager's withdrawal as a Manager for any reason, (i) neither such Manager nor his or her or its Affiliates, will be permitted to have any investments or other business relationships with entities that compete with the Company in the State of New York (such competing business being a "**Competing Business**"), (ii) such Manager shall not render services or give advice to, or affiliate with (as employee, partner, consultant or otherwise) any Competing Business, (iii) such Manager or any of its Affiliates, shall not develop a strategic relationship with businesses that are and may be competitive with the Company, (iv) such Manager, or any of its Affiliates, will be obligated to immediately inform the Company or the Management Committee of any such opportunity, relationship or investment, and (vi) the involvement of such Manager, or any of its Affiliates (including its respective representatives serving on the Management Committee), in any Competing Business will constitute a conflict of interest by such Persons with respect to the Company or its Managers.

(c) Each Manager expressly acknowledges and agrees that while he or she or it is a Manager and for a period of one (1) year following such Manager's withdrawal as a Manager for any reason, no Manager or any of its Affiliates shall, directly or indirectly, (i) solicit or attempt to solicit business of any customers of the Company for products or services the same or similar to those offered, sold or produced at any time by the Company; (ii) otherwise divert or attempt to divert from the Company any business whatsoever; (iii) solicit or attempt to solicit for any business endeavor any employee or prior employee of the Company; or (iv) interfere with any business relationship between the Company and any other Person.

(d) At all times after the date hereof, no Manager or any of its Affiliate shall disclose or use any confidential information of or with respect to the Company or its business, provided, that such obligation shall not apply to any information (i) to the extent that it legally is or becomes part of public or industry knowledge from authorized sources other than a Manager or any of its Affiliates, or (ii) which the Manager or its Affiliate is required by law to disclose (but only to the extent required to be so disclosed).

(e) Because the Company and the Members do not have an adequate remedy at law to protect the Company's business from any breach of the obligations in this Section 4.8, each of them shall be entitled to injunctive relief, in addition to such other remedies and relief that would, in such event, be available to it or them.

ARTICLE 5

RIGHTS AND OBLIGATIONS OF MEMBERS

Section 5.1. Member Liability for Company Debt. No Member will be personally liable for any debts, losses or obligations of the Company by reason of its being a Member, except to the extent of its Capital Contribution and any obligation to make a Capital Contribution.

Section 5.2. No Partition. Each Member hereby irrevocably waives any and all right that it may have to maintain any action for partition of all or any portion of the Company, its assets or properties, or file a complaint or institute any proceeding at law or in equity to have the Company, its assets or properties partitioned, and each Member for itself, its successors, representatives, and assigns, hereby waives any right to proceed under any applicable law or otherwise to partition the Company, its assets or properties.

Section 5.3. No Right to Act. No Member, as such, has the authority or power to act for or on behalf of the Company, to do any act that would be binding on the Company, to manage any business or affairs of the Company, to direct that any action be taken by the Company or any of its Authorized Persons, officers, employees, or agents, or to make any expenditures on behalf of the Company, unless such specific authority has been expressly granted to and not revoked from such Person by the Management Committee or under this Agreement.

Section 5.4. Other Business Activity. It is agreed and understood that the Members, their respective principals and Affiliates may have interests, and may have fiduciary obligations

to persons that have interests, in actions taken or not taken by the Company, including interests that may potentially conflict with the interests of one or more Members. It is expressly agreed that Members and, subject to Section 417 of the New York Act, members of the Management Committee are permitted to consider and to pursue such interests when acting as Members and no Member or, subject to Section 417 of the New York Act, shall be liable to the Company or any Member for considering or pursuing such interests when proposing, voting or consenting to an action to be taken or not to be taken by the Company.

Section 5.5. Non-Competition. Each Member expressly acknowledges and agrees that while he or she or it is a Member and for a period of one (1) year following such Member's withdrawal as a Member for any reason, (i) neither such Member nor his or her or its Affiliates, will be permitted to have any investments or other business relationships with entities that are known by the Member to compete with the Company in the State of New York (such competing business being a "**Competing Business**"), (ii) such Member shall not render services or give advice to, or affiliate with (as employee, partner, consultant or otherwise) any Competing Business, (iii) such Member or any of its Affiliates, shall not develop a strategic relationship with businesses that are and may be competitive with the Company, (iv) such Member, or any of its Affiliates, will be obligated to immediately inform the Company or the Management Committee of any such opportunity, relationship or investment, and (vi) the involvement of such Member, or any of its Affiliates (including its respective representatives serving on the Management Committee), in any Competing Business will constitute a conflict of interest by such Persons with respect to the Company or its Managers.

Section 5.6. Confidential Information and Materials.

(a) For purposes of this Section 5.6, "**Confidential Information**" shall include, but is not limited to any information including plans, research, know-how, trade secrets, methodologies, techniques and strategies, product development, distribution plans, contractual arrangements, profits, sales, pricing policies, budget, forecasts, projections, operational methods, technical processes, other business affairs and methods, plans for future developments and other technical and business information, including all intellectual property rights therein, which is not publicly available and can be communicated by any means whatsoever, including, without limitation, oral, visual, written and electronic transmission, that relates to the Company's:

(i) business operations, products and services;

(ii) existing and potential partnerships, strategic alliances or joint ventures;

(iii) employment and compensation agreements and arrangements;

(iv) business policies, practices and contracts with others;

(v) information received from others that the Company is obligated to treat as confidential or proprietary; or

(vi) proprietary information of the Company, whether of a technical nature or otherwise.

Confidential Information shall not include that information defined as Confidential Information above that such Member can conclusively establish by documentary evidence: (x) entered the public domain without its breach of any obligation owed to the Company; or (y) was conclusively established to be independently developed by such Member or became known by or available to such Member from a source other than the Company subsequent to the Company's disclosure of such information to such Member, without any breach of any obligation of confidentiality owed to the Company.

(b) For purposes of this Section 5.6, "**Confidential Materials**" shall mean all tangible materials containing Confidential Information, including without limitation written or printed documents and computer disks or tapes whether machine or user readable.

(c) Each Member acknowledges that Confidential Information was developed and will continue to be developed, or acquired and will continue to be acquired, by the Company at great expense and constitutes trade secrets of the Company, and that irreparable injury will result to the Company from unauthorized disclosure of Confidential Information. Each Member also recognizes that the Company has received and in the future will receive confidential or proprietary information from third parties subject to a duty on the Company's part to maintain the confidentiality of such information and to use it only for certain limited purposes and this is also considered Confidential Information. Each Member agrees to hold all Confidential Information and Confidential Materials in strict confidence and not to disclose it to third parties (except its attorneys and other advisors who are obligated to treat the information as confidential). The obligation to keep Confidential Materials and Confidential Information confidential as provided in this Section 5.6 shall continue so long as Member is a Member of the Company and shall continue for a period of three years from the date such Member ceases to be a Member of the Company.

(d) The provisions of Section 5.6(c) shall not apply to the disclosure of Confidential Information or Confidential Materials approved for disclosure by written authorization of the Management Committee.

ARTICLE 6

REPRESENTATIONS OF MEMBERS

Section 6.1. Representations of each Member. Each Member hereby represents and warrants that:

(a) If such Member is a corporation, limited liability company, partnership or other entity, (i) such Member has been duly organized and is validly existing under the laws of the State of its formation with full power and authority and legal right to be a Member of the Company and to carry on its business in the manner and in the locations in which such business has been and is now being conducted by it, to execute and deliver this Agreement and to perform its obligations hereunder; and (ii) the execution and delivery of this Agreement has been duly authorized by such Member, this Agreement has been duly executed and delivered by such Member and this Agreement constitutes the valid and binding obligation of such Member, enforceable against it in accordance with its terms.

(b) If such Member is an individual, (i) such Member has all requisite right, power and authority and full legal capacity to execute and deliver this Agreement; (ii) this Agreement has been duly executed and delivered by such Member; and (iii) this Agreement constitutes the valid and binding obligation of such Member, enforceable against it in accordance with its terms.

(c) Such Member has all permits, licenses and approvals necessary for it to perform its obligations under this Agreement.

(d) No consent of or approval or permission by any Third Party is required as a condition to the entering into of this Agreement by such Member or any constituent Member, partner or shareholder of such Member.

(e) Neither the execution and delivery of this Agreement nor compliance with its terms will (whether before or after any applicable notice, cure or grace period) result in any breach or violation of the terms, conditions or provisions of, or conflict with or constitute a default under, or result in the creation of any Lien upon any property or assets of such Member pursuant to the terms of any indenture, mortgage, deed of trust, note, evidence of indebtedness, agreement or other instrument or contract to which such Member may be party or by which their or any of their properties or assets may be bound, or violate any provision of law or any applicable order, writ, injunction, judgment or decree of any court, or any order or other public regulation of any governmental commission, bureau or administrative agency.

(f) The Company has relied upon the fact that the Membership Interest is to be held by such Member for investment purposes only, and not with a view to any resale or distribution thereof.

Section 6.2. Securities Laws Representations. To the extent that the Membership Interest held by a Member is deemed to be a "security," such Member hereby represents and warrants that:

(a) Such Member is aware of the Company's business affairs and financial condition and has acquired sufficient information about the Company to reach an informed and knowledgeable decision to acquire a Membership Interest in the Company. Such Member is acquiring a Membership Interest for such Member's own investment purposes only and not with a view to any resale or "distribution" thereof within the meaning of the Securities Act of 1933, as amended (the "**Securities Act**").

(b) Such Member acknowledges and understands that Membership Interests have not been registered under the Securities Act, the New York State securities law or any other state securities law (collectively, the "Securities Acts") in reliance upon a specific exemption therefrom. Such Member further understands that Membership Interests must be held indefinitely unless they are subsequently registered under the Securities Act or an exemption from such registration is available. Such Member further acknowledges and understands that the Company is under no obligation to register to qualify Membership Interests or to assist any Member in complying with any exemption under the Securities Acts if such Member wishes to dispose of any Membership Interest.

(c) Such Member is able to bear the economic risk of loss of its entire investment and is either (i) an "accredited investor" as defined in Regulation D promulgated by the Securities and Exchange Commission under the Securities Act or (ii) has such knowledge and experience in business and financial matters that it is able to evaluate the merits and risks of investment in the Company.

ARTICLE 7

TRANSFERS OF MEMBERSHIP INTERESTS

Section 7.1. General Restrictions. No direct or indirect Transfer of all or part of a Membership Interest in the Company or of any direct or indirect ownership or other economic, profits, voting or other equity interest of any kind in a Member or any constituent shareholder, member or partner thereof shall be made or become effective unless the Transfer is permitted under this Article 7. Any Transfer in violation of this Article 7 shall be invalid, ineffective and not enforceable for any purpose.

Section 7.2. Transfer of Membership Interests; Permitted Transferees. Units held by any Member may only be Transferred upon the prior written consent of the Management Committee, which consent shall not be unreasonably withheld, and which consent shall be deemed to be given in connection with (a) a Compelled Sale or the Transfer of Units to the Company or to other Members pursuant to clause (iii) of the definition of "Permitted Transfer," (b) clause (iv) of the definition of "Permitted Transfer," (c) Section 7.3 Right of First Refusal, or (d) Section 6.7 Company's Right to Repurchase, and (d) in accordance with the requirements set forth in Section 7.6.

Section 7.3. Right of First Refusal in Sale of Member's Units.

(a) If at any time a Member proposes to Transfer all or any part of his, her or its Units (the "**Offered Securities**") for consideration to a third party (a "**Proposed Purchaser**"), the Member shall obtain from Proposed Purchaser a bona fide written offer (the "**Offer**") to purchase the Offered Securities, stating the Proposed Purchaser's name, the consideration, and the terms and conditions upon which the purchase is to be made. Such Member shall: (i) notify the Company in writing of the offer of such Offered Securities; and (ii) provide a copy of the Offer (collectively, the "**Member Sale Notice**"). The Member Sale Notice shall further state that the Company shall have the rights to acquire all or any of such Offered Securities in accordance with this Section.

(b) Upon delivery of the Member Sale Notice, the Company shall have the right of first refusal to purchase some or all of the Offered Securities, upon the same consideration and terms and conditions set forth in the Offer.

(c) If the Management Committee decides the Company shall desire to purchase all or any of the Offered Securities, the Company shall communicate in writing to such Member ("**Response Notice**") its election to purchase, which communication shall state the number of Offered Securities the Company desires to purchase and shall be delivered by the Company to such Member within 30 days following the delivery of the Member Sale Notice.

Such communication shall, when taken in conjunction with the Member Sale Notice, be deemed to constitute a valid, legally binding and enforceable agreement for the sale and purchase of such Offered Securities. The Company may assign its rights under this Section 7.3 with respect to all or any portion of the Offered Securities.

(d) If the Company does not elect to purchase all of the Offered Securities, then any Offered Securities that remain unsold (for purposes of this Section 7.3, "**Remaining Securities**") shall be offered by the Transferring Member to the other Members and the Transferring Member shall (i) notify in writing the other Members regarding the offer of such Offered Securities, the amount of Remaining Securities proposed to be Transferred to the Proposed Purchaser, and the proposed consideration, terms and conditions of the Transfer of the Remaining Securities, and (ii) provide a copy of the Offer (collectively, the "**Second Member Sale Notice**") within 5 days.

(e) Upon delivery of the Second Member Sale Notice, each Member who is not a Transferring Member shall thereupon have the right, on the terms and conditions set forth in the Offer, to purchase that portion of the Remaining Securities equal to the product of (i) the total number or amount of Remaining Securities and (ii) such Member's Ownership Percentage. Any Members who desire to purchase all or any of such Transferring Member's Remaining Securities shall communicate in writing its election to purchase to the Transferring Member, the Company and Management Committee. Such communication shall state the number of Remaining Securities the Member desires to purchase and shall be delivered by the Member to the Transferring Member, the Company and Management Committee within 15 days following the delivery of the Second Member Sale Notice (the "**Second Response Notice**"). Such communication shall, when taken in conjunction with the Second Member Sale Notice, be deemed to constitute a valid, legally binding and enforceable agreement for the sale and purchase of such Remaining Securities.

(f) If the Company and the Members (who are not Transferring Members) elect not to purchase all of the Offered Securities, then any Offered Securities that remain unsold may be sold by the Transferring Member at any time within 90 days after the date the Offer was made. Any such sale shall be at a price not less than the price, and upon other terms and conditions, if any, not more favorable to the Proposed Purchaser than those specified in the Offer. The balance of any Offered Securities not sold within such 90-day period shall continue to be subject to the requirements of a prior offer pursuant to this Section 7.3.

(g) Sales of Offered Securities to be sold to the Company or Members pursuant to this Section 7.3 shall be made, subject to regulatory approvals when necessary, within 45 days following delivery of the Response Notice or the Second Response Notice, as applicable (or if such 45th day shall not be a business day, then on the next succeeding business day).

(h) Notwithstanding anything to the contrary contained herein, terms and conditions in this Section 7.3 and the rights of first refusal conferred hereunder shall not apply to Transfers made to Permitted Transferees that have been approved by the Management Committee.

Section 7.4. Company's Right to Purchase upon the Occurrence of a Triggering Event.

(a) The Company shall have the right, but not the obligation, to purchase from the applicable Member (the "**Selling Member**"), the Units of the Selling Member upon the occurrence of a Triggering Event.

(b) Upon the occurrence of a Triggering Event, the Selling Member shall immediately disclose to the Company the fact that the Triggering Event has occurred and all pertinent information in his possession relating to the Triggering Event. In the case of a Triggering Event, the Selling Member (or the spouse or a legal representative, as the case may be) shall be deemed to have offered to sell all Units held by the Selling Member immediately prior to the occurrence of the Triggering Event.

(c) For a period of sixty (60) days following either: (a) receipt by the Company of notice from the Selling Member (or the spouse or a legal representative of the Selling Member, as the case may be) of the occurrence of a Triggering Event; or (b) the Company otherwise becoming aware of the occurrence of a Triggering Event, the Company shall have the right to purchase, in accordance with the terms and conditions of this Section 7.4, the Units of the Selling Member by delivering written notice of its election to do so to the Selling Member (or the spouse or a legal representative of the Selling Member, as the case may be) during such sixty (60) day period. The closing of such purchase and sale shall occur within no more than thirty (30) days following the receipt of such notice.

(d) In the event the Company elects to purchase the Units of the Selling Member upon the occurrence of a Triggering Event, then the Selling Member (or the spouse of the Selling Member, as the case may be) shall be entitled to receive, an amount equal to fair market value of such Units as of the date of the occurrence of the Triggering Event. Fair market value shall be determined in good faith in writing by the Management Committee based on the value of the Company times the Ownership Percentage held by the Selling Member and delivered by the Management Committee to the Selling Member within fifteen (15) days after a Triggering Event. If the Selling Member disagrees with such determination, then the Selling Member may within fifteen (15) days deliver a written notice to the Management Committee disagreeing with such determination and requesting that a third party valuation be done (a "**Valuation Request**"). Within fifteen (15) days after a Valuation Request, each of the Company and the Selling Member shall each designate one independent third party professional appraiser with at least fifteen (15) years' experience valuing privately held entities who has not previously performed any services for the Selling Member or the Company (each an "**Appraiser**"). Within thirty (30) days of their appointment, each Appraiser shall deliver a written valuation of the Units held by the Selling Member based on the value of the Company times the Ownership Percentage held by the Selling Member (which shall not in any event be less than the valuation proposed by the Management Committee). If the values as so delivered by the Appraisers are within 10% of the lower value, then the average between the Appraisers' valuations shall be the value of the Selling Member Units. If the values are more than 10% apart based on the lower Appraiser's value, then within ten (10) days of the delivery of the Appraisers' valuation, the Appraisers shall designate an independent third appraiser (with the same qualifications required of the Appraisers hereunder) to value the Selling Member Units, which third appraiser shall within an additional thirty (30) days select either value of the Appraisers.

The Company and the Selling Member shall each pay the costs for the Appraiser it has appointed, and shall share equally the costs of any third appraiser.

(e) In the event the Company elects to purchase the Units of the Selling Member upon the occurrence of a Triggering Event, the Company may, in its sole discretion, pay the purchase price in lump sum within thirty (30) days of closing of such purchase of the Units of the Selling Member or by payment of at least 20% of the purchase price and delivery of a promissory note in an initial principal amount equal to the remaining portion of purchase price. The principal due under such promissory note, together with interest at a rate equal to the prime rate of interest as of the date of such Triggering Event at the principal commercial bank of the Company, in five equal annual installments of principal and interest beginning on the first anniversary of such Triggering Event and continuing thereafter from year-to-year until paid in full. Any such note shall be secured by the Units purchased and shall contain customary terms for such promissory notes.

Section 7.5. Transfer Requirements Regarding Membership Interest. If a Member proposes to Transfer its Membership Interest to another Person as permitted by this Article 7, the Transfer shall not be completed or effective until all of the requirements stated below have been satisfied:

(a) Transferee has prepared, signed and delivered to the Company and each other remaining Members an agreement (subject to such reasonable modification as requested by the Transferee) in which (i) the Transferring Member assigns its entire or a partial Membership Interest in the Company to the Transferee, (ii) the Transferee assumes all, or, in the case of a Transfer of less than all of a Member's Units, the applicable portion of the, obligations of the Transferring Member under the Agreement from and after the effective date of the Transfer, and (iii) the Transferring Member and the Transferee agree to pay all costs and expenses (including reasonable attorney's fees) incidental to the Transfer, which were incurred by the Company and/or any non-Transferring Member

(b) in the event that the Transferee is not a Member, the Transferee shall have executed and delivered a Joinder Agreement in the form attached hereto as Exhibit B;

(c) Transferring Member and/or the Transferee shall be deemed to have represented to the Company and the remaining Members that (i) the Transfer will not cause the Company to be treated as an association taxable as a corporation for Federal income tax purposes, (ii) the Transfer will not cause the Company to be treated as a "publicly traded partnership" within the meaning of Section 7704 of the Code, and (iii) the Transfer will not terminate the Company for Federal income tax purposes and that the Transfer does not require registration under applicable securities laws;

(d) upon the Transfer of its entire Membership Interest in the Company and the admission of such Member's Transferee as a substitute Member pursuant to this Article 7, a Member shall be deemed to have withdrawn from the Company;

(e) distributions payable on and after the date of the Transfer shall be payable solely to the Transferee and the Transferring Member shall have no claim to such distributions

(unless (i) otherwise provided in any contract or agreement between the Transferor and Transferee or (ii) in the event of the Transfer of less than all of such Transferring Member's Units) even if all or a portion of such amount relates to a period prior to the Transfer; *provided, however*, that until notice from the Transferor and the Transferee to the Company and each non-Transferring Member that all distributions and other amounts payable under the Agreement should be paid to the Transferee and until the Transferor has satisfied all of the requirements set forth in this Section 7.5, the Company and each non-Transferring Member shall be entitled to (i) pay all distributions or other amounts payable under this Agreement to the Transferor and any such payment shall fully discharge any obligation owed to the Transferee with respect thereto, and (ii) deal solely with the Transferor with respect to all actions required to be taken pursuant to this Agreement, and any and all decisions, actions or inactions made or taken by the non-Transferring Member and the Transferor shall be binding on the Company and the Transferee; and

(f) Transferee shall deliver to the Transferor an opinion of counsel in form and substance reasonably satisfactory to the Transferor and its counsel and covering the due authorization, execution and delivery by the Transferee of the documents and consents evidencing and authorizing the Transfer of the Membership Interest in the Company.

Section 7.6. Compelled Sale Right.

(a) If a proposal for a sale of all or substantially all of the Company's securities to, or a merger with or into another person for a specified price payable in cash, securities or any other consideration and on specified terms and conditions (a "**Sale Proposal**"), shall have been approved by the Members then the Management Committee may require all of the Members to sell all of the Units held by them to the party or parties whose Sale Proposal was accepted as hereinabove provided on the terms and conditions provided in this Section 7.6.

(b) The Company, under the direction of the Management Committee, shall send a written notice (the "**Compelled Sale Notice**") of the exercise of the rights of the Management Committee pursuant to this Section 7.6 to each of the Members setting forth the consideration to be paid pursuant to the Sale Proposal and the other terms and conditions of the transaction.

(c) Each Member, upon receipt of the Compelled Sale Notice, shall be obligated to (i) if applicable, vote in favor of such Sale Proposal at any meeting of Members of the Company called to vote on or approve such Sale Proposal, (ii) sell all of its Units and participate in the transaction (the "**Compelled Sale**") contemplated by the Sale Proposal and (iii) otherwise take all necessary action, including, without limitation, expressly waiving any dissenter's rights or rights of appraisal or similar rights, providing access to documents and records of the Company, entering into an agreement reflecting the terms of the Sale Proposal, surrendering stock certificates, giving any customary and reasonable representations and warranties given by the other Members and executing and delivering any certificates or other documents, reasonably requested by the Management Committee and their counsel, to cause the Company and the Management Committee to consummate such Compelled Sale. Any such Compelled Sale Notice may be rescinded by the Management Committee by delivering written notice thereof to all of the Members. If any Member fails to comply in the time prescribed in the

Compelled Sale Notice, the Management Committee may take such actions necessary to consummate the sale.

(d) Upon the consummation of the Compelled Sale, all of the Members shall receive the same proportion of the aggregate consideration from such Compelled Sale as such Member would have received if the net proceeds from such Compelled Sale had been distributed by the Company pursuant to Section 3.1(c).

Section 7.7. General Rules.

(a) Any purported Transfer of a Membership Interest (or ownership or beneficial interest in a Member, whether direct or indirect) that is not permitted or authorized pursuant to this Agreement or otherwise consented to in writing by the Managers shall be null and void *ab initio* and of no effect whatsoever.

(b) Any Person which is an assignee of all or any portion of the Membership Interest of a Member but which is not admitted as a substitute member in accordance with this Agreement (i) shall have only those rights specifically provided for such an assignee in the New York Act, and (ii) shall be subject to all the provisions of this Agreement to the same extent and in the same manner as any Member desiring to make a Transfer of a Membership Interest, if such Person desires to make a further Transfer of such Membership Interest.

ARTICLE 8

INDEMNIFICATION

Section 8.1. Indemnification. To the fullest extent permitted by applicable law from time to time in effect:

(a) Indemnification by Company. The Company shall indemnify, hold harmless and defend the Members, Managers, and Authorized Persons, in their capacity as such for the Company, from and against any loss, expense, damage or injury suffered or sustained by them by reason of any acts or omissions arising out of their activities on behalf of the Company or in furtherance of the interests of the Company, including but not limited to any judgment, award, settlement, reasonable attorneys' fees and other costs or expenses incurred in connection with the defense of any actual or threatened action, proceeding or claim, if the acts or omissions were not performed or omitted fraudulently or as a result of gross negligence or willful misconduct by the indemnified party. Reasonable expenses incurred by the indemnified party in connection with any such proceeding relating to the foregoing matters may be paid or reimbursed by the Company in advance of the final disposition of such proceeding upon receipt by the Company of (i) written affirmation by the Member, Manager or Authorized Person requesting indemnification of its good-faith belief that it has met the standard of conduct necessary for indemnification by the Company and (ii) a written undertaking by or on behalf of such Member, Manager or Authorized Person to repay such amount if it shall ultimately be determined by a court of competent jurisdiction that such Member, Manager or Authorized Person has not met such standard of conduct, which undertaking shall be an unlimited general obligation of the indemnified party but need not be secured.

(b) Indemnification by the Members. Each Member hereby agrees to indemnify and defend the Company, the other Members and each of their respective employees, agents, partners, members, shareholders, officers and directors and hold them harmless from and against any and all claims, liabilities, damages, costs and expenses (including, without limitation, court costs and attorneys' fees and expenses) suffered or incurred on account of or arising out of any breach of this Agreement by that Member.

(c) Indemnification of Employees and Agents. The Company, upon the written approval of the Management Committee, may indemnify and advance expenses to any employees or agents of the Company who are not or were not Members of the Company but who are or were serving at the request of the Company as a manager, director, officer, partner, venturer, proprietor, trustee, employee, agent, Authorized Person or similar functionary of another foreign or domestic limited liability company, corporation, partnership, joint venture, sole proprietorship, trust, employee benefit plan or other enterprise against liabilities and expenses asserted against such Person and incurred by such Person in such a capacity or arising out of their status as such a Person, to the same extent that it may indemnify and advance expenses to Members under this Article 8.

Section 8.2. Advancement of Expenses. The right to indemnification conferred in this Article 8 pursuant to Section 8.1 shall, with respect to the Management Committee, include the right to be paid or reimbursed by the Company the reasonable expenses incurred by the Management Committee in the event the Management Committee was or is threatened to be made a named defendant or respondent in a Proceeding; provided, that the payment of such expenses incurred by the Management Committee in advance of the final disposition of a Proceeding shall be made only upon delivery to the Company of a written affirmation by the Management Committee of its good faith belief that it has met the standard of conduct necessary for indemnification under Article 8 and a written undertaking, by or on behalf of the Management Committee, to repay all amounts so advanced if it shall ultimately be determined that the Management Committee is not entitled to be indemnified under this Article 8 or otherwise.

Section 8.3. Contract with the Company. The rights granted pursuant to this Article 8 may, at the discretion of the applicable Person claiming indemnification, be deemed to be contract rights.

Section 8.4. Non-exclusivity of Rights. The right to indemnification and the advancement and payment of expenses conferred in this Article 8 shall not be exclusive of any other right that a Member or other Person indemnified pursuant to Section 8.1 may have or hereafter acquire under any law (common or statutory), provision of the Certificate or this Agreement, other agreement, vote of Members or otherwise.

Section 8.5 Source of Payment. Notwithstanding anything contained herein to the contrary, any amount to which an Indemnitee may be entitled under this Article 8 shall be paid only out of the assets of the Company and any insurance proceeds available to the Company for such purposes. No Member shall be personally liable for any amount payable pursuant to this Article 8, or to make any Capital Contribution, return any distribution made to it by the Company, or restore any Negative Capital Account balance to enable the Company to make any

such payment. The Company shall, if commercially practicable, obtain insurance with per-claim and aggregate limits reasonably expected to cover its anticipated obligations hereunder.

Section 8.5. Insurance. The Company may purchase and maintain insurance, at its expense, to protect itself and any Person who is or was serving as a manager (including as the Management Committee), officer, Authorized Person or agent of the Company or who is or was serving at the request of the Company as a manager, director, officer, partner, venturer, proprietor, trustee, employee, agent, Authorized Person or similar functionary of another foreign or domestic limited liability company, corporation, partnership, joint venture, sole proprietorship, trust, employee benefit plan or other enterprise against any expense, liability or loss, whether or not the Company would have the power to indemnify such Person against such expense, liability or loss under this Article 8.

Section 8.6. Savings Clause. If this Article 8 or any portion hereof shall be invalidated on any ground by any court of competent jurisdiction, then the Company shall nevertheless indemnify and hold harmless each Member or any other Person indemnified pursuant to this Article 8 as to costs, charges and expenses (including attorneys' fees), judgments, fines and amounts paid in settlement with respect to any action, suit or proceeding, whether civil, criminal, administrative or investigative to the full extent permitted by any applicable portion of this Article 8 that shall not have been invalidated and to the fullest extent permitted by applicable law.

ARTICLE 9

FINANCIAL AND ACCOUNTING MATTERS

Section 9.1. Books and Records. At the expense of the Company, a Manager or an Authorized Person shall maintain at the Company's principal place of business, records and accounts of all operations and expenditures of the Company, including, without limitation, the following records:

(a) current list in alphabetical order of the name and mailing address of each Member and Manager, their facsimile numbers, email addresses, and, with respect to the Members, their respective shares of Net Profits and Net Losses, or information from which such shares can be derived;

(b) copy of the Articles of Organization and all amendments thereto, together with executed copies of any powers of attorney pursuant to which any such amendment was executed;

(c) copies of the Company's federal, state and local income tax returns and reports, if any, for the three most recent Fiscal Years;

(d) copies of this Agreement, as in effect from time to time;

(e) any writings or other information with respect to each Member's obligation to contribute cash, property or services to the Company, including, without limitation,

the amount of cash so contributed and a description and statement of the agreed-upon fair market value of property or services so contributed or to be contributed;

(f) any financial statements of the Company for the three most recent Fiscal Years;

(g) minutes of every annual, regular, special and court-ordered meeting of the Members or Managers; and

(h) any written consents obtained from the Members or Managers for actions taken by Members or Managers without a meeting.

Section 9.2. Inspection of Books and Records. Any Member may inspect and review the books and records of the Company. Any Member may, at its expense, have the Company make copies of all or any portion of the books and records of the Company at no more than the true and auditable cost. Unless the Company agrees otherwise, access to the books and records of the Company must take place during the Company's regular business hours. The Company may impose additional reasonable conditions and restrictions on Members' access to the books and records of the Company, including specifying the amount of advance notice a Member must give and the reasonable charges imposed for copying.

Section 9.3. Bank Accounts. The Company shall employ reasonable efforts to maintain its funds in one or more depositary accounts established in the name of the Company (each, an "**Account**"). Each Account shall be solely in the name of the Company. In no event shall any Account be co-mingled with any funds or accounts of any Manager, Member, Authorized Person or any other Person, and shall be used strictly for Company purposes, while taking into account the difficulty of maintaining accounts in this industry described in Section 1.5.

Section 9.4. Annual and Quarterly Financial Statements.

(a) As soon as practicable (but in no event later than one hundred twenty days (120) after the end of the Fiscal Year during the term of this Agreement), the Management Committee shall arrange for and furnish to the Members annual financial statements consisting of an income statement and balance sheet (each, an "**Annual Financial Statements**") for such Fiscal Year accurately reflecting the financial condition and the results of operation of the Company; provided that such Annual Financial Statements need not be audited.

(b) As soon as practicable (but in no event later than one hundred twenty days (60) after the end of the first three quarters of the Fiscal Year (March 30, June 30, September 30) during the term of this Agreement), the Management Committee shall arrange for and furnish to the Members quarterly financial statements consisting of an income statement and balance sheet (each, a "**Quarterly Financial Statements**") for such quarter accurately reflecting the financial condition and the results of operation of the Company; provided that such Quarterly Financial Statements need not be audited.

ARTICLE 10

TAX MATTERS

Section 10.1. Taxation as Partnership. The Members intend that the Company shall be treated as a partnership and that the Members shall be taxed as partners for federal, state and local income tax purposes. No Party shall take any action that would result in the Company being taxed as a corporation. Unless otherwise determined by the unanimous approval of the Management Committee, the Company shall not file any election pursuant to Treasury Regulation Section 301.7701-3(c) to be treated as an association taxable as a corporation for Federal income tax purposes. The Company shall not elect, pursuant to Code Section 761(a) to be excluded from the provisions of Subchapter K of the Code. The Company shall prepare and file with the IRS and other necessary taxing authorities all documents, if any, necessary to elect, confirm and maintain its status as a partnership. This characterization is intended solely for income tax purposes and the Company, its Members and their Affiliates shall not be treated or deemed to be partners or a partnership for any other purpose.

Section 10.2. Capital Accounts; Tax Allocations. Exhibit C attached to this Agreement provides for the maintenance of Capital Accounts for each Member and allocation of profits, losses and other tax items to the Members, and is incorporated into this Agreement by this reference.

Section 10.3. Tax Matters Partner.

(a) Tax Matters Partner. Frank Turano is hereby designated as the tax matters partner within the meaning of Section 6231(a)(7) of the Code ("**Tax Matters Partner**"). In such capacity, the Tax Matters Partner shall have all of the rights, authority and power, and shall be subject to all of the obligations, of a tax matters partner to the extent provided in the Code and the Treasury Regulations. Consistent with the requirements of the Code and the Treasury Regulations, the Tax Matters Partner shall inform the other Members of any decision or actions taken as the Tax Matters Partner.

(b) State and Local Tax Law. If any state or local tax law provides for a tax matters partner or Person having similar rights, powers, authority or obligations, the Tax Matters Partner shall also serve in such capacity. In all other cases, the Tax Matters Partner shall represent the Company in all tax matters to the extent allowed by law and to the maximum extent not prohibited by law.

(c) Expenses of the Tax Matters Partner. Expenses reasonably incurred by the Tax Matters Partner shall be borne by the Company as Company Costs. Such expenses shall include, without limitation, reasonable fees of attorneys and other tax professionals, accountants, appraisers and experts, filing fees and reasonable out of pocket costs.

(d) Effect of Certain Decisions by Tax Matters Partner. Any decisions made by the Tax Matters Partner, including, without limitation, whether or not to settle or contest any tax matter, whether or not to extend the period of limitations for the assessment or collection of

any tax and the choice of forum for such contest shall be made in the Tax Matters Partner's reasonable discretion.

Section 10.4. Tax Returns; Tax Elections.

(a) Tax Returns. The Management Committee shall cause to be prepared and filed all applicable income, franchise, gross receipts, payroll and other tax returns that the Company is obligated to file. Copies of Schedule K of the Company's tax return (Form 1065) shall be distributed to all Members as soon as practicable after the Partnership's Fiscal Year.

(b) Elections by Company. Except as provided in Section 10.1 hereof, relating to the tax classification of the Company, the Tax Matters Partner shall have the exclusive right to make any determination whether the Company shall make available elections (including any election pursuant to Section 754 of the Code relating to certain adjustments to the basis of the Company's assets or properties) for federal, state or local income tax purposes. All decisions and other matters concerning the computation and allocation of items of income, gain, loss, deduction and credits among the Members, and accounting procedures not specifically and expressly provided for by the terms of this Agreement shall be determined by the Tax Matters Partner. Any determination made pursuant to this Section 10.4(b) by the Tax Matters Partner shall be conclusive and binding on all Members. The Tax Matters Partner shall be absolved from all liability for any and all consequences to any previously admitted or subsequently admitted Members resulting from its making or failing to make any such election.

(c) Elections by Members. The Tax Matters Partner shall have the sole discretion to consent to any tax election that a Member may request. In the event any Member makes any tax election that requires the Company to furnish information to such Member to enable such Member to compute its own tax liability, or requires the Company to file any tax return or report with any tax authority, in either case that would not be required in the absence of such election made by such Member, the Company, acting through the Tax Matters Partner, may, as a condition to furnishing such information or filing such return or report, require such Member to pay to the Company any incremental expenses incurred in connection therewith.

ARTICLE 11

DISSOLUTION AND WINDING UP

Section 11.1. Events Resulting in Dissolution. The Company shall not be dissolved or terminated by reason of the bankruptcy, removal, withdrawal, dissolution or admission of any Member. The Company shall dissolve pursuant to the New York Act only if one or more of the following events occurs:

(a) The sale of all or more than 90% of the Company's assets or properties, *provided, however*, that if such sale is made on the terms that the Company takes a note or other indebtedness or securities of the purchaser for part of the purchase price, no dissolution shall occur until such time as the Company ceases to be the holder of such securities, such note or indebtedness or such note or the indebtedness evidenced by such note has been paid in full;

(b) The agreement in writing by the Management Committee; or

(c) Any judicial entry of an order of dissolution of the Company under the New York Act.

Section 11.2. Procedure.

(a) Upon the dissolution of the Company, the Management Committee shall wind up the affairs of the Company. The Members shall continue to receive allocations of Net Income and Net Losses and distributions of Available Cash from Operations during the period of liquidation of the Company in the same manner and proportion as though the Company had not dissolved.

(b) Following the payment of all debts and liabilities of the Company and all expenses of liquidation, and subject to any reserves which may be approved by Management Committee for the payment of contingent or unforeseen obligations of the Company (including indemnification obligations), which will continue after the sale of the Company, its assets or properties, the proceeds of the liquidation and any other funds of the Company shall be distributed in accordance with Section 3.1(c).

(c) Except as approved by the Management Committee, no Member shall have the right to demand or receive property other than cash upon liquidation.

(d) Upon the completion of the liquidation of the Company and the distribution of all Company funds, the Company shall terminate.

(e) Within ninety (90) days following the dissolution and the commencement of winding up of the Company, Articles of Dissolution shall be prepared, executed and filed in accordance with the Act.

ARTICLE 12

NOTICES

Section 12.1. Notices. All notices, consents, requests for approval, approvals, demands, waivers or other communications required to be sent or otherwise applicable under this Agreement (each, a "**Notice**") shall be in writing and shall be sent to each applicable party, its or their legal counsel at the addresses set forth below. A Notice that complies with the requirements of this Section 12.1 shall be deemed to have been duly given and received: (a) when delivered personally; (b) one (1) Business Day after being delivered to a reputable overnight courier service, marked for next day delivery and with delivery charges prepaid by the sender; or (c) on the first Business Day after receipt, if delivered by facsimile transmission to the facsimile number of the addressee shown below, if (1) receipt is confirmed in writing by the sending facsimile machine and (2) the Notice is also sent by any means described in clause (a) or (b) above.

Section 12.2. Addresses for Notices. All notices must be addressed to the Member at the Member's last known street address on the records of the Company. A notice to the Company must be addressed to the Company's principal office. Any party may designate, by notice to all of the others, substitute addresses or addressees for notices.

ARTICLE 13

MISCELLANEOUS

Section 13.1. Entire Agreement. This Agreement, together with the Articles of Organization, all Exhibits and Schedules, constitutes the entire understanding and agreement among the Parties pertaining to its subject matter. This Agreement supersedes any and all prior negotiations, understandings or agreements among the Parties with respect to its subject matter, but shall not amend, modify, supersede or in any way affect any other agreement or understanding among the Members or their respective Affiliates that do not relate to the subject matter of this Agreement.

Section 13.2. Amendments. No provision of this Agreement may be amended, supplemented or waived except in a written instrument approved by the Management Committee; provided that a Manager or an Authorized Person may amend Schedule A attached hereto to reflect the addition or removal of Members, the issuance of Units or changes to Ownership Percentages effected in accordance with the terms of this Agreement. In the event that any amendment, supplement or waiver to this Agreement (a) modifies the rights of a Member without subjecting all of the other Members to such modification, and (b) such modification is materially adverse to the interests of such Member, then such amendment, supplement or waiver will require the written consent of such Member.

Section 13.3. Amendment by Agreement of Merger. Notwithstanding anything to the contrary contained in this Agreement, in accordance with Section 1004(e) of the Act, an agreement of merger or consolidation approved by the Members as required by this Agreement may effect (a) amendments to this Agreement contained in the agreement of merger or consolidation or necessitated thereby or (b) the adoption of a new operating agreement for the Company if it is the surviving or resulting entity, in each case without further action by the Members.

Section 13.4. Successors and Assigns. This Agreement shall be binding upon and inure to the benefit of the Members and their permitted successors and assigns.

Section 13.5. No Third Party Beneficiaries. The terms and provisions of this Agreement are for the sole and exclusive benefit of the Parties and their permitted successors and assigns and shall not be deemed to create any rights for the benefit of any other Person.

Section 13.6. Governing Law. This Agreement and the rights of the Parties shall be governed by, interpreted and enforced in accordance with the internal laws of the State of New York, including the New York Act as amended from time to time, without regard to New York's conflicts of laws principles. The rights and liabilities of the Members shall be determined pursuant to the Act and this Agreement. To the extent that any provision of this Agreement is inconsistent with any provision of the New York Act, this Agreement shall govern to the extent permitted by the New York Act.

Section 13.7. Jurisdiction; Choice of Forum. Each Party hereby irrevocably (a) submits to the exclusive jurisdiction of any New York state or federal court sitting in the County of New

York (New York), in any action or proceeding arising out of or relating to this Agreement, the relations between the Parties and any matter, action or transaction described in this Agreement, whether in contract, tort or otherwise, (b) agrees that such courts shall have exclusive jurisdiction over such actions or proceedings, (c) waives the defense that New York is an inconvenient forum to the maintenance and continuation of such action or proceeding, (d) consents to the service of any and all process in any such action or proceeding by the mailing of copies (certified mail, return receipt requested and postage prepaid) of such process to them at their addresses specified in Schedule A and (e) agrees that a final and non-appealable judgment rendered by a court of competent jurisdiction in any such action or proceeding shall be conclusive and may be enforced in other jurisdictions by suit on the judgment or in any other manner provided by law. In the event that an action or proceeding is initiated in one of the courts referenced above and is pending, the Parties agree, for the convenience of the parties and subject to any limitations on subject matter jurisdiction of the court, to initiate any counterclaims or related actions in the same proceeding (as opposed to a separate proceeding in any of the other courts specified above).

Section 13.8. Waiver of Jury Trial. EACH MEMBER, FOR ITSELF AND ON BEHALF OF ITS AFFILIATES, HEREBY WAIVES ITS RIGHT TO TRIAL BY JURY IN ANY ACTION, LAWSUIT OR PROCEEDING RELATING TO ANY DISPUTE ARISING UNDER OR IN CONNECTION WITH THIS AGREEMENT OR ANY TRANSACTION DESCRIBED IN THIS AGREEMENT OR DISPUTE BETWEEN THE PARTIES (INCLUDING DISPUTES WHICH ALSO INVOLVE OTHER PERSONS).

Section 13.9. Severability. If any provision of this Agreement or the application of such provision to any Party, Person or circumstance shall be held invalid, illegal or unenforceable to any extent, the remainder of this Agreement, such provision or the application of that provision to another Party or circumstance shall otherwise be enforceable to the fullest extent permitted by the law.

Section 13.10. Captions and Construction. The captions and headings used in this Agreement are for convenience only and do not in any way affect, limit, amplify or modify the terms and provisions hereof. Whenever the singular number is used in this Agreement and when required by the context, the same shall include the plural and vice versa, and the neuter gender shall include the feminine and masculine genders and vice versa. This Agreement amends and restates in full that certain Operating Agreement dated as of February 8, 2015.

Section 13.11. Further Assurances and Execution of Additional Documents. Each member agrees to perform any additional acts that may be reasonably necessary or appropriate to effectuate and perform the provisions of this Agreement and the transactions contemplated herein. Furthermore, each Member hereby agrees to execute such other and further documents and instruments, including, without limitation, statements of their Membership Interests and powers of attorney, as necessary to comply with applicable law or otherwise as reasonably requested by the Management Committee.

Section 13.12. Counterparts. This Agreement may be executed in several counterparts. If so executed, each of such counterparts shall be deemed an original for all purposes and all counterparts shall, collectively, constitute one and the same agreement.

[Remainder of Page Intentionally Left Blank; Signature Pages Follows]

SIGNATURE PAGE TO THE
AMENDED AND RESTATED LIMITED LIABILITY COMPANY OPERATING AGREEMENT
OF
CITIVA MEDICAL LLC

IN WITNESS WHEREOF, the Parties hereto have entered into this Agreement on the day first above written.

Frank Turano

David J. Palmieri

Michael David Zumpano

Josh Stanley

Jack D'Angelo

Christopher Perez

Alicia Durante

Thomas Mazza

Michael Mazza

Kathleen Caridi

Geraldine Greene

Paul Russo

Erica Fraga

George Lewis

VG – Citiva Medical Holdings LLC

By: [redacted]
Name:
Title: Manager

SIGNATURE PAGE TO THE
AMENDED AND RESTATED LIMITED LIABILITY COMPANY OPERATING AGREEMENT
OF
CITIVA MEDICAL LLC

IN WITNESS WHEREOF, the Parties hereto have entered into this Agreement on the day first above written.

Frank Turano

Michael David Zumpano

Jack D'Angelo

Alicia Durante

Michael Mazza

Paul Russo

George Lewis

David J. Palmieri

Josh Stanley

Christopher Perez

Thomas Mazza

Kathleen Caridi

Geraldine Greene

Erica Fraga

VG – Citiva Medical Holdings LLC

By: _____
Name [redacted]
Title: Manager

SIGNATURE PAGE TO THE
AMENDED AND RESTATED LIMITED LIABILITY COMPANY OPERATING AGREEMENT
OF
CITIVA MEDICAL LLC

IN WITNESS WHEREOF, the Parties hereto have entered into this Agreement on the day first above written.

Frank Turano

David J. Palmieri

Michael David Zumpano

Josh Stanley

Jack D'Angelo

Christopher Perez

Alicia Durante

Thomas Mazza

Michael Mazza

Kathleen Caridi

Geraldine Greene

Paul Russo

Erica Fraga

George Lewis

VG – Citiva Medical Holdings LLC

By: _____
Name: [redacted]
Title: Manager

SIGNATURE PAGE TO THE
AMENDED AND RESTATED LIMITED LIABILITY COMPANY OPERATING AGREEMENT
OF
CITIVA MEDICAL LLC

IN WITNESS WHEREOF, the Parties hereto have entered into this Agreement on the day first above written.

Frank Turano

David J. Palmieri

Michael David Zumpano

Josh Stanley

Jack D'Angelo

Christopher Perez

Alicia Durante

Thomas Mazza

Michael Mazza

Kathleen Caridi

Paul Russo

Geraldine Greene

Erica Fraga

George Lewis

VG – Citiva Medical Holdings LLC

By: _____
Name: [redacted]
Title: Manager

SIGNATURE PAGE TO THE
AMENDED AND RESTATED LIMITED LIABILITY COMPANY OPERATING AGREEMENT
OF
CITIVA MEDICAL LLC

IN WITNESS WHEREOF, the Parties hereto have entered into this Agreement on the day first above written.

Frank Turano

David J. Palmieri

Michael David Zumpano

Josh Stanley

Jack D'Angelo

Christopher Perez

Alicia Durante

Thomas Mazza

Michael Mazza

Kathleen Caridi

Geraldine Greene

Paul Russo

Erica Fraga

George Lewis

VG – Citiva Medical Holdings LLC

By: _____
Name: [redacted]
Title: Manager

SIGNATURE PAGE TO THE
AMENDED AND RESTATED LIMITED LIABILITY COMPANY OPERATING AGREEMENT
OF
CITIVA MEDICAL LLC

IN WITNESS WHEREOF, the Parties hereto have entered into this Agreement on the day first above written.

Frank Turano

David J. Palmieri

Michael David Zumpano

Josh Stanley

Jack D'Angelo

Christopher Perez

Alicia Durante

Thomas Mazza

Michael Mazza

Kathleen Caridi

Geraldine Greene

Paul Russo

Erica Fraga

George Lewis

VG - Citiva Medical Holdings LLC

By _____
Name: [redacted]
Title: Manager

SIGNATURE PAGE TO THE
AMENDED AND RESTATED LIMITED LIABILITY COMPANY OPERATING AGREEMENT
OF
CITIVA MEDICAL LLC

IN WITNESS WHEREOF, the Parties hereto have entered into this Agreement on the day first above written.

Frank Turano

David J. Palmieri

Michael David Zumpano

Josh Stanley

Jack D'Angelo

Christopher Perez

Alicia Durante

Thomas Mazza

Michael Mazza

Kathleen Caridi

Geraldine Greene

Paul Russo

Erica Fraga

George Lewis

VG – Citiva Medical Holdings LLC

By: [redacted]
Name:
Title: Manager

SIGNATURE PAGE TO THE
AMENDED AND RESTATED LIMITED LIABILITY COMPANY OPERATING AGREEMENT
OF
CITIVA MEDICAL LLC.

IN WITNESS WHEREOF, the Parties hereto have entered into this Agreement on the day first above written.

Frank Turano

David J. Palmieri

Michael David Zumpano

Josh Stanley

Jack D'Angelo

Christopher Perez

Alicia Durante

Thomas Mazza

Michael Mazza

Kathleen Caridi

Geraldine Greene

Paul Russo

Erica Fraga

George Lewis

VG – Citiva Medical Holdings LLC

By: [redacted]
Name:
Title: Manager

SIGNATURE PAGE TO THE
AMENDED AND RESTATED LIMITED LIABILITY COMPANY OPERATING AGREEMENT
OF
CITIVA MEDICAL LLC

IN WITNESS WHEREOF, the Parties hereto have entered into this Agreement on the day first above written.

Frank Turano

David J. Palmieri

Michael David Zumpano

Josh Stanley

Jack D'Angelo

Christopher Perez

Alicia Durante

Alicia Durante

Thomas Mazza

Michael Mazza

Kathleen Caridi

Geraldine Greene

Paul Russo

Erica Fraga

George Lewis

VG – Citiva Medical Holdings LLC

By: [redacted]
Name:
Title: Manager

SIGNATURE PAGE TO THE AMENDED AND RESTATED LIMITED LIABILITY COMPANY OPERATING AGREEMENT OF CITIVA MEDICAL LLC

IN WITNESS WHEREOF, the Parties hereto have entered into this Agreement on the day first above written.

Frank Turano

David J. Palmieri

Michael David Zumpano

Josh Stanley

Jack D'Angelo

Christopher Perez

Alicia Durante

Thomas Mazza

Michael Mazza

Kathleen Caridi

Geraldine Greene

Paul Russo

Erica Fraga

George Lewis

VG – Citiva Medical Holdings LLC

By: [redacted]
Name:
Title: Manager

SIGNATURE PAGE TO THE AMENDED AND RESTATED LIMITED LIABILITY COMPANY OPERATING AGREEMENT OF CITIVA MEDICAL LLC

IN WITNESS WHEREOF, the Parties hereto have entered into this Agreement on the day first above written.

Frank Turano

David J. Palmieri

Michael David Zumpano

Josh Stanley

Jack D'Angelo

Christopher Perez

Alicia Durante

Thomas Mazza

Michael Mazza

Kathleen Caridi

Geraldine Greene

Paul Russo

Erica Fraga

George Lewis

VG – Citiva Medical Holdings LLC

By: [redacted]
Name:
Title: Manager

SIGNATURE PAGE TO THE
AMENDED AND RESTATED LIMITED LIABILITY COMPANY OPERATING AGREEMENT
OF
CITIVA MEDICAL LLC

IN WITNESS WHEREOF, the Parties hereto have entered into this Agreement on the day first above written.

Frank Turano

David J. Palmieri

Michael David Zumpano

Josh Stanley

Jack D'Angelo

Christopher Perez

Alicia Durante

Thomas Mazza

Michael Mazza

Kathleen Caridi

Geraldine Greene

Paul Russo

Erica Fraga

George Lewis

VG – Citiva Medical Holdings LLC

By: _____
Name: [redacted]
Title: Manager

Empire Choice, LLC

By:
Name: Kim Volman
Title: Manager

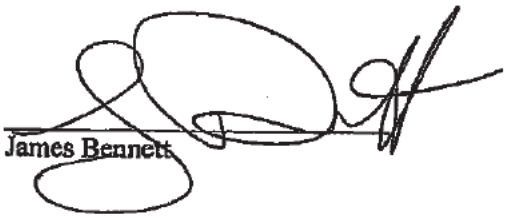

James Bennett

SIGNATURE PAGE TO THE
AMENDED AND RESTATED LIMITED LIABILITY COMPANY OPERATING AGREEMENT
OF
CITIVA MEDICAL LLC

IN WITNESS WHEREOF, the Parties hereto have entered into this Agreement on the day first above written.

Frank Turano

David J. Palmieri

Michael David Zumpano

Josh Stanley

Jack D'Angelo

Christopher Perez

Alicia Durante

Thomas Mazza

Michael Mazza

Kathleen Caridi

Geraldine Greene

Paul Russo

Erica Fraga

George Lewis

VG – Citiva Medical Holdings LLC

By: [redacted]
Name: [redacted]
Title: Manager

SCHEDULE A

MEMBERS

Member	Common Units	Class A Units	Class A Capital Contributions	Date of Capital Contribution	Incentive Units	Total	Ownership Percentage
Frank Turano			Redacted Pursuant to N.Y. Public Officers Law, Art. 6				
Dave Palmieri							
Jack D'Angelo							
Christopher Perez							
VG – Citiva Medical Holdings LLC							
Josh Stanley							
Michael David Zumpano							
Paul Russo							
Erica Fraga							
George Lewis							
Thomas Mazza							
Michael Mazza							
Kathleen Caridi							
Geraldine Greene							
Alicia Durante							
Kim Volman							
Asher Flaum							
James Bennett Pre-RO							
James Bennett Post-RO							

EXHIBIT A

DEFINITIONS

As used in this Agreement, the following terms shall have the following meanings:

"**Additional Member**" means each Member of the Company other than the Members on the date hereof and their respective successors and assigns.

"**Affiliate**" means as to any specified Person (1) any officer, director, employee, shareholder, partner or member of such Person or any Person for which the specified Person serves as an officer, director, employee, shareholder, partner or member or (2) any Person Controlling, Controlled by or under Common Control with such Person.

"**Available Cash from Operations**" means cash from any source, other than Net Proceeds from a Capital Event and Capital Contributions.

"**Business Day**" means Monday through Friday of each week, unless such day is a day on which national banks in New York, New York are not open for business.

"**Capital Contribution**" shall mean, with respect to any Member, the amount of capital contributed by such Member to the Company under this Agreement and subject to such adjustments as are provided hereby, all as determined by the Management Committee.

"**Capital Event**" means: (i) any refinancing, sale, exchange, transfer, condemnation or other disposition of all or a portion of a property, facility, business, subsidiary or division of the Company, including any debt or equity interest therein; (ii) a sale of all or substantially all of the Company's assets; or (iii) proceeds generated from the sale by the Company of equity interests or acceptance of Capital Contributions, including the sale of equity interests in any Subsidiary.

"**Caridi Side Letter**" means that certain letter agreement, dated April [__], 2015, among David Palmieri, Frank Turano and Michael Caridi.

"**Class**" refers to the distinction among Class A Units, Common Units and Incentive Units as set forth in this Agreement.

"**Code**" means the Internal Revenue Code of 1986, as amended from time to time (or any succeeding law).

"**Company Costs**" means all of the costs and expenditures of any kind and payments thereof actually made by or on behalf of the Company in cash during any period with respect to its operations.

"**Company**" means the limited liability company formed pursuant to this Agreement.

"**Control**", "**Controlling**" and "**Controlled by**" means, when used with respect to any specified Person, the ability, directly or indirectly, whether through the ownership of voting

securities, by contract or otherwise, to direct or cause the direction of, alone or in concert with others, the management and policies of a Person.

"**Economic Interest**" means a Member's right to share in the income, gains, losses, deductions, credit, or similar items of, and to receive distributions from, the Company as set forth in this Agreement, but excludes any other rights of a Member, including, without limitation, the right to vote or to participate in management, or, except as may be provided in the New York Act, any right to information concerning the business and affairs of the Company.

"**Event of Bankruptcy**" means the occurrence of any of the following events:

(1) A Member files a petition or answer seeking for himself any reorganization, arrangement, composition, readjustment, liquidation, dissolution or similar relief under any statute, law or regulation;

(2) A Member files a voluntary petition in bankruptcy;

(3) A Member files an answer or other pleading admitting or failing to contest the material allegations of a petition filed against him in any proceeding of this nature; or

(4) A Member is adjudged a bankrupt or insolvent, or has entered against him an order for relief, in any bankruptcy or insolvency proceeding;

(5) A Member makes an assignment for the benefit of creditors;

(6) A Member seeks, consents to or acquiesces in the appointment of a trustee, receiver or liquidator of the Member or of all or any substantial part of his properties.

"**Fiscal Year**" of the Company means the 12-month period ending December 31 of each year, or any other period which constitutes the Company's taxable year for Federal income tax purposes.

"**GAAP**" shall mean generally accepted accounting principles in the United States.

"**Grant Agreement**" means the written agreement between an employee, officer, manager, or consultant or advisor to the Company or any of its subsidiaries pursuant to which the consultant is issued Incentive Units which specifies the vesting and other terms and conditions applicable to such Incentive Units.

"**Indemnitee**" means either a Member or other Person that an Indemnitor is obligated to indemnify, defend and hold harmless pursuant to Article 8 as well as all present and former directors, officers, shareholders, partners, members, employees, agents (including accountants, consultants, attorneys and other professional advisers) and other Affiliates of the specified Indemnitee.

"**Indemnitor**" means the Company, obligated to indemnify, defend and hold harmless an Indemnitee pursuant to Article 8.

"**IRS**" means the U.S. Internal Revenue Service or any successor agency or department with primary responsibility for adopting, interpreting and enforcing provisions of the Code.

"**Lien**" means any lien, mortgage, charge, restriction, option, contractual restriction on transfer, security interest, tax lien, pledge, encumbrance, conditional sale or title retention arrangement, or any other claim of any kind or nature securing any obligation, indebtedness, or any agreement to create or confer any of the foregoing, in each case whether arising by agreement or under any statute or law or otherwise.

"**Members**" means the members set forth on Schedule A and any members of the Company subsequently admitted as members in accordance with this Agreement and the New York Act and shall include, for the avoidance of doubt, the Management Committee.

"Membership Interest" means the entire ownership interest of a Member in the Company at any particular time, including, without limitation, the Voting Interest, Economic Interest, the right of such Member to any and all benefits to which a Member may be entitled as provided in this Agreement and under law, and the obligations of such Member to comply with all of the terms and provisions set forth in this Agreement and under applicable law.

"**Net Proceeds From a Capital Event**" means the proceeds to the Company from a Capital Event, after (i) deducting costs and expenses related to such Capital Event, (ii) the creation of any reserves, and (iii) the satisfaction of any indebtedness being refinanced or discharged concurrently with such Capital Event, regardless of whether such indebtedness involves assets related to such Capital Event.

"**New York Act**" means the New York Limited Liability Company Law, as it may be amended from time to time, and any successor to that act.

"**Ownership Percentage**" means, as to each Member, the percentage reflecting the ratio which the aggregate amount of Common Units, Class A Units and Incentive Units held by such Member bears to the aggregate amount of Common Units, Class A Units and Incentive Units held by all Members. The Ownership Percentage of each Member is set forth opposite such Member's name and under the heading "Ownership Percentage" in Schedule A hereto, as amended from time to time.

"**Parties**" means the Members who have signed the Agreement.

"**Permitted Transferee**" means (i) in the case of any Member who is a natural person, the spouse, divorced spouse, parents, brothers, sisters, children (natural or adopted), stepchildren, and grandchildren of such Member and any trust or other estate planning-related entity established for the sole benefit of such persons, (ii) in the case of any Member that is a corporation, limited liability company, or other entity, any Person Controlling, Controlled by or under common Control with such Member or a Permitted Transferee of such Person, (iii) in the case of Frank Turano or David Palmieri, a transfer of some or all of their Units to Michael Caridi pursuant to the Caridi Side Letter, or (iv) in the case of James Bennett, any Person who is both (A) an Accredited Investor within the meaning of Rule 501 of Regulation D under the Securities Act who makes the representations and warranties contained in Section 6.2 of this Agreement

and (B) approved by the New York State Department of Health as legally eligible to hold the Units transferred.

"**Person**" means an individual or a general partnership, limited partnership, corporation, professional corporation, limited liability company, limited liability partnership, joint venture, trust, business trust, cooperative or association or any other legally-recognized entity.

"**Third Party**" means any Person who is not a Party to this Agreement and not an Affiliate of a Party to this Agreement.

"**Transfer**" and related usages of that term means any sale, transfer, assignment, pledge, hypothecation, granting of a Lien, encumbrance or other disposal, directly or indirectly, of all or any part of a Membership Interest (including economic interests) or any direct or indirect (and no matter how remote) ownership interest in a Member or granting any rights to distributions or proceeds from a Membership Interest in any manner, including any agreement to do so, whether directly or indirectly; voluntarily or involuntarily by operation of law or otherwise or by means of any swap, derivative, or similar transaction or by any of the foregoing with respect to all or a portion of any type of equity, profits, distribution or other ownership interest, and shall include the ability to approve or have any right to vote on, consent to or veto any decision or matter set forth in this Agreement and a right to receive (directly or indirectly) any share or portion of payments of dividends, distributions or profits, and the issuance of any new shares or other equity interests.

"**Transferee**" means a Person who acquires any Membership Interest by Transfer from a Member or another Transferee not admitted as a Member in accordance with Section 7.5(b).

"**Transferring Member**" means any Member which Transfers or proposes to Transfer, any Units or Membership Interest.

"**Treasury Regulations**" means the Income Tax Regulations and Procedures and Administration Regulations promulgated under the Code, as amended from time to time.

"**Triggering Event**" means, with respect to a Member, (i) an Event of Bankruptcy; (ii) the dissolution of marriage applicable to the Selling Member; (iii) the imposition of any pledge, lien, encumbrance or other security interest or involuntary transfer with respect to the Units; or (iv) the good faith determination by the Management Committee that such Member's continued ownership of its Membership Interest is reasonably likely to have a negative effect on the Company's standing with applicable regulatory agencies.

"**Voting Interest**" means, with respect to each Member, the right, if any, of such Member to vote or to participate in management under this Agreement and the New York Act.

The following terms have the meanings defined for such terms in the Sections set forth below:

Term	Section
Account	8.2

Agreement	Preamble
Annual Financial Statements	9.4(a)
Capital Account	Exhibit C
Compelled Sale	7.6(c)
Compelled Sale Notice	7.6(a)
Competing Business	5.5
Confidential Information	5.6(a)
Confidential Materials	5.6(b)
Effective Date	Preamble
Founder	4.1
Management Committee	4.1
Manager	4.1
Member Sale Notice	0
Notice	12.1
Offered Securities	0
Proceeding	8.1
Proposed Purchaser	0
Quarterly Financial Statement	9.4(b)
Remaining Securities	7.3(d)
Response Notice	7.3(c)
Response Notice Deadline	7.3(c)
Sale Proposal	6.5(a)
Second Member Sale Notice	7.3(d)
Second Response Notice	7.3(e)
Selling Member	6.6
Tax Matters Partner	10.3(a)
Triggering Event	6.6
Units	2.1

EXHIBIT B

JOINDER AGREEMENT

Date: _____

Reference is made to that Limited Liability Company Agreement of Citiva Medical LLC, dated as of _____, 2015 (as the same may be amended from time to time, the "LLC Agreement"), among the several members named on Schedule A thereto. A copy of the LLC Agreement is attached hereto as Exhibit A and such LLC Agreement is made part hereof and incorporated herein by reference. Terms used in this Joinder Agreement, but not defined herein, are used herein as defined in the LLC Agreement.

1. In accordance with the provisions of the LLC Agreement, the undersigned has reviewed, and hereby joins in, the LLC Agreement, for purposes of evidencing its consent and agreement to be bound by the terms and provisions of the LLC Agreement under the LLC Agreement of, including the rights and obligations applicable to, an Additional Member and holder of _____ of _____ Units.

2. The undersigned, as an Additional Member, hereby confirms that the representations and warranties contained in Article 6 are true and correct with respect to the undersigned as of the date hereof as if set forth herein.

IN WITNESS WHEREOF, the parties hereto have caused this Joinder Agreement to be executed this _____ day of _____, _____.

_____

[ADDITIONAL MEMBER]

Date: _____, _____

Agreed and accepted:

CITIVA MEDICAL LLC

By:_____
Name:
Title:

EXHIBIT C

TAX ALLOCATIONS

I. Purpose.

This Exhibit C (the "**Exhibit**") is attached to, and constitutes a part of, the Agreement for the purpose of setting forth the rules governing the maintenance of the Capital Account required to be maintained for each Member under the Agreement and the rules governing the allocation of the Company's items of Net Profit and Net Loss, other items of income, gain, loss, deduction and credit, and taxable income, gain, loss, deduction, and credit.

II. Certain Definitions.

1. Certain Additional Definitions

Unless otherwise provided in this Exhibit, all capitalized terms used in this Exhibit shall have the meanings assigned to them in the Agreement of which this Exhibit is a part. In addition, the following definitions shall be for all purposes applied to the terms used in this Exhibit.

"**Adjusted Capital Account**" means the Capital Account maintained for each Member as of the end of each Fiscal Year (i) increased by any amounts which such Member is obligated to restore pursuant to any provision of this Agreement or is deemed to be obligated to restore pursuant to the penultimate sentences of Regulations Sections 1.704-2(g)(1) and 1.704-2(i)(5) and (ii) decreased by the items described in Regulations Sections 1.704-1(b)(2)(ii)(d)(4), 1.704-1(b)(2)(ii)(d)(5) and 1.704-1(b)(2)(ii)(d)(6). The foregoing definition of Adjusted Capital Account is intended to comply with the provisions of Regulations Section 1.704-1(b)(2)(ii)(d) and shall be interpreted consistently therewith.

"**Adjusted Capital Account Deficit**" means, with respect to any Member, the deficit balance, if any, in such Member's Adjusted Capital Account as of the end of the relevant Fiscal Year.

"**Capital Account**" has the meaning set forth in Section 2 of this Exhibit.

"**Carrying Value**" means, with respect to any asset, the asset's adjusted basis for federal income tax purposes, except as follows (i) the initial Carrying Value of any asset contributed by a Member to the Company shall be the gross fair market value of such asset, as determined by the Management Committee, (ii) the Carrying Values of all Company assets shall be adjusted to equal their respective gross fair market values (taking Code Section 7701(g) into account), as determined by the Management Committee, as of the following times: (A) the acquisition of an additional interest in the Company by any new or existing Member in exchange for more than a de minimis Capital Contribution; (B) the distribution by the Company to a Member of more than a de minimis amount of Company property as consideration for an interest in the Company; (C) the liquidation of the Company within the meaning of Regulations Section 1.704-1(b)(2)(ii)(g) (other than pursuant to Code Section 708(b)(1)(B)); and (D) in connection with the grant of an interest in the Company (other than a de minimis interest) as consideration for the provision of services to or for the benefit of the Company by an existing Member acting in a member

capacity, or by a new Member acting in a partner capacity in anticipation of being a Member; provided that an adjustment described in clauses (A), (B), and (D) of this paragraph shall be made only if the Management Committee reasonably determines that such adjustment is necessary to reflect the relative economic interests of the Members in the Company, (iii) the Carrying Value of any item of Company assets distributed to any Member shall be adjusted to equal the gross fair market value (taking Code Section 7701(g) into account) of such asset on the date of distribution as determined by the Management Committee, (iv) the Carrying Values of Company assets shall be increased (or decreased) to reflect any adjustments to the adjusted basis of such assets pursuant to Code Section 734(b) or Section 743(b), but only to the extent that such adjustments are taken into account in determining Capital Accounts pursuant to (A) Regulations Section 1.704-1(b)(2)(iv)(m), provided, however, that Carrying Values shall not be adjusted pursuant to this subparagraph (iv) to the extent that an adjustment pursuant to subparagraph (ii) is required in connection with a transaction that would otherwise result in an adjustment pursuant to this subparagraph (iv), and (v) the Carrying Value of any property shall be adjusted from time to time by the Depreciation taken into account with respect to such asset, for purposes of computing Net Profits and Net Losses.

"**Company Minimum Gain**" shall mean "partnership minimum gain" as set forth in Regulations Section 1.704-2(b)(2), and the amount of Company Minimum Gain, as well as any net increase or decrease in Company Minimum Gain, for a Fiscal Year shall be determined in accordance with the rules of Regulations Section 1.704-2(d).

"**Depreciation**" means, for each Fiscal Year, an amount equal to the federal income tax depreciation, amortization, or other cost recovery deduction allowable with respect to an asset for such year, except that if the Carrying Value of an asset differs from its adjusted basis for federal income tax purposes at the beginning of such year or other period, Depreciation shall be an amount which bears the same ratio to such beginning Carrying Value as the federal income tax depreciation, amortization, or other cost recovery deduction for such year bears to such beginning adjusted tax basis; provided, however, that if the federal income tax depreciation, amortization, or other cost recovery deduction for such year is zero, Depreciation shall be determined with reference to such beginning Carrying Value using any other reasonable method selected by the Management Committee in its reasonable discretion subject to other provisions of this Exhibit.

"**Member Minimum Gain**" means an amount, with respect to each Member Nonrecourse Debt, equal to the Company Minimum Gain that would result if such Member Nonrecourse Debt were treated as a Nonrecourse Liability, determined in accordance with Regulations Section 1.704-2(i)(3).

"**Member Nonrecourse Debt**" shall mean "partner nonrecourse debt" as set forth in Regulations Section 1.704-2(b)(4).

"**Member Nonrecourse Deductions**" shall mean "partner nonrecourse deduction" as set forth in Regulations Section 1.704-2(i)(2), and the amount of Member Nonrecourse Deductions with respect to a Member Nonrecourse Debt for a Fiscal Year shall be determined in accordance with the rules of Regulations Section 1.704-2(i)(2).

"**Net Profit**" or "**Net Loss**" shall mean for each Fiscal Year the Company taxable income or taxable loss for such Fiscal Year, as adjusted pursuant to Section 2.B of this Exhibit.

"**Nonrecourse Deductions**" has the meaning set forth in Regulations Section 1.704-2(b)(1), and the amount of Nonrecourse Deductions for a Fiscal Year shall be determined in accordance with the rules of Regulations Section 1.704-2(c).

"**Nonrecourse Liability**" has the meaning set forth in Regulations Section 1.704-2(b)(3)

"**Partially Adjusted Capital Account**" means, with respect to any Member for any Fiscal Year or other period, the Capital Account balance of such Member at the beginning of such period, adjusted as set forth in Section 2 of this Exhibit for all contributions and distributions during such period and all special allocations pursuant to Section 4 of this Exhibit with respect to such period, but before giving effect to any allocation with respect to such period pursuant to Section 3 of this Exhibit.

"**Regulations**" means the federal income tax regulations issued by the U.S. Department of Treasury in their proposed, temporary and final forms, as amended from time to time.

"**Target Capital Account**" means, with respect to any Member for any Fiscal Year or other period, an amount (which may be either a positive or negative balance) equal to the difference between (i) the hypothetical distribution (if any) such Member would receive if all Company assets, including cash, were sold for cash equal to their Carrying Value (taking into account any adjustments to Carrying Value for such period), all Company liabilities were satisfied in cash according to their terms (limited, with respect to each Nonrecourse Liability of the Company, to the Carrying Value of the assets securing such liability), and the net proceeds to the Company of such sale (after satisfaction of said liabilities) were distributed in full pursuant to Article V and other applicable provisions, if any, of the Agreement on the last day of such period, minus (ii) such Member's share of Company Minimum Gain and Member Minimum Gain, determined as provided in Section 4 of this Exhibit immediately prior to such deemed sale.

2. Capital Accounts of the Members

A. The Company shall maintain for each Member a separate "capital account" ("**Capital Account**") in accordance with the rules of Regulations Section 1.704-1(b)(2)(iv). Such Capital Account shall be increased by (i) the amount of cash contributed or deemed contributed or the gross fair market value of all actual and deemed contributions of property made by such Member to the Company pursuant to this Agreement, (ii) all items of Company income and gain (including income and gain exempt from tax) allocated to such Member pursuant to Section 3 or Section 4 hereof, and (iii) the amount of any Company liabilities assumed by such Member or that are secured by any property distributed to such Member (taking Code Section 752(c) into account), and decreased by (x) the amount of cash distributed or deemed distributed or the Agreed Value of all actual and deemed distributions of cash or property made to such Member pursuant to this Agreement, (y) all items of Company deduction and loss allocated to such Member pursuant to Section 3 or Section 4 hereof, and (z) the amount of any liabilities of such Member assumed by the Company or that are secured by any property contributed by such Member to the Company (taking Code Section 752(c) into account).

B. For purposes of computing the amount of Net Profit or Net Loss to be reflected in the Members' Capital Accounts, the determination, recognition and classification of any item of income, gain, deduction or loss shall be the same as its determination, recognition and classification for federal income tax purposes determined in accordance with Section 703(a) of the Code (for this purpose all items of income, gain, loss or deduction required to be stated separately pursuant to Section 703(a)(1) of the Code shall be included in taxable income or loss), with the following adjustments:

(1) Except as otherwise provided in Regulations Section 1.704-1(b)(2)(iv)(m), the computation of all items of income, gain, loss and deduction shall be made without regard to any election under Section 754 of the Code which may be made by the Company, provided that the amounts of any adjustments to the adjusted bases of the assets of the Company made pursuant to Section 734 of the Code as a result of the distribution of property by the Company to a Member (to the extent that such adjustments have not previously been reflected in the Members' Capital Accounts) shall be reflected in the Capital Accounts of the Members in the manner and subject to the limitations prescribed in Regulations Section 1.704-1(b)(2)(iv) (m)(4).

(2) The computation of all items of income, gain, and deduction shall be made without regard to the fact that items described in Sections 705(a)(1)(B) or 705(a)(2)(B) of the Code are not includable in gross income or are neither currently deductible nor capitalized for federal income tax purposes.

(3) Any income, gain or loss attributable to the taxable disposition of any Company property shall be determined as if the adjusted basis of such property as of such date of disposition were equal in amount to the Company's Carrying Value with respect to such property as of such date.

(4) In lieu of the depreciation, amortization, and other cost recovery deductions taken into account in computing such taxable income or loss, there shall be taken into account Depreciation for such Fiscal Year.

(5) In the event the Carrying Value of any Company asset is adjusted pursuant to the definition of Carrying Value, the amount of any such adjustment shall be taken into account as gain or loss from the disposition of such asset.

(6) Any items specially allocated under Section 4 hereof shall not be taken into account.

C. Generally, a transferee of an interest in the Company shall succeed to a pro rata portion of the Capital Account of the Transferor.

D. The provisions of this Agreement (including this Exhibit) relating to the maintenance of Capital Accounts are intended to comply with Regulations Section 1.704-1(b), and shall be interpreted and applied in a manner consistent with such Regulations. In the event the Management Committee shall determine that it is prudent to modify the manner in which the

Capital Accounts, or any debits or credits thereto (including, without limitation, debits or credits relating to liabilities which are secured by contributed or distributed property or which are assumed by the Company or the Members) are computed in order to comply with such Regulations, the Management Committee may make such modification it deems appropriate, provided that it is not likely to have a material effect on the amounts distributable to any Member pursuant to the Agreement upon the dissolution of the Company. The Management Committee also shall (i) make any adjustments that are necessary or appropriate to maintain equality between the Capital Accounts of the Members and the amount of Company capital reflected on the Company's balance sheet, as computed for book purposes, in accordance with Regulations Section 1.704-1(b)(2)(iv)(q), and (ii) make any appropriate modifications in the event unanticipated events might otherwise cause this Agreement not to comply with Regulations Section 1.704-1(b).

3. General Allocation Rules

After giving effect to the special allocations set forth in Section 4 of this Exhibit, all Net Profit and Net Loss of the Company shall be allocated among the Members in such amounts and ratios as may be necessary to cause the Members' Partially Adjusted Capital Accounts to be as nearly equal to their Target Balances as possible

4. Special Allocation Rules

Notwithstanding any other provision of the Agreement or this Exhibit, the following special allocations shall be made in the following order:

A. Minimum Gain Chargeback. If there is a net decrease in Company Minimum Gain during any Fiscal Year, each Member shall be specially allocated items of Company income and gain for such year (and, if necessary, subsequent years) in an amount equal to such Member's share of the net decrease in Company Minimum Gain, as determined under Regulations Section 1.704-2(g). Allocations pursuant to the previous sentence shall be made in proportion to the respective amounts required to be allocated to each Member pursuant thereto. The items to be so allocated shall be determined in accordance with Regulations Section 1.704-2(f)(6). This Section 4.A is intended to comply with the minimum gain chargeback requirements in Regulations Section 1.704-2(f) and shall be interpreted consistently therewith.

B. Member Minimum Gain Chargeback. Notwithstanding any other provision of the Agreement or this Exhibit (except Section 4.A hereof), if there is a net decrease in Member Minimum Gain attributable to a Member Nonrecourse Debt during any Fiscal Year, each Member who has a share of the Member Minimum Gain attributable to such Member Nonrecourse Debt, determined in accordance with Regulations Section 1.704-2(i)(5), shall be specially allocated items of Company income and gain for such year (and, if necessary, subsequent years) in an amount equal to such Member's share of the net decrease in Member Minimum Gain attributable to such Member Nonrecourse Debt, determined in accordance with Regulations Section 1.704-2(i)(5). Allocations pursuant to the previous sentence shall be made in proportion to the respective amounts required to be allocated to each Member pursuant thereto. The items to be so allocated shall be determined in accordance with Regulations Section 1.704-2(i)(4). This Section 4.B is intended to comply with the minimum gain

chargeback requirement in such Section of the Regulations and shall be interpreted consistently therewith.

C. Qualified Income Offset. In the event any Member unexpectedly receives any adjustments, allocations or distributions described in Regulations Sections 1.704-1(b)(2)(ii)(d)(4), 1.704-1(b)(2)(ii)(d)(5), or 1.704-1(b)(2)(ii)(d)(6), and after giving effect to the allocations required under Sections 4.A and 4.B hereof with respect to such Fiscal Year, such Member has an Adjusted Capital Account Deficit, items of Company income and gain (consisting of a pro rata portion of each item of Company income, including gross income and gain for the Fiscal Year) shall be specially allocated to such Member in an amount and manner sufficient to eliminate, to the extent required by the Regulations, its Adjusted Capital Account Deficit created by such adjustments, allocations or distributions as quickly as possible. This Section 4.C is intended to constitute a "qualified income offset" under Regulations Section 1.704-1(b)(2)(ii)(d) and shall be interpreted consistently therewith.

D. Gross Income Allocation. In the event that any Member has an Adjusted Capital Account Deficit at the end of any Fiscal Year (after taking into account allocations to be made under the preceding paragraphs hereof with respect to such Fiscal Year), each such Member shall be specially allocated items of Company income and gain (consisting of a pro rata portion of each item of Company income, including gross income and gain for the Fiscal Year) in an amount and manner sufficient to eliminate, to the extent required by the Regulations, its Adjusted Capital Account Deficit.

E. Nonrecourse Deductions. Nonrecourse Deductions for any Fiscal Year shall be allocated to the Members in accordance with the respective Ownership Percentages of such Members. If the Management Committee determines in its good faith discretion that the Company's Nonrecourse Deductions must be allocated in a different ratio to satisfy the safe harbor requirements of the Regulations promulgated under Section 704(b) of the Code, the Management Committee is authorized, upon notice to the Members, to revise the prescribed ratio for such Fiscal Year to the numerically closest ratio which would satisfy such requirements.

F. Member Nonrecourse Deductions. Any Member Nonrecourse Deductions for any Fiscal Year shall be specially allocated to the Member who bears the economic risk of loss with respect to the Member Nonrecourse Debt to which such Member Nonrecourse Deductions are attributable in accordance with Regulations Sections 1.704-2(b)(4) and 1.704-2(i).

G. Code Section 754 Adjustments. To the extent an adjustment to the adjusted tax basis of any Company asset pursuant to Section 734(b) or 743(b) of the Code is required, pursuant to Regulations Section 1.704-1(b)(2)(iv)(m), to be taken into account in determining Capital Accounts, the amount of such adjustment to the Capital Accounts shall be treated as an item of gain (if the adjustment increases the basis of the asset) or loss (if the adjustment decreases such basis), and such item of gain or loss shall be specially allocated to the Members in a manner consistent with the manner in which their Capital Accounts are required to be adjusted pursuant to such section of the Regulations.

H. Loss Limitation. Net Losses allocated pursuant to Section 3 hereof shall not exceed the maximum amount of Net Losses that can be allocated without causing any Member to have an Adjusted Capital Account Deficit at the end of any Fiscal Year or other period. In the

event some but not all of the Members would have Adjusted Capital Account Deficits as a consequence of an allocation of Losses pursuant to Section 3 hereof, the limitation set forth in the preceding sentence shall be applied on a Member by Member basis and Net Losses not allocable to any Member as a result of such limitation shall be allocated to the other Members in accordance with the positive balances in such Member's Capital Accounts so as to allocate the maximum permissible Net Losses to each Member under Regulations Section 1.704-1(b)(2)(ii)(d).

5. Allocations for Tax Purposes

A. Except as otherwise provided in this Section 5, for federal income tax purposes, each item of income, gain, loss and deduction shall be allocated among the Members in the same manner as its correlative item of "book" income, gain, loss or deduction is allocated pursuant to Sections 3 and 4 of this Exhibit.

B. In accordance with Code Section 704(c) and the Regulations thereunder, items of income, gain, loss, and deduction with respect to any property having an adjusted basis that differs from its Carrying Value shall, solely for tax purposes, be allocated among the Members so as to take account of any variation between the adjusted basis of such property to the Company for federal income tax purposes and its Carrying Value.

C. To the extent Regulations promulgated pursuant to Section 704(c) of the Code permit an entity that is treated as a partnership for federal income tax purposes to utilize alternative methods to eliminate the disparities between the Carrying Value of property and its adjusted basis, the Company shall use the method the Management Committee elects under Regulations Section 1.704-3.

D. If any interest is transferred during a Fiscal Year, allocations made in this Exhibit for such Fiscal Year shall be allocated, using any permissible method selected at the reasonable discretion of the Management Committee.

Delaware

The First State

I, JEFFREY W. BULLOCK, SECRETARY OF STATE OF THE STATE OF DELAWARE, DO HEREBY CERTIFY THE ATTACHED IS A TRUE AND CORRECT COPY OF THE CERTIFICATE OF FORMATION OF "CITIVA LLC", FILED IN THIS OFFICE ON THE TWELFTH DAY OF NOVEMBER, A.D. 2014, AT 1:13 O'CLOCK P.M.

Jeffrey W. Bullock, Secretary of State

5637874 8100

141399653

AUTHENTICATION: 1857349

DATE: 11-12-14

You may verify this certificate online at corp.delaware.gov/authver.shtml

STATE OF NEW YORK

DEPARTMENT OF STATE

I hereby certify that the annexed copy has been compared with the original document in the custody of the Secretary of State and that the same is true copy of said original.

WITNESS my hand and official seal of the Department of State, at the City of Albany, on February 03, 2015.

Anthony Giardina
Executive Deputy Secretary of State

Rev. 06/07

N. Y. S. DEPARTMENT OF STATE
DIVISION OF CORPORATIONS ND STATE RECORDS ALBANY, NY 12231-0001

FILING RECEIPT

ENTITY NAME: EMPIRE CHOICE LLC

DOCUMENT TYPE: ARTICLES OF ORGANIZATION (DOM LLC) COUNTY: KING

FILED:08/10/2011 DURATION:********* CASH#:110810000968 FILM #:110810000899

FILER:

ALEXANDER ALMONTE, ESQ. P.C.
119 WASHINGTON AVE., STE. 101

ALBANY, NY 12210

EXIST DATE
08/10/2011

ADDRESS FOR PROCESS:

THE LLC
2709 CONEY ISLAND AVE., 2ND FL
BROOKLYN, NY 11235

REGISTERED AGENT:

SERVICE COMPANY: ALEXANDER ALMONTE, ESQ., P.C. - 56 SERVICE CODE: 56 *

FEES	225.00	PAYMENTS	225.00
FILING	200.00	CASH	0.00
TAX	0.00	CHECK	0.00
CERT	0.00	CHARGE	0.00
COPIES	0.00	DRAWDOWN	225.00
NDLING	25.00	OPAL	0.00
		REFUND	0.00

DOS-1025 (04/2007)

Certificate of Filing

This Certifies that the Limited Liability Company named

EMPIRE CHOICE LLC

was filed with the Secretary of State of
NEW YORK
on the 10th of August, 2011

The said Limited Liability Company shall have and may exercise all of the power conferred by the Limited Liability Company Law of the State of New York

Organizer

© 2004 GOES 441
All Rights Reserved

LITHO. IN U.S.A.

Articles of Organization

for

EMPIRE CHOICE LLC

Pursuant to Section 203 of the NYS Limited Liability Company Law

1. The name of the limited liability company is EMPIRE CHOICE LLC

2. The county within this state where the principal office of the limited liability company is

Kings.

3. The Secretary of State is hereby designated as agent of the limited liability company upon whom process against the limited liability company may be served. The Post Office address to which the Secretary of State shall mail a copy of any such process is:

2709 Coney Island Ave., 2nd Fl.
Brooklyn, NY 11235

In witness thereof, the undersigned affirms under the penalties of perjury that the statements contained are true.

s/Anna Dykshteyn
Organizer
Anna Dykshteyn
2709 Coney Island Ave., 2nd Fl.
Brooklyn NY 11235

8/10/11

s/Kim Volman
Organizer
Kim Volman
2709 Coney Island Ave., 2nd Fl.
Brooklyn NY 11235

Limited Liability Company Operating Agreement
of
EMPIRE CHOICE LLC

This Limited Liability Company Operating Agreement of the above, a limited liability company organized pursuant to the New York State Liability Company Law, is entered into and shall be effective as of the Effective Date, by and among the Company and the persons executing this Agreement.

ARTICLE I
DEFINITIONS

For purposes of this Agreement (as defined below), unless the context clearly indicates otherwise, the following terms shall have the following meanings:

1.1 Act. The NY STATE Limited Liability Company Law and all amendments to the Act.

1.2 Additional Contribution. An additional Capital Contribution payable by the Members to the Company pursuant to Article VII.

1.3 Additional Contribution Share. A Member's proportionate share of an Additional Contribution, (i) equal to the product of (A) such Member's Initial Sharing Ratio (set forth in Schedule A to this Agreement) and (B) such Additional Contribution or (ii) as otherwise agreed by the Members under Section 7.2.

1.4 Agreement. This Limited Liability Company Operating Agreement including all amendments adopted in accordance with the Agreement and the Act.

1.5 Articles. The Articles of Organization of the Company, as amended from time to time, and filed with the Department of State of New York.

1.6 Assignee. A transferee of a Membership Interest who has not been admitted as a Substitute Member.

1.7 Bankrupt Person. A Person who: (1) has become the subject of an Order for Relief under the United States Bankruptcy Code by voluntary or involuntary petition, or (2) has initiated, either in an original Proceeding or by way of answer in any state insolvency or receivership Proceeding, an action for liquidation, arrangement, composition, readjustment, dissolution, or similar relief.

1.8 Business Day. Any day other than Saturday, Sunday or any legal holiday observed in the State of NEW YORK.

1.9 Capital Account. The account maintained for a Member or Assignee determined in accordance with Article VII.

1.10 Capital Contribution. Any contribution of Property or services made by or on behalf of a Member or Assignee.

1.11 Commitment. The Capital Contributions that a Member is obligated to make, including a Member's Initial Capital Contribution and any Additional Contribution Share of a Member.

1.12 Company. The company named at beginning of this -Operating Agreement, a limited liability company formed under the laws of, and any successor limited liability company.

1.13 Default Interest Rate. The prime rate published by the Wall Street Journal for the last Business Day on which a Commitment is payable.

1.14 Delinquent Member. A Member who has failed to meet the Commitment of that Member.

1.15 Disposition (Dispose). Any sale, assignment, exchange, mortgage, pledge, grant, hypothecation, or other transfer, absolute or as security or encumbrance (including dispositions by operation of law).

1.16 Dissociation. Any action, which causes a Person to cease to be a Member as described in Article XI hereof.

1.17 Dissolution Event. An event, the occurrence of which will result in the dissolution of the Company under Article XII.

1.18 Distribution. A transfer of Property to a Member on account of a Membership Interest as described in Article VIII.

1.19 Effective Date. The date of filing of the Articles of Organization or such other date as set forth in the Articles of Organization.

1.20 Fiscal Year. The calendar year.

1.21 Initial Capital Contribution. The Capital Contribution agreed to be made by the Members as described in Article VII.

1.22 Initial Membership Interest. The Initial Membership Interest set forth in Schedule A.

1.23 Initial Sharing Ratio. The Initial Sharing Ratio set forth in Schedule A.

1.24 Management Right. The right of a Member to participate in the management of the Company, to vote on any matter, and to grant or to withhold consent or approval of actions of the Company.

1.25 Member. A Person executing the Agreement as a Member, and a Substitute Member.

1.26 Membership Interest. The rights of a Member to Distributions (liquidating or otherwise) and allocations of the profits, losses, gains, deductions, and credits of the Company, and, to the extent permitted by this Agreement, to possess and exercise Management Rights.

1.27 Net Cash Flow. With respect to any fiscal period of the Company, all revenues of the Company during that period decreased by (a) cash expenditures for operating expenses, (b) capital expenditures to the extent not made from reserves, (c) reserves for contingencies and working capital, established in such amounts as the Members may determine, (d) repayment of principal on any financing and (e) taxes.

1.28 Organization. A Person other than a natural person, including without limitation corporations (both non-profit and other corporations), partnerships (both limited and general), joint ventures, limited liability companies, business trusts and unincorporated associations, but the term does not include joint tenancies and tenancies by the entirety.

1.29 Person. An individual, trust, estate, or any Organization permitted to be a member of a limited liability company under the laws of the State.

1.30 Principal Office. The Principal Office of the Company set forth in Section 2.6.

1.31 Proceeding. Any administrative, judicial, or other adversary proceeding, including without limitation litigation, arbitration, administrative adjudication, mediation, and appeal or review of any of the foregoing.

1.32 Property. Any property, real or personal, tangible or intangible, including money, and any legal or equitable interest in such property, but excluding services and promises to perform services in the future.

1.33 Schedule A. Schedule A to this Agreement setting forth the name, address, Initial Capital Contribution, number of Units, Initial Membership Interest and Initial Sharing Ratio of each Member, and the Member designated as the Tax Matters Partner.

1.34 Sharing Ratio. With respect to any Member, as of any date, the ratio (expressed as a percentage) of (i) such Member's Capital Contribution to (ii) the aggregate

Capital Contributions of all Members, or such other ratio as shall be agreed by all Members from time to time. The Initial Membership Interest and Sharing Ratio of each Member is set forth in Schedule A hereof, and Schedule A shall be amended as necessary to conform to any changes thereof agreed to by the Members. In the event all or any portion of a Membership Interest is transferred in accordance with the terms of this Agreement, the transferee shall succeed to the Membership Interest and Sharing Ratio of the transferor to the extent it relates to the transferred Membership Interest.

1.35 Substitute Member. An Assignee who has been admitted to all of the rights of membership pursuant to Section 10.3 of the Agreement.

1.36 Tax Characterization and Additional Tax Terms. It is intended that the Company be characterized and treated as a partnership for, and solely for, federal, state and local income tax purposes. For such purpose, (i) the Company shall be subject to all of the provisions of Subchapter K of Chapter 1 of Subtitle A of the Code, (ii) all references to a "Partner," to "Partners" and to the "Partnership" in this Agreement (including the provisions of Section 7.4 and the provisions of Article VIII) and in the provisions of the Code and Tax Regulations cited in this Agreement shall be deemed to refer to a Member, the Members and the Company, respectively. In addition, the following terms shall have the following meanings:

(a) Adjusted Capital Account Deficit shall mean, with respect to any Member, the deficit balance, if any, in such Member's Capital Account as of the end of the relevant Fiscal Year, after giving effect to the following adjustments:

(i) Credit to such Capital Account the minimum gain charge back that such Member is deemed to be obligated to restore pursuant to the penultimate sentences of Sections 1.704-2(g)(1) and 1.704-2(I)(5) of the Tax Regulations; and

(ii) Debit to such Capital Account the items described in Sections 1.704-1(b)(2)(ii)(d)(4), 1.704-1(b)(2)(d)(5), and 1.704-1(b)(2)(ii)(d)(6) of the Tax Regulations.

The foregoing definition of Adjusted Capital Account Deficit is intended to comply with the provisions of Section 1.704-1(b)(2)(ii)(d) of the Tax Regulations and shall be interpreted consistently therewith.

(b) Code shall mean the Internal Revenue Code of 1986.

(c) Nonrecourse Deductions has the meaning set forth in Section 1.704-2(b)(1) of the Tax Regulations.

(d) Nonrecourse Liability has the meaning set forth in Section 1.704-

(d) Nonrecourse Liability has the meaning set forth in Section 1.704-2(b)(3) of the Tax Regulations.

(e) Partner Nonrecourse Debt has the meaning set forth in Section 1.704-2(b)(4) of the Tax Regulations.

(f) Partner Nonrecourse Debt Minimum Gain means an amount, with respect to each Partner Nonrecourse Debt, equal to the Partnership Minimum Gain that would result if such Partner Nonrecourse Debt were treated as a Nonrecourse Liability, determined in accordance with Section 1.704-2(i)(3) of the Tax Regulations.

(g) Partner Nonrecourse Deductions has the meaning set forth in Sections 1.704-2(i)(1) and 1.704-2(i)(2) of the Tax Regulations.

(h) Partnership Minimum Gain has the meaning set forth in Sections 1.704-2(b)(2) and 1.704-2(d) of the Tax Regulations.

(i) Profits and Losses shall mean, for each Fiscal Year, an amount equal to the Company's taxable income or loss for such Fiscal Year, determined in accordance with Section 703(a) of the Code (for this purpose, all items of income, gain, loss, or deduction required to be stated separately pursuant to Section 703(a)(1) of the Code shall be included in taxable income or loss), with the following adjustments:

(i) any income of the Company that is exempt from federal income tax and not otherwise taken into account in computing Profits or Losses pursuant to this Section 1.36(i) shall be added to such taxable income or loss;

(ii) any expenditures of the Company described in Section 705(a)(2)(B) of the Code or treated as Section 705(a)(2)(B) of the Code expenditures pursuant to Section 1.704-1(b)(2)(iv)(i) of the Tax Regulations, and not otherwise taken into account in computing Profits or Losses pursuant to this Section 1.36(i), shall be subtracted from such taxable income or loss;

(iii) notwithstanding any other provisions of this definition, any items, which are specially allocated pursuant to Sections 8.4, or 8.5 shall not be taken into account in computing Profits or Losses.

The amounts of the items of Partnership income, gain, loss, or deduction available to be specially allocated pursuant to Sections 8.4 or 8.5 shall be determined by applying rules analogous to those set forth in clauses (i) through (iii) above.

(j) Tax Regulations shall mean the federal income tax regulations

promulgated by the United States Treasury Department under the Code as such Tax Regulations may be amended from time to time. All references herein to a specific section of the Tax Regulations shall be deemed also to refer to any corresponding provision of succeeding Tax Regulations.

1.37 Unit. One of the units of Membership Interest that are authorized to be issued under this Agreement. Each Unit represents a Membership Interest with an Initial Sharing Ratio of 1 percent (1 %)subject to adjustment as provided herein. A Unit is divisible into fractional parts. References to Units herein shall be solely for the purpose of certificating the Membership Interests authorized hereunder. Voting, the granting or withholding of consents or approvals, and allocation of Profits and Losses and Distributions shall be made pursuant to the applicable provisions of this Agreement without reference to the number of Units held by Members.

ARTICLE II
FORMATION

2.1 Organization. The Members hereby organize the Company as a limited liability company pursuant to the provisions of the Act.

2.2 Agreement. For and in consideration of the mutual covenants herein contained and for other good and valuable consideration, the receipt and sufficiency of which is hereby acknowledged, the Members executing the Agreement hereby agree to the terms and conditions of the Agreement, as it may from time to time be amended. It is the express intention of the Members that the Agreement shall be the sole source of agreement of the parties, and, except to the extent a provision of the Agreement expressly incorporates federal income tax rules by reference to sections of the Code or Tax Regulations or is expressly prohibited or ineffective under the Act, the Agreement shall govern, even when inconsistent with, or different than, the provisions of the Act or any other law or rule. To the extent any provision of the Agreement is prohibited or ineffective under the Act, the Agreement shall be deemed to be amended to the least extent necessary in order to make the Agreement effective under the Act. In the event the Act is subsequently amended or interpreted in such a way to make any provision of the Agreement that was formerly invalid valid, such provision shall be considered to be valid from the effective date of such interpretation or amendment.

2.3 Name. The name of the Company is the name set forth at the beginning of this Operating Agreement, and all business of the Company shall be conducted under that name.

2.4 Term. The Company shall be dissolved and its affairs wound up in accordance with the Act and the Agreement on Dec 3130 unless the term shall be extended by amendment to the Agreement and the Articles, or unless the Company shall be sooner dissolved and its affairs wound up in accordance with the Act or the Agreement.

2.5 Registered Agent and Office. The registered agent for the service of process and the registered office shall be that Person and location reflected in the Articles. The Members, may, from time to time, change the registered agent or office through appropriate filings with the Department of State of New York. In the event the registered agent ceases to act as such for any reason or the registered office shall change, the Members shall promptly designate a replacement registered agent or file a notice of change of address as the case may be.

2.6 Principal Office. The Principal Office of the Company shall be located at

2709 Coney Island Ave Brooklyn, NY 11235

2.7 Publication. Within 120 days after the Effective Date, the Members shall cause a notice containing the substance of the Articles, in the form required by the Act, to be published once in each week for six successive weeks in two newspapers of the county in which the Principal Office is located.

ARTICLE III
PURPOSE; NATURE OF BUSINESS

The business purpose of the Company is to engage in any and all business activities permitted under the laws of the State of New York.

The Company shall have the authority to do all things necessary or convenient to accomplish its purpose and operate its business as described in this Article III. The Company exists only for the purpose specified in this Article III, and may not conduct any other business without the unanimous consent of the Members. The authority granted to the Members hereunder to bind the Company shall be limited to actions necessary or convenient to this business.

ARTICLE IV
ACCOUNTING AND RECORDS

4.1 Records to be Maintained. The Company shall maintain the following records at the Principal Office: 2709 Coney Island Ave Brooklyn, NY 11235

(a) a current list of the full name set forth in alphabetical order and last known mailing address of each Member, together with the information set forth on Schedule A relating to each Member's Initial Capital Contribution, number of Units, Membership Interest and Sharing Ratio;

(b) a copy of the Articles and all amendments thereto, together with executed copies of any powers of attorney pursuant to which the Articles or any such amendment has been executed;

(c) a copy of the Company's federal, state and local income or information tax returns and reports for the three most recent Fiscal Years;

(d) a copy of this Agreement including all amendments thereto; and

(e) the Company's books and records, including financial statements of the Company, which shall be open to inspections by the Members or their agents at reasonable times.

4.2 Reports to Members. The Company shall provide reports, including a balance sheet, statement of profit and loss and changes in Members' accounts, and a statement of cash flows, at least annually to the Members at such time and in such manner as the Members may determine reasonable.

4.3 Tax Returns and Reports. The Members, at Company expense, shall prepare and timely file income tax returns of the Company in all jurisdictions where such filings are required, and the Company shall prepare and deliver to each Member, within ninety (90) days after the expiration of each Fiscal Year, and at Company expense, all information returns and reports required by the Code and Tax Regulations and Company information necessary for the preparation of the Members' federal income tax returns.

ARTICLE V
NAMES AND ADDRESSES OF MEMBERS

The names and addresses of the Members are as stated on Schedule A.

ARTICLE VI
RIGHTS AND DUTIES OF MEMBERS

6.1 Management Rights. Management of the Company shall be vested in all of its Members, who shall manage the Company solely in their capacity as Members of the Company. Each Member shall have authority to bind the Company. Any matter that requires the vote or consent of the Members shall be decided by the Members holding at least a majority of the Membership Interests, except that (a) the assignment of a Membership Interest and the admission of a Substitute Member shall require the approvals set forth in Sections 10.2 and 10.3, and (b) the following actions shall require the consent of all of the Members:

a) any amendment to the Agreement or to the Articles;

b) the sale of Company Property other than in the ordinary course of business;

(c) The merger or consolidation of the Company with any other Person;

(d) the continuation of the Company after a Dissolution Event;

(e) the borrowing of funds or the pledging, mortgaging or otherwise encumbering of any Company Property, except in the ordinary course of business.

(f) the admission of a new Member; and

(g) the requirement that Additional Contributions be made.

6.2 Liability of Members. No Member shall be liable as such for the liabilities of the Company.

6.3 Indemnification. A Member shall indemnify the Company for any costs or damages incurred by the Company as a result of any unauthorized action by such Member.

6.4 Representations and Warranties. Each Member, and in the case of a trust or other entity, the person(s) executing the Agreement on behalf of the entity, hereby represents and warrants to the Company and each other Member that: (a) if that Member is an entity, it has power to enter into the Agreement and to perform its obligations hereunder and that the person(s) executing the Agreement on behalf of the entity has the power to do so; and (b) the Member is acquiring its interest in the Company for the Member's own account as an investment and without an intent to distribute the interest. The Members acknowledge that their interests in the Company have not been registered under the Securities Act of 1933 or any state securities laws, and may not be resold or transferred without appropriate registration or the availability of an exemption from such requirements.

6.5 Conflicts of Interest.

(a) A Member shall be entitled to enter into transactions that may be considered to be competitive with the Company, it being expressly understood that Members may enter into transactions that are similar to the transactions into which the Company may enter. Notwithstanding the foregoing, Members shall account to the Company and hold as trustee for it any Property, profit, or benefit derived by the Member, without the consent of all of the other Members, in the conduct and winding up of the Company business or from a use or appropriation by the Member of Company Property including information developed exclusively for the Company and opportunities expressly offered to the Company.

(b) A Member does not violate a duty or obligation to the Company merely because the Member's conduct furthers the Member's own interest. A Member may lend money to and transact other business with the Company. The rights and obligations of a Member who lends money to or transacts business with the Company are the same as those of a person who is not a Member, subject to other applicable

law. No transaction with the Company shall be voidable solely because a Member has a direct or indirect interest in the transaction if the transaction is fair and reasonable to the Company.

6.6 Member's Standard of Care. Each Member shall discharge the Member's duties to the Company and the other Members in good faith and with that degree of care that an ordinarily prudent person in a similar position would use under similar circumstances. In discharging its duties, a Member shall be fully protected in relying in good faith upon the records required to be maintained under Article IV and upon such information, opinions, reports or statements by any Person as to matters the Member reasonably believes are within such other Person's professional or expert competence and who has been selected with reasonable care by or on behalf of the Company, including information, opinions, reports or statements as to the value and amount of the assets, liabilities, profits or losses of the Company or any other facts pertinent to die existence and amount of assets from which Distributions to Members might properly be paid. The Company shall indemnify and hold harmless each Member against any loss, damage or expense (including attorneys' fees) incurred by the Member as a result of any act performed or omitted on behalf of the Company or in furtherance of the Company's interests without, however, relieving the Member of liability for failure to perform his or her duties in accordance with the standards set forth herein. The satisfaction of any indemnification and any holding harmless shall be from and limited to Company Property and the other Members shall not have any personal liability on account thereof.

ARTICLE VII
CONTRIBUTIONS AND CAPITAL ACCOUNTS

7.1 Initial Contributions. Each Member shall make the Initial Capital Contribution described for that Member on Schedule A at the time and on the terms specified in Schedule A and shall perform that Member's Commitment, and shall receive the number of Units of Membership Interest and Sharing Ratio described for that Member on Schedule A. The Company shall issue certificates representing the Units subscribed for by the Members. No Member shall have the right to withdraw or be repaid any Capital Contribution except as provided in the Agreement.

7.2 Additional Contributions. In addition to the Initial Capital Contributions, the Members shall make such Additional Contributions (in accordance with their respective Additional Contribution Shares) as shall be determined with the consent of all the Members. Upon the unanimous agreement of the Members, the Members shall make such Additional Contributions in accordance with such agreement.

7.3 Enforcement of Commitments. In the event any Member (a Delinquent Member) fails to perform the Delinquent Member's Commitment, the other Members shall give the Delinquent Member a notice of such failure. If the Delinquent Member fails to

perform the Commitment (including the payment of any costs associated with the failure and interest at the Default Interest Rate) within ten Business Days of the giving of such notice, the other Members may take such action as they deem appropriate, including but not limited to enforcing the Commitment in the court of appropriate jurisdiction in the state in which the Principal Office is located or the state of the Delinquent Member's address as reflected in the Agreement. Each Member expressly agrees to the jurisdiction of such courts but only for purposes of such enforcement.

7.4 Capital Account. A separate capital account shall be maintained for each Member throughout the term of the Company in accordance with the rules of Section 1.704-1(b)(2)(iv), of the Tax Regulations as in effect from time to time, and, to the extent not inconsistent therewith, to which the following provisions apply:

(a) to each Member's Capital Account there shall be credited (i) the amount of money contributed by such Member to the Company (including liabilities of the Company assumed by such Member as provided in Section 1.704-1(b)(2)(iv)(c) of the Tax Regulations); (ii) the fair market value of any property contributed to the Company by such Member (net of liabilities secured by such contributed property that the Company is considered to assume or take subject to under Section 752 of the Code); and (iii) such Member's share of Profits and items of income and gain that are specially allocated.

(b) to each Member's Capital Account there shall be debited (i) the amount of money distributed to such Member by the Company (including liabilities of such Member assumed by the Company as provided in Section 1.704-1(b)(2)(iv)(c) of the Tax Regulations) other than amounts which are in repayment of debt obligations of the Company to such Member; (ii) the fair market value of property distributed to such Member (net of liabilities secured by such distributed property that such Member is considered to assume or take subject to under Section 752 of the Code); and (iii) such Member's share of Losses or items of loss or deduction that are specifically allocated.

(c) the Capital Account of a transferee Member shall include the appropriate portion of the Capital Account of the Member from whom the transferee Member's interest was obtained.

(d) in determining the amount of any liability, there shall be taken into account Section 752(c) of the Code and any other applicable provisions of the Code and Tax Regulations.

The foregoing provisions and the other provisions of this Agreement relating to the maintenance of Capital Accounts are intended to comply with Section 1.704-1(b) of the Tax Regulations, and shall be interpreted and applied in a manner consistent with such Tax Regulations. In the event the Members shall determine that it is prudent to modify the

manner in which the Capital Accounts, or any debits or credits thereto (including, without limitation, debits or credits relating to liabilities that are secured by contributed or distributed property or that are assumed by the Company or any Member), are computed in order to comply with such Tax Regulations, the Members may make such modification, provided that it is not likely to have a material effect on the amounts distributable to any Member pursuant to Article 3:II hereof upon the dissolution of the Company. The Members also shall (i) make any adjustments that are necessary or appropriate to maintain equality between the Capital Accounts of the Members and the amount of Company capital reflected on the Company's balance sheet, as computed for book purposes, in accordance with Section 1.704-1(b)(2)(iv)(g) of the Tax Regulations and (ii) make any appropriate modifications in the event unanticipated events might otherwise cause this Agreement not to comply with Section 1.704-1(b) of the Tax Regulations.

7.5 No Obligation to Restore Deficit Balance. Except as required by law, no Member shall be required to restore any deficit balance in its Capital Account.

7.6 Withdrawal; Successors. A Member shall not be entitled to withdraw any part of its Capital Account or to receive any distribution from the Company, except as specifically provided in the Agreement, and no Member shall be entitled to make any capital contribution to the Company other than the Commitments. Any Member, including any additional or Substitute Member, who shall receive an interest in the Company or whose interest in the Company shall be increased by means of a transfer to it of all or part of the interest of another Member, shall have a Capital Account with respect to such interest initially equal to the Capital Account with respect to such interest of the Member from whom such interest is acquired except as otherwise required to account for any step up in basis resulting from a termination of the Company under Section 708 of the Code by reason of such interest transfer.

7.7 Interest. No Member shall be entitled to interest on such Member's Capital Contribution or on any Profits retained by the Company.

7.8 Investment of Capital Contributions. The Capital Contributions of the Members shall be invested in demand, money market or time deposits, obligations, securities, investments or other instruments constituting cash equivalents, until such time as such funds shall be used for Company purposes. Such investments shall be made for the benefit of the Company.

7.9 No Personal Liability. No Member shall have any personal liability for the repayment of any Capital Contributions of any Member.

ARTICLE VIII
ALLOCATIONS AND DISTRIBUTIONS

8.1 Profits and Losses. Profits and Losses, and each item of Company income, gain, loss, deduction, credit and tax preference with respect thereto, for each Fiscal Year (or shorter period in: respect of which such items are to be allocated) shall be allocated among the Members as provided in this Article VIII.

8.2 Profits. After giving effect to the special allocations set forth in Sections 8.4 and 8.5, Profits for any Fiscal Year shall be allocated in the following order of priority:

(a) first, to the Members, if any, who received any allocation of Losses under Section 8.3(c), in proportion to (and to the extent of) the excess, if any, of (i) the cumulative Losses allocated to such Members pursuant to Section 8.3(c) for all prior Fiscal Years, over (ii) the cumulative Profits allocated to such Members pursuant to this Section 8.2(a) for all prior Fiscal Years;

(b) second, to the Members, in proportion to (and to the extent of) the excess, if any, of (i) the cumulative Losses allocated to each Member pursuant to Section 8.3(b) hereof for all prior Fiscal Years, over (H) the cumulative Profits allocated to each Member pursuant to this Section 8.2(b) for all prior Fiscal Years;

(c) third, to the Members, in proportion to (and to the extent of) the excess, if any, of (i) the cumulative Losses allocated to each Member pursuant to Section 8:3(a)(ii) hereof for all prior Fiscal Years, over (ii) the cumulative Profits allocated to such Member pursuant to this Section 8.2(c) for all prior Fiscal Years;

(d) fourth, the balance of the Profits remaining, if any, among the Members, pro rata, in proportion to their respective Sharing Ratios.

8.3 Losses. After giving effect to the special allocations set forth in Sections 8.4 and 8.5, Losses shall be allocated as set forth in Section 8.3(a), subject to the limitation in Section 8.3(b) below, and, if applicable, as provided in Section 8.3(c).

(a) losses for any Fiscal Year shall be allocated in the following order of priority:

(i) first, to the Members in proportion to and to the extent of the excess, if any, of (A) the cumulative Profits allocated to each such Partner pursuant to Section 8.2(d) hereof for all prior Fiscal Years, over (B) the cumulative Losses allocated to such Partner pursuant to this Section 8.3(a)(i) for all prior Fiscal Years; and

(ii) the balance, if any, among the Members in proportion to their respective Sharing Ratios.

(b) the Losses allocated pursuant to Section 8.3(a) hereof shall not exceed the maximum amount of Losses that can be so allocated without causing any Member to have an Adjusted Capital Account Deficit at the end of any Fiscal Year. In the event some, but not all, of the Members would have Adjusted Capital Account Deficits as a consequence of an allocation of Losses pursuant to Section 8.3(a) hereof, the limitation set forth in this Section 8.3(b) shall be applied on a Member-by-Member basis so as to allocate the maximum permissible Losses to the Members under Section 1.704-1(b)(2)(ii)(d) of the Tax Regulations.

(c) in the event that there are any remaining Losses in excess of the limitations set forth in Section 8.3(b), such remaining Losses shall be allocated among the Members in proportion to their respective Sharing Ratios.

8.4 Special Allocations. The following special allocations shall be made in the following order:

(a) Minimum Gain Charge back. Except as otherwise provided in Section 1.704-2(f) of the Tax Regulations, notwithstanding any other provision of this Article VIII, if there is a net decrease in Partnership Minimum Gain during any Fiscal Year, each Member shall be specially allocated items of Company income and gain for such Fiscal Year (and, if necessary, subsequent Fiscal Years) in an amount equal to such Member's share of the net decrease in Partnership Minimum Gain, determined in accordance with Section 1.704-2(g) of the Tax Regulations. Allocations pursuant w the previous sentence shall be made in proportion to the respective amounts required to be allocated to each Member pursuant thereto. The items to be so allocated shall be determined in accordance with Sections 1.704-2(f)(6) and 1.704-2(j)(2) of the Tax Regulations. This Section 8.4(a) is intended to comply with the minimum gain charge back requirement in Section 1.704-2(f) of the Tax Regulations and shall be interpreted consistently therewith.

(b) Partner Minimum Gain Charge back. Except as otherwise provided in Section 1.704-2(i)(4) of the Tax Regulations, notwithstanding any other provision of this Article VIII, if there is a net decrease in Partner Nonrecourse Debt Minimum Gain attributable to a Partner Nonrecourse Debt during any Fiscal Year, each Member who has a share of the Partner Nonrecourse Debt Minimum Gain attributable to such Partner Nonrecourse Debt, determined in accordance with Section 1.704-2(i)(5) of the Tax Regulations, shall be specially allocated items of Company income and gain for such Fiscal Year (and, if necessary, subsequent Fiscal Years) in an amount equal to such Member's share of the net decrease in Partner Nonrecourse Debt Minimum Gain attributable to such Partner Nonrecourse Debt, determined in accordance with Section

[illegible] share of the net [illegible]

1.704-2(i)(4) of the Tax Regulations. Allocations pursuant to the previous sentence shall be made in proportion to the respective amounts required to be allocated to each Member pursuant thereto: The items to be so allocated shall be determined in accordance with Sections 1.704-2(i)(4) and 1.704-2(j)(2) of the Tax Regulations. This Section 8.4(b) is intended to comply with the minimum gain charge back requirement in Section 1.704-2(f)(4) of the Tax Regulations and shall be interpreted consistently therewith.

(c) Qualified Income Offset. In the event any Member unexpectedly receives any adjustments, allocations, or distributions described in Section 1.704-1(b)(2)(ii)(d)(4), Section 1.704 1(b)(2)(ii)(d)(5), or Section 1.704-1(b)(2)(ii)(d)(6) of the Tax Regulations, items of Company income and gain shall be specially allocated to the Member in an amount and manner sufficient to eliminate, to the extent required by the Tax Regulations, the Adjusted Capital Account Deficit of the Member as quickly as possible, provided that an allocation pursuant to this Section 8.4(c) shall be made only if and to the extent that the Member would have an Adjusted Capital Account Deficit after all other allocations provided for in this Article VIII have been tentatively made as if this Section 8.4(c) were not in this Agreement.

(d) Gross Income Allocation. In the event any Member has a deficit Capital Account at the end of any Fiscal Year which is in excess of the sum of the amounts such Member is deemed to be obligated to restore pursuant to the penultimate sentences of Sections 1.704-2(g)(1) and 1.704-2(i)(5) of the Tax Regulations, each such Member shall be specially allocated items of Company income and gain in the amount of such excess as quickly as possible, provided that an allocation pursuant to this Section 8.4(d) shall be made only if and to the extent that such Member would have a deficit Capital Account in excess of such sum after all other allocations provided for in this Article VIII have been made as if Section 8.4(c) and this Section 8.4(d) were not in this Agreement.

(e) Nonrecourse Deductions. Nonrecourse Deductions for any Fiscal Year shall be specially allocated among the Members in proportion to their Sharing Ratios.

(f) Partner Nonrecourse Deductions. Any Partner Nonrecourse Deductions for any Fiscal Year shall be specially allocated to the Member who bears the economic risk of loss with respect to the Partner Nonrecourse Debt to which such Partner Nonrecourse Deductions are attributable in accordance with Section 1.704-2(i)(1) of the Tax Regulations.

(g) Mandatory Allocations Under Section 704(c) of the Code. Notwithstanding the foregoing provisions of this Section 8.4, in the event Section 704(c) of the Code or Section 704(c) of the Code principles applicable under Section 1.704-1(b)(2)(iv) of the Tax Regulations require allocations of Profits or Losses in a

manner different than that set forth above, the provisions of Section 704(c) of the Code and the Tax Regulations hereunder shall control such allocations among the Members. Any item of Company income, gain, loss and deduction with respect to any property (other than cash) that has been contributed by a Member to the capital of the Company or which has been revalued for Capital Account purposes pursuant to Section 1.704-1(b)(2)(iv) of the Tax Regulations) and which is required or permitted to be allocated to such Member for income tax purposes under Section 704(c) of the Code so as to take into account the variation between the tax basis of such property and its fair market value at the time of its contribution shall be allocated solely for income tax purposes in the manner so required or permitted under Section 704(c) of the Code using the "traditional method" described in Section 1.704-3(b) of the Tax Regulations; provided, however, that curative allocations consisting of the special allocation of gain or loss upon the sale or other disposition of the contributed property shall be made in accordance with Section 1.704-3(c) of the Tax Regulations to the extent necessary to eliminate any disparity, to the extent possible, between the Members' book and tax Capital Accounts attributable to such property; further provided, however, that any other method allowable under applicable Tax Regulations may be used for any contribution of property as to which there is agreement between the contributing Member and the other Members.

8.5 Curative Allocations. The allocations set forth in Sections 8.4 (a) through (g) (the "Regulatory Allocations") are intended to comply with certain requirements of the Tax Regulations. It is the intent of the Members that, to the extent possible, all Regulatory Allocations shall be offset either with other Regulatory Allocations or with special allocations of other items of Company income, gain, loss, or deduction pursuant to this Section 8.5. Therefore, notwithstanding any other provision of this Article VIII (other than the Regulatory Allocations), the Members shall make such offsetting special allocations of Company income, gain, loss, or deduction in whatever manner it determines appropriate so that, after such offsetting allocations are made, each Member's Capital Account balance is, to the extent possible, equal to the Capital Account balance such Member would have had if the Regulatory Allocations were not part of this Agreement and all Company items were allocated pursuant to Sections 8.2 and 8.3. The Members (i) shall take into account future Regulatory Allocations under Sections 8.4(a) and 8.4(b) that, although not yet made, are likely to offset other Regulatory Allocations previously made under Sections 8.4(e) and 8.4(f) and (ii) may reallocate Profits and Losses for prior open years (or items of gross income and deduction of the Company for such years) among the Members to the extent it is not possible to achieve such result with allocations of items of income (including gross income) and deduction for the current year and future years. This Section 8.5 shall control notwithstanding any reallocation or adjustment of taxable income, taxable loss, or items thereof by the Internal Revenue Service or any other taxing authority.

8.6 Other Allocation Rules:

As to be determined by the Members

(a) for purposes of determining the Profits, Losses, or any other item allocable to any period (including allocations to take into account any changes in any Member's Sharing Ratio during a Fiscal Year and any transfer of any interest in the Company), Profits, Losses, and any such other item shall be determined on a daily, monthly, or other basis, as determined by the Members using any permissible method under Section 706 of the Code and the Tax Regulations thereunder.

(b) the Members are aware of the income tax consequences of the allocations made by this Article VIII and hereby agree to be bound by the provisions of this Article VIII in reporting their shares of Company income and loss for income tax purposes.

(c) solely for purposes of determining a Member's proportionate share of the "excess nonrecourse liabilities of the Partnership within the meaning of Section 1.752-3(a)(3) of the Tax Regulations, the Members' interests in Company Profits are in proportion to their Sharing Ratios.

(d) to the extent permitted by Section 1.7042(h)(3) of the Tax. Regulations, the Members shall endeavor to treat distributions of Net Cash Flow as having been made from the proceeds of a Nonrecourse Liability or a Partner Nonrecourse Debt only to the extent that such distributions would cause or increase an Adjusted Capital Account Deficit for any Partner.

(e) except as otherwise provided in this Article VIII, an allocation of Company Profits or Losses to a Member shall be treated as an allocation to such Member of the same share of each item of income, gain, loss and deduction taken into account in computing such Profits or Losses.

(f) for purposes of determining the character (as ordinary income or capital gain) of any Profits allocated to the Members pursuant to this Article VIII, such portion of Profits that is treated as ordinary income attributable to the recapture of depreciation shall, to the extent possible, be allocated among the Members in the proportion which (i) the amount of depreciation previously allocated to each Member bears to (ii) the total of such depreciation allocated to all Members. This section 8.6(f) shall not alter the amount of allocations among the Members pursuant to this Article VIII, but merely the character of income so allocated.

(g) except for arrangements expressly described in this Agreement, no member shall enter into (or permit any Person related to the Member to enter into) any arrangement with respect to any liability of the Company that would result in such Member (or a person related to such Member under Section 1.752-4(b) of the Tax Regulations) bearing the economic risk of loss (within the meaning of Section 1.752-2 of the Tax Regulations) with respect to such liability unless such arrangement

has been approved by all Members. To the extent a Member is permitted to guarantee the repayment of any Company indebtedness under this Agreement, each of the other Members shall be afforded the opportunity to guarantee such Member's pro rata share of such indebtedness, determined in accordance with the Members' respective Sharing Ratios.

8.7 Distribution of Net Cash Flow.

(a) Amounts and Timing. Net Cash Flow shall be distributed to the Members in proportion to their respective shares of Profits allocated to each of them for such period (and prior periods) under Section 8.2, to the extent that such amounts have not been distributed previously under this Section 8.7. Such distributions shall be made within 90 days of the end of each Fiscal Year to those persons recognized on the books of the Company as Members or as Assignees on the last day of such Fiscal Year.

(b) Amounts Withheld. All amounts withheld pursuant to the Code and Tax Regulations or any provision of any state or local tax law with respect to any payment, distribution, or allocation to the Company or the Members shall be treated as amounts distributed to the Members pursuant to this Section 8.7 for all purposes under this Agreement. The Members are authorized to withhold from distributions, or with respect to allocations, to the Members and to pay over to any federal, state, or local government any amounts required to be so withheld pursuant to the Code and Tax Regulations or any provisions of any other federal, state, or local law, and shall allocate any such amounts to the Members with respect to which such amount was withheld.

(c) Draws for Payment of Estimated Taxes. The Company may pay to each Member a quarterly draw, not to exceed the amount reasonably necessary to provide for payment by the Members of any federal, state and local estimated taxes with respect to Profits allocated to the Members pursuant to this Article VIII, and each such draw, if any, shall be treated as a loan from the Company to each Member receiving such draw and shall be deemed repaid by reducing the amount of each subsequent distribution to the Member receiving such draw pursuant to this Section 8.7(c) by the lesser of (a) the entire amount otherwise distributable to the Member receiving such draw and (b) the entire amount of any unrepaid draws pursuant to this Section 8.7(c). All draws hereunder shall be made to the Members pro rata based on their estimated respective shares of Profits allocated to each of them for such Fiscal Year under this Article VIII. Any draw by any Member made pursuant to this Section 8.7(c) shall not result in any decrease in the Sharing Percentage of such Member.

ARTICLE IX
TAXES

9.1 Tax Matters Partner. The Member designated as such on Schedule A shall be the Tax Matters Partner of the Company pursuant to Section 6231(a)(7) of the Code. Such Member shall not resign as the Tax Matters Member unless, on the effective date of such resignation, the Company has designated another Member as Tax Matters Member and such Member has given its consent in writing to its appointment as Tax Matters Member. The Tax Matters Member shall receive no additional compensation from the Company for its services in that capacity, but all expenses incurred by the Tax Matters Member in such capacity shall be borne by the Company. The Tax Matters Member is authorized to employ such accountants, attorneys and agents as it, in its sole discretion, determines is necessary to or useful in the performance of its duties. In addition, such Member shall serve in a similar capacity with respect to any similar tax related or other election provided by state or local laws.

9.2 Mandatory Section 754 Election. Upon a transfer by a Member of an interest in the Company, which transfer is permitted by the terms of this Agreement, or upon the death of a Member or the distribution of any Company Property to one or more Members, the Members, upon the request of one or more of the transferees or distributees, shall cause the Company to file an election on behalf of the Company, pursuant to Section 754 of the Code, to cause the basis of the Company's property to be adjusted for federal income tax purposes in the manner prescribed in Section 734 or Section 743 of the Code, as the case may be. The cost of preparing such election, and any additional accounting expenses of the Company occasioned by such election, shall be borne by such transferees or distributees.

ARTICLE X
TRANSFER OF MEMBERSHIP INTEREST

10.1 Compliance with Securities Laws. No Unit of Membership Interest has been registered under the Securities Act of 1933, as amended, or under any applicable state securities laws. A Member may not transfer (a transfer, for purposes of this Agreement, shall be deemed to include, but not be limited to, any sale, transfer, assignment, pledge, creation of a security interest or other disposition) all or -any part of such Member's Units of Membership Interest, except upon compliance with the applicable federal and state securities laws. The Members shall have no obligation to register any Member's Units of Membership Interest under the Securities Act of 1933, as amended, or under any applicable state securities laws, or to make any exemption therefrom available to any Member.

10.2 Transfer of Economic Interest. The right to receive allocations of Profits and Losses and to receive Distributions may not be transferred in whole or in part unless the following terms and conditions have been satisfied:
The transferor shall have:

(a) assumed all costs incurred by the Company in connection with the transfer;

(b) furnished the Company with a written opinion of counsel, satisfactory in form and substance to counsel for the Company, that such transfer complies with applicable federal and state securities laws and the Agreement and that such transfer, for federal income tax purposes, will not cause the termination of the Company under Section 708(b) of the Code, cause the Company to be treated as an association taxable as a corporation for income tax purposes or otherwise adversely affect the Company or the Members; and

(c) complied with such other conditions as the Members may reasonably require from time to time.

Transfers will be recognized by the Company as effective only upon the close of business on the last day of the calendar month following satisfaction of the above conditions. Any transfer in contravention of this Article X and any transfer which if made would cause a termination of the Company for federal income tax purposes under Section 708(b) of the Code shall be void ab initio and ineffectual and shall not bind the Company or the other Members.

10.3 Transfer of Membership Interest and Admission of Substitute Member. Except for the right to receive allocations of Profits and Losses and to receive Distributions, a Membership Interest of any Member may not be transferred in whole or in part, and a transferee shall not have a right to become a Member unless the following terms and conditions have been satisfied:

(a) all of the other Members shall have consented in writing to the transfer and substitution, which consent may be arbitrarily withheld by any such Member;

(b) the transferee shall have assumed the obligations, if any, of the transferor to the Company, including the obligation to fulfill the pro rata portion of the transferor's then existing or subsequently arising commitment allocable to the transferred Unit of Membership Interest or portion thereof; and

(c) the transferor and the transferee shall have complied with such other requirements as the non-transferring Members may reasonably impose, including the conditions that the transferee:

(i) adopt and approve in writing all the terms and provisions of the Agreement then in effect; and

(ii) pay such fees as may be reasonable to pay the costs of the Company in effecting such substitution.

10.4 Status of Transferee. A transferee of a Unit of Membership Interest who is not a Substitute Member shall be entitled only to receive that share of Profits, Losses and Distributions, and the return of Capital Contribution, to which the transferor would otherwise be entitled with respect to the interest transferred, and shall not have the rights of a Member of the Company under the Act or this Agreement including' without limitation the right to obtain any information on account of the Company's transactions, to inspect the Company's books or to vote with the Members on, or to grant or withhold consents or approvals of, any matter. The Company shall however, if a transferee and transferor jointly advise the Company in writing, of a transfer of the Unit of Membership Interest, furnish the transferee with pertinent tax information the end of each Fiscal Year.

10.5 Death, Dissolution, Bankruptcy or Incompetence of a Member. Upon the death, dissolution, adjudication of bankruptcy or adjudication of incompetence of a Member, such Member's successors, executors, administrators or legal representatives shall have all the rights of a Member (except as provided by the last sentence of this Section 10.5) for the purpose of settling or managing such Member's estate, including such power as such Member possessed to substitute a successor as a transferee of such Member's interest in the Company and to join with such transferee in making the application to substitute such transferee as a Member. However, such successors, executors, administrators or legal representatives will not have the right to become a Substitute Member in the place of their predecessor in interest unless all of the other Members shall so consent as provided in Section 10.3(a) hereof.

10.6 Dispositions not in Compliance with this Article Void. Any attempted Disposition of a Unit of Membership Interest, or any part thereof, not in compliance with this Article shall be void ab initio and ineffectual and shall not bind the Company.

ARTICLE XI
DISSOCIATION OF A MEMBER

11.1 Dissociation. A Person shall cease to be a Member upon the happening of any of the following events:

a) the withdrawal, retirement or expulsion of a Member;

b) the bankruptcy of a Member;

(c) in the case of a Member who is a natural person, the death of the Member or the entry of an order by a court of competent jurisdiction adjudicating the Member incompetent to manage the Member's personal estate;

(d) In the case of a Member that is a trust or who is acting as a Member by virtue of being a trustee of a trust, the termination of the trust (but not merely the

substitution of a new trustee);

(e) In the case of a Member that is a separate Organization other than a corporation, the dissolution and commencement of winding up of the separate Organization;

(f) In the case of a Member that is a corporation, the filing of a certificate of dissolution, or its equivalent, for the corporation or the revocation of its charter; or

(g) In the case of a Member that is an estate, the distribution by the fiduciary of the estate's entire interest in the Company.

11.2 Rights of Dissociating Member. In the event any Member dissociates prior to the expiration of the term of this Agreement:

(a) If the Dissociation causes a dissolution arid winding up of the Company under Article XII, the Member shall be entitled to participate in the winding up of the Company to the same extent as any other Member except that, if such Dissociation results from a withdrawal of a Member in violation of this Agreement, any Distributions to which such Member would have been entitled shall be reduced by that portion of the damages, if any, sustained by the Company as a result of the Dissolution Event and winding up that is chargeable to the Capital Accounts of the other Members;

(b) If the Dissociation does not cause a dissolution and winding up. of the Company under Article XII, the Company shall pay to the Member, within six months of such Dissociation, an amount equal to the value of the Member's Membership Interest in the Company, to be paid over a period not to exceed five years together with interest at the minimum rate necessary to avoid the imputation of interest under the Code. The value of the Member's Membership Interest shall include the amount of any Distributions to which the Member is entitled under the Agreement and the fair market value of the Member's Membership Interest as of the date of Dissociation as determined by

reduced by any damages sustained by the Company as a result of the Member's Dissociation.

ARTICLE XII
DISSOLUTION AND WINDING UP

12.1 Dissolution. The Company shall be dissolved and its affairs wound up, upon the first to occur of any of the following events (each of which shall constitute a Dissolution

Event):

(a) the expiration of the term of the Agreement, unless the Company is continued with the consent of all of the Members;

(b) the unanimous written consent of all of the Members;

(c) the Dissociation of any Member, unless at the time of such Dissociation there are at least two remaining Members and the Company is continued with the consent of all of the remaining Members within 180 days after such Dissociation;

(d) when there is but one Member.

12.2 Effect of Dissolution. Upon dissolution, the Company shall not be terminated and shall continue until the winding up of the affairs of the Company is completed and a certificate of dissolution has been issued by the Secretary of State of New York.

12.3 Distribution of Assets on Dissolution. Upon the winding up of the Company, the Members acting together or such Person(s) designated by the Members representing at least a majority of the Members' Sharing Ratios) shall take full account of the assets and liabilities of the Company, shall liquidate the assets (unless the Members determine that a distribution of any Company Property in-kind would be more advantageous to the Members than the sale thereof) as promptly as is consistent with obtaining the fair value thereof, and shall apply and distribute the proceeds there from in the following order:

(a) first, to the payment of the debts and liabilities of the Company to creditors, including Members who are creditors, to the extent permitted by law, in satisfaction of such debts and liabilities, and to the payment of necessary expenses of liquidation;

(b) second, to the setting up of any reserves which the Members may deem necessary or appropriate for any anticipated obligations or contingencies of the Company arising out of or in connection with the operation or business of the Company. Such reserves may be paid over by the Members to an escrow agent or trustee selected by the Members to be disbursed by such escrow agent or trustee in payment of any of the aforementioned obligations or contingencies and, if any balance remains at the expiration of such period as the Members shall deem advisable, shall be distributed by such escrow agent or trustee in the manner hereinafter provided;

(c) then, to the Members in accordance with positive Capital Account balances taking into account all Capital Account adjustments for the Company's taxable year in which the liquidation occurs. Liquidation proceeds shall be paid within

60 days of the end of the Company's taxable year in which the liquidation occurs. Such distributions shall be in cash or Property (which need not be distributed proportionately) or partly in both, as determined by the Members.

If at the time of liquidation the Members shall determine that an immediate sale of some or all Company Property would cause undue loss to the Members, the Members may, in order to avoid such loss, defer liquidation.

12.4 Winding Up and Filing Articles of Dissolution. Upon the commencement of the winding up of the Company, articles of dissolution shall be delivered by the Company to the Secretary of State of New York for filing. The articles of dissolution shall set forth the information required by the Act. The winding up of the Company shall be completed when all debts, liabilities, and obligations of the Company have been paid and discharged or reasonably adequate provision therefore has been made, and all of the remaining Property of the Company has been distributed to the Members.

ARTICLE XIII
MISCELLANEOUS

13.1 Notices. Notices to the Company shall be sent to the Principal Office of the Company. Notices to the Members shall be sent to their addresses set forth on Schedule A. Any Member may require notices to be sent to a different address by giving notice to the other Members in accordance with this Section 13.1 Any Notice or other communication required or permitted hereunder shall be in writing, and shall be deemed to have been given with receipt confirmed if and when delivered personally, given by prepaid telegram or mailed first class, postage prepaid, delivered by courier, or sent by facsimile, to such Members at such address.

13.2 Headings. All Article and section headings in the Agreement are for convenience of reference only and are not intended to qualify the meaning of any Article or section.

13.3 Entire Agreement. This Agreement together with the schedules and appendices attached thereto constitutes the entire agreement between the parties and supersedes any prior agreement or understanding between them respecting the subject matter of this Agreement.

13.4 Binding Agreement. The Agreement shall be binding upon, and inure to the benefit of, the parties hereto, their successors, heirs, legatees, devisees, assigns, legal representatives, executors and administrators, except as otherwise provided herein.

13.5 Saving Clause. If any provision of this Agreement, or the application of such provision to any Person or circumstance, shall be held invalid, the remainder of this Agreement, or the application of such provision to Persons or circumstances other than those

as to which it is held invalid, shall not be affected thereby. If the operation of any provision of this Agreement would contravene the provisions of the Act, such provision shall be void and ineffectual.

13.6 Counterparts. The Agreement may be executed in several counterparts, and all so executed shall constitute one agreement, binding on all the parties hereto, even though all parties are not signatory to the original or the same counterpart. Any counterpart of either the Agreement shall for all purposes be deemed a fully executed instrument.

13.7 Governing Law. The Agreement shall be governed by and construed in accordance with the laws of the State of New York.

13.8 No Membership Intended for Nontax Purposes. The Members have formed the Company under the Act, and expressly do not intend hereby to form a partnership, either general or limited, under the NY State Partnership Law. The Members do not intend to be partners one to another, or partners as to any third party. To the extent any Member, by word or action, represents to another person that any Member is a partner or that the Company is a partnership, the Member making such wrongful representation shall be liable to any other Members who incur personal liability by reason of such wrongful representation.

13.9 No Rights of Creditors and Third Parties under Agreement. The Agreement is entered into among the Company and the Members for the exclusive benefit of the Company, its Members, and their successors and assignees. The Agreement is expressly not intended for the benefit of any creditor of the Company or any other Person. Except and only to the extent provided by applicable statute, no such creditor or any third party shall have any rights under the Agreement or any agreement between the Company and any Member with respect to any Capital Contribution or otherwise.

13.10 General Interpretive Principles. For purposes of this Agreement, except as otherwise expressly provided or unless the context otherwise requires:

(a) the terms defined in this Agreement include the plural as well as the singular, and the use of any gender herein shall be deemed to include the other gender;

(b) accounting terms not otherwise defined herein have the meanings given to them in the United States in accordance with generally accepted accounting principles;

(c) references herein to "Sections", "paragraphs", and other subdivisions without reference to a document are to designated Sections, paragraphs and other *sub*divisions of this Agreement;

(d) a reference to a paragraph without further reference to a Section is a reference to such paragraph as contained in the same Section in which the reference appears, and this rule shall also apply to other subdivisions;

(e) the words "herein", "hereof", "hereunder" and other words of similar import refer to this Agreement as a whole and not to any particular provision; and

(f) the term "include" or "including" shall mean without limitation by reason of enumeration.

IN WITNESS WHEREOF, the parties hereto have hereunto set their hands and seals as of the Effective Date.

Name Anna Dyrektor / Dyrektor Name Simon Field / Field

Name Kim Volman / KD Name _____

_____ L.L.C.

By: _____
Member

SCHEDULE A

Name and Address of Member	Description of Value of Initial Capital Contribution	No. of Units, Initial Membership Interest and Sharing Ratio
Anna Dykshteyn 2709 Coney Island Ave Brooklyn, NY 11235	Redacted Pursuant to N.Y. Public Officers Law, Art. 6	
Simon Field 2709 Coney Island Ave Brooklyn, NY 11235		
Kim Volman 2709 Coney Island Ave Brooklyn, NY 11235		

N. Y. S. DEPARTMENT OF STATE
DIVISION OF CORPORATIONS AND STATE RECORDS ALBANY, NY 12231-0001

FILING RECEIPT

ENTITY NAME: VG - CITIVA MEDICAL HOLDINGS, LLC

DOCUMENT TYPE: ARTICLES OF ORGANIZATION (DOM LLC) COUNTY: RICH

FILED:02/19/2015 DURATION:********* CASH#:150219000823 FILM #:150219000789
DOS ID:4713226

FILER:

NIXON PEABODY LLP
1300 CLINTON SQUARE

ROCHESTER, NY 14604

EXIST DATE
02/19/2015

ADDRESS FOR PROCESS:

THE LLC
1110 SOUTH AVENUE, SUITE 17
STATEN ISLAND, NY 10314

REGISTERED AGENT:

The limited liability company is required to file a Biennial Statement with the Department of State every two years pursuant to Limited Liability Company Law Section 301. Notification that the biennial statement is due will only be made via email. Please go to www.email.ebiennial.dos.ny.gov to provide an email address to receive an email notification when the Biennial Statement is due.

SERVICE COMPANY: LIBERTY CORPORATE SERVICES, INC. - AL SERVICE CODE: AL *

FEES	235.00
FILING	200.00
TAX	0.00
CERT	0.00
COPIES	10.00
HANDLING	25.00

PAYMENTS	235.00
CASH	0.00
CHECK	0.00
CHARGE	0.00
DRAWDOWN	235.00
OPAL	0.00
REFUND	0.00

57938

DOS-1025 (04/2007)

STATE OF NEW YORK

DEPARTMENT OF STATE

I hereby certify that the annexed copy has been compared with the original document in the custody of the Secretary of State and that the same is a true copy of said original.

WITNESS my hand and official seal of the Department of State, at the City of Albany, on February 20, 2015.

Anthony Giardina

Anthony Giardina
Executive Deputy Secretary of State

Rev. 06/13

ARTICLES OF ORGANIZATION

OF

VG – CITIVA MEDICAL HOLDINGS, LLC 150219000

Under Section 203 of the New York State Limited Liability Company Law 789

FIRST: The name of the limited liability company is VG – Citiva Medical Holdings, LLC (the "Company").

SECOND: The county within this state in which the office of the limited liability company is to be located is Richmond.

THIRD: The secretary of state is designated as agent of the company upon whom process against it may be served. The post office address within or without this state to which the secretary of state shall mail a copy of any process against the company served upon him or her is c/o the Company, 1110 South Avenue, Suite 17, Staten Island, NY 10314.

IN WITNESS WHEREOF, the undersigned has executed these Articles of Organization on the 19th day of February, 2015.

/s/ Alicia Rotella
Alicia Rotella Organizer

150219000789

789

ARTICLES OF ORGANIZATION
OF
VG – CITIVA MEDICAL HOLDINGS, LLC

Under Section 203 of the New York State Limited Liability Company Law

ICL

STATE OF NEW YORK
DEPARTMENT OF STATE
FILED FEB 19 2015
TAX $
BY:

LCS
DRAWDOWN - #AL

823

Filed by:

Nixon Peabody LLP
1300 Clinton Square
Rochester, NY 14604

(585) 263-1000

RECEIVED
2015 FEB 19 PM 2:03

Customer Ref.# 57938

2015 FEB 19 PM 2:54
FILED

4817-2781-4690.1

LIMITED LIABILITY COMPANY AGREEMENT
OF
VG – CITIVA MEDICAL HOLDINGS, LLC

A NEW YORK LIMITED LIABILITY COMPANY

The undersigned members (the "**Members**") hereby, and with the filing of a certificate of formation (the "**Certificate of Formation**") dated February 19, 2015, form a limited liability company pursuant to and in accordance with the New York Limited Liability Company Act, as amended from time to time, and hereby declare the following to be the Limited Liability Company Agreement of such limited liability company:

ARTICLE I.

ORGANIZATION & DEFINITIONS

Section 1.01 Name. The name of the limited liability company is **VG – Citiva Medical Holdings, LLC** (the "**Company**").

Section 1.02 Purposes. The purposes for which the Company has been formed are: (i) to acquire, hold, manage and sell assets an interest in Citiva Medical Holdings, LLC; (ii) to engage in any lawful act or activity for which limited liability companies may be formed under the L.L.C. Act; and (iii) to engage in any and all activities necessary or incidental to the foregoing.

Section 1.03 Registered Office. The registered office of the Company in the State of New York is Suite 14, 1110 South Ave., Staten Island, New York 10314. The mailing address of the Company is Suite 14, 1110 South Ave., Staten Island, New York 10314.

Section 1.04 Members. The names of the Initial Members are set forth on **Schedule A** attached hereto. A person or entity may be admitted as an additional Member upon such terms as approved by the Manager and the vote of the Members; it being agreed that the date of admission of any such additional Member shall be the first day of the Company's fiscal year, unless otherwise approved by the Manager and the vote of the Members.

Section 1.05 Capital Contribution. The Initial Members have contributed money or property to the Company ("**Capital Contribution**") in exchange for the number of Units set forth opposite such Member's name on **Schedule A** (the "**Membership Interest**"). The Initial Members are not required to make any contribution of property or money to the Company in excess of their respective Capital Contributions. Additional Members shall make the Capital Contribution required as a condition of their admittance as an additional Member according to the terms approved by the Manager and the vote of the Members.

Section 1.06 Unit. The interest of the Members shall be divided into Units, as set forth on Schedule A attached hereto. Additional Units may be issued from time to time according to the terms approved by the Manager and the vote of the Members.

Section 1.07 L.L.C. Act. The term "L.L.C. Act" shall mean the New York Limited Liability Company Act, as amended from time to time.

Section 1.08 Distribution. The term "Distribution" shall mean any transfer of money or other property to a Member, in his, her or its capacity as a Member, from the Company. For purposes of this Agreement, property is to be valued at its liquidation value on the date of transfer, without discount of any kind.

Section 1.09 Percentage Interest. The Percentage Interest (or Pro Rata) of each Member shall equal a fraction, the numerator of which shall be the number of Units held by that Member and the denominator of which shall be the total number of Units held by all Members.

ARTICLE II.

MANAGEMENT

Section 2.01 Powers of the Manager.

(a) Except for situations in which the approval of the Members is expressly required or permitted by this Limited Liability Company Agreement or by non-waivable provisions of applicable law, the management of the Company shall be vested in the Manager and the Manager shall have complete discretion, power and authority in the management and control of the business of the Company, shall make all decisions affecting the business of the Company and shall manage and control the affairs of the Company to carry out the business and purposes of the Company. Without limiting the generality of the foregoing, the Manager is hereby authorized:

(i) to expend Company funds in furtherance of the purposes of the Company;

(ii) to invest and reinvest in securities or other property of any character, real or personal, including, but not limited to, common and preferred stocks, bonds, notes, debentures, mortgages, leases and partnership interests (general or limited);

(iii) to sell, exchange or otherwise dispose of any such securities or other property at public or private sale and to grant options for the purchase, exchange or other disposition thereof, and to exercise or sell any options and any conversion, subscription, voting and other rights, discretionary or otherwise, in respect thereof;

(iv) to manage and keep in force such insurance as may be required to reasonably protect the Company and its assets;

(v) to borrow money for and on behalf of the Company and to incur and/or guarantee obligations for and on behalf of the Company, on such terms and at such rates of interest as the Manager may deem advisable and proper;

(vi) to pledge the credit of the Company and grant security interests in Company assets for Company purposes;

(vii) to employ such agents, employees, independent contractors, attorneys and accountants as the Manager deems reasonably necessary;

(viii) to commence, defend, compromise or settle any claims, proceedings, actions or litigation for and on behalf of the Company;

(ix) to execute, deliver and file any amendment, restatement or revocation of the Certificate of Formation as may be necessary or appropriate to reflect actions properly taken by the Manager and/or the Member under this Limited Liability Company Agreement;

(x) to prepare and file, on behalf of the Company, any required local, state and federal tax returns or other tax reports or documents relating to the Company, including IRS Form 8832 "Entity Classification Election" or similar state or federal form;

(xi) to execute, deliver, file and/or record any and all instruments, documents or agreements of any kind which the Manager may deem appropriate or as may be necessary or desirable to carry out the purposes of the Company; and

(xii) to take such other actions as the Manager may reasonably believe to be necessary or desirable to carry out the purposes of the Company.

(b) Notwithstanding paragraph (a) of this Section 2.01, the Manager shall not: (i) sell, exchange, lease, mortgage, pledge or otherwise transfer all or substantially all of the assets of the Company; (ii) merge or consolidate the Company with or into another limited liability company, partnership, corporation or other business entity; (iii) make or revoke the "Entity Classification Election" under the Internal Revenue Code of 1986, as amended, or any similar provision enacted in lieu thereof, or any corresponding provision of state tax laws or take any action that will cause the Entity Classification Election of the Company to be changed; (iv) admit any person or entity as a Member; or (v) issue additional Units; in each case without the approval of the Members.

(c) The Manager may not cause the Company to enter into contracts or other transactions with the Manager or any other corporation, partnership, limited liability company or other business entity in which the Manager is a manager, director or officer or has a substantial financial interest unless such contract or transaction has been approved by the Members.

Section 2.02 Duties of Manager. The Manager shall perform his duties as Manager in good faith and with that degree of care that an ordinarily prudent person in a like position would use under similar circumstances. In performing its duties, the Manager shall be entitled to rely on information, opinions, reports or statements, including financial statements and other financial data, in each case prepared or presented by (i) one or more agents or employees of the Company or the Manager; or (ii) counsel, public accountants or other persons as to matters that such Manager believes to be within such person's professional or expert competence. If the Manager performs the duties of Manager in accordance with this Section 2.02, then it shall have no liability by reason of being or having been the Manager of the Company.

Section 2.03 Limitation on Liability of Manager. Provided that it has acted in good faith, and not directly contrary to any express prohibitions contained in this Limited Liability

Company Agreement, the Manager shall not be liable to the Company or the Members for any mistakes in judgment or for any failure to perform any of its obligations hereunder, or for any loss due to such mistake or failure to perform, or due to the negligence, dishonesty, fraud or bad faith of any other person, including any other Member, employee, agent or independent contractor of the Company or the Manager or any other person with whom the Company or the Manager transacts business.

Section 2.04 Devotion of Time. The Manager shall not be required to devote any specified amount of time or efforts to the business and affairs of the Company. The Manager shall not have any obligation to loan money to the Company or to fund operating deficits. The Manager shall not be required to offer any investment opportunities to the Company, and the Manager may make investments or undertake activities that compete or conflict with the Company.

Section 2.05 Expenses. The Company shall pay directly, or shall reimburse the Manager for, all costs and expenses of the Company, including without limitation, all travel and other expenses incurred by the Manager in connection with Company business.

Section 2.06 Compensation. The Manager agrees to serve as the Manager without a fee for its time in managing the Company; however, the Manager shall be entitled to reimbursement for expenses incurred by the Manager on behalf of the Company as set forth in Section 2.05. The foregoing notwithstanding, the Manager shall receive a fee for his or her time in managing the Company if approved by a vote of the Members.

Section 2.07 Withdrawal and Term. The Manager may resign as Manager at any time upon notice to the Members. Subject to Section 2.09 hereof, the Manager shall serve for an unlimited term.

Section 2.08 Qualification; Initial Manager. The Initial Manager has been appointed by a majority of the Initial Members. Any replacement of the Initial Manager shall be determined by a vote of the Members. The Initial Manager shall be Michael Caridi.

Section 2.09 Removal of the Manager. The Manager's status as the Manager of the Company may not be terminated, nor may the Manager be removed as Manager, except as determined by a vote of the Members.

Section 2.10 Ceasing to be the Manager. In the event that the Manager ceases to be the Manager, by reason of Section 2.09 or otherwise, the Members shall, within 180 days after the Manager ceases to be the Manager of the Company, designate by vote a new person as a successor Manager (a "**Successor Manager**") to serve in the place of such Manager. Upon such designation, the Successor Manager shall assume in writing the designation, and thereby shall be entitled to the rights, of the Manager under this Agreement. Nothing contained in this Section 2.10 shall be construed as limiting any right or cause of action which the Company or the Members may have against the Manager for any breach of its duties hereunder.

Section 2.11 Management Rights of Members. By their execution of this Agreement, the Members consent to the exercise by the Manager of the powers conferred on it by this Limited Liability Company Agreement. Except as expressly provided herein, or as provided by nonwaivable provisions of applicable law, the Members shall not have any right to vote or to

take part in the management or control of the Company business or have any right or authority to act for or bind the Company.

With respect to any matter for which a vote or the approval of the Members is required or permitted to be taken pursuant to this Agreement, the decision of the Members shall be authorized by those Members collectively having a Percentage Interest equal to a majority of the Units issued at that time.

Section 2.12 Officers. The Company shall have those officers, with titles and duties, as determined by the Manager.

ARTICLE III.

TAXATION, ALLOCATIONS AND DISTRIBUTIONS

Section 3.01 Entity Classification Election. At formation, the Company has more than one member and shall be taxed as a partnership for both state and federal tax purposes.

Section 3.02 Allocation of Net Income or Loss.

(a) Except as otherwise provided in paragraphs (b), (c) and (d) of this Section 3.02, every item of income, gain, loss, deduction, credit or tax preference entering into the computation of net income or loss for any fiscal period shall be allocated, as appropriate, based upon the source of such item. Every item of income, gain, loss, deduction, credit or tax preference, shall be allocated among the Members in accordance with each Member's Percentage Interest in the Company (Member's Units divided by Total Outstanding Units).

(b) Upon the admission of a Member, the making of an additional capital contribution by a Member, an assignment of an interest in the Company during any fiscal period, or a partial or complete withdrawal by a Member, items of net income or loss for that fiscal period shall be allocated among the Members to reflect their varying interests during the fiscal period. For purposes of computing the varying interests of each Member, the Company shall make an interim closing of its books as of the effective date of the admission of a Member, the making of an additional capital contribution, the assignment of an interest in the Company, or a partial or complete withdrawal by a Member and compute the items of net income or loss applicable to the period of time before and after that date. To the extent interim information from pass through entities owned by the Company is not readily available, the Manager shall use reasonable means, including the use of a "per day" allocation, comparable to Section 1377(a)(1), to allocate income or loss.

(c) If any fees paid, or other payments made, to any Member are determined to be a distribution of profits of the Company for federal income tax purposes, gross income of the Company in an amount equal to the amount of the fee or other payment determined to be a distribution of profits shall be allocated to such Member. To the extent that any distribution to any Member is determined for federal income tax purposes to be a fee paid to that Member, that Member's allocated share of loss shall be increased, or its share of income reduced, by an amount equal to the amount of such distribution.

(d) The Members acknowledge that Section 704 of the Code may require that items of income, gain, loss and deduction of the Company be allocated among the Members to take

account of the difference between the Company's tax basis in its assets and the fair market value of Company assets at the time of receipt of contributions under Section 1.05 of this Agreement. To reflect any requirements of Section 704 of the Code, the Company may allocate net income or loss to the Members to the extent necessary to take into account the differences between the tax basis in Company assets and the fair market value of Company assets at the time of receipt of contributions. In addition, the Company shall also allocate Net Income or Loss to the Members to the extent necessary to take into account the differences between any post contribution differences between the Company's tax basis in Company assets and the fair market value of Company assets, so that both pre and post contribution differences between the Company's tax basis in Company assets and the fair market value of Company assets are allocated to the contributing Member.

Section 3.03 Distributions.

(a) Distributions on a Pro Rata basis shall be made only to the extent that the Company has cash and/or property that in the Manager's opinion are in excess of the assets needed for the continued operation and maintenance of the Company.

(b) The Manager shall make such Pro Rata Distributions as the Manager, in its sole discretion, deems appropriate. All Distributions shall be made to the Members in accordance with their respective Percentage Interests in the Company.

(c) The Manager shall use its best efforts to accommodate a full or partial distribution request by a Member pursuant to Section 5.01.

ARTICLE IV.

DISSOLUTION

Section 4.01 Dissolution. The Company shall dissolve, and its affairs shall be wound up, upon the earliest to occur of (i) the unanimous approval of the Members or (ii) an event of dissolution of the Company under the Act.

Section 4.02 Distributions upon Dissolution. Upon the occurrence of an event set forth in Section 4.01 hereof, the Members shall be entitled to receive, after paying or making reasonable provision for all of the Company's creditors to the extent required by the Act, the remaining funds of the Company on a Pro Rata basis.

ARTICLE V.

MISCELLANEOUS

Section 5.01 Withdrawal and Full or Partial Distribution. Upon written notice to the Manager, a Member may withdraw from the Company and request the Manager to make a distribution of such Member's Percentage Interest in the Company; provided that unless otherwise approved by a vote of the Members, such withdrawal shall be effective, and such distribution shall (subject to Section 3.03) be made only at the end of the month in which the request to withdraw was delivered to the Manager. Pursuant to Section 1.08, the amount of such full distribution shall not be reduced by discounts of any kind, and shall represent the amount

determined by multiplying the Percentage Interest by the fair market value of the Company's net assets. Upon written notice to the Manager, a Member may also request the Manager to make a distribution of a portion of such Member's respective Percentage Interest in the Company; provided that unless otherwise approved by a vote of the Members, such distribution shall (subject to Section 3.03) be made only at the end of the month in which the request to withdraw was delivered to the Manager. The amount of such partial distribution shall not be reduced by discounts of any kind, and shall represent the amount determined by multiplying the portion of the Percentage Interest requested to be distributed by the fair market value of the Company's net assets.

Section 5.02 Limited Liability. The Members shall not be obligated to make any contribution to the capital of the Company other than the Capital Contribution specified in Section 1.05 or as required to be made with respect to the admission of an additional Member pursuant to Section 1.04. A Member is not liable for any debts, obligations or liabilities of the Company, whether arising in tort, contract or otherwise, solely by reason of being a Member or acting (or omitting to act) in such capacity or participating in the conduct of the business of the Company.

Section 5.03 Indemnification. To the fullest extent permitted by applicable law, a Member, any affiliate of a Member, any officers, directors, shareholders, members, partners or employees of the affiliate of a Member, and any officer, employee or expressly authorized agent of the Company or its affiliates (collectively "**Covered Person**"), shall be entitled to indemnification from the Company for any loss, damage, claim or liability incurred by such Covered Person by reason of any act or omission performed, or omitted to be performed, or alleged to be performed or omitted to be performed, by such Covered Person in good faith on behalf of the Company and in a manner reasonably believed to be within the scope of authority conferred on such Covered Person by this Limited Liability Company Agreement, except that no Covered Person shall be entitled to be indemnified in respect of any loss, damage, claim or liability incurred by such Covered Person by reason of his gross negligence, actual fraud or willful misconduct with respect to such acts or omissions.

Section 5.04 Amendment. This Agreement may be amended only in a writing signed by each Member and the Manager or as necessary to effectuate the admission or withdrawal of a Member or the issuance of Units according to the terms of this Agreement.

Section 5.05 Governing Law. This Agreement shall be governed by and construed under the laws of the State of New York, excluding any conflicts of laws rule or principle that might refer the governance or construction of this Agreement to the law of another jurisdiction.

Section 5.06 Counterparts. This Agreement may be executed in counterparts with the same effect as if all parties had signed the same document.

[signature page follows]

IN WITNESS WHEREOF, the undersigned has caused this Limited Liability Company Agreement of **VG – CITIVA MEDICAL HOLDINGS LLC**, to be executed as of the 19th day of February, 2015.

MEMBERS:

Michael Caridi

Michael Caridi

VG CAPITAL GROUP LLC
By its Manager

VG Enterprises Management Group LLC

By: [redacted]

MANAGER:

[redacted]

120720000085

ACR-41

ARTICLES OF ORGANIZATION
OF
VG CAPITAL GROUP LLC

Under Section 203 of the Limited Liability Company Law
of the State of New York

15:8 IN 20 JUL 12

Drawdown

STATE OF NEW YORK
DEPARTMENT OF STATE
FILED JUL 20 2012
TAX $
BY:

109

Filed by:

Nixon Peabody LLP
1300 Clinton Square
Rochester, New York 14604

ES

14073454.1

N. Y. S. DEPARTMENT OF STATE
DIVISION OF CORPORATIONS AND STATE RECORDS ALBANY, NY 12231-0001

FILING RECEIPT

ENTITY NAME: VG CAPITAL GROUP LLC

DOCUMENT TYPE: ARTICLES OF ORGANIZATION (DOM LLC) COUNTY: MONR

FILED:07/20/2012 DURATION:********* CASH#:120720000109 FILM #:120720000085

FILER:

NIXON PEABODY LLP
1300 CLINTON SQUARE

ROCHESTER, NY 14604

EXIST DATE
07/20/2012

ADDRESS FOR PROCESS:

C/O NIXON PEABODY LLP
1300 CLINTON SQUARE
ROCHESTER, NY 14604

REGISTERED AGENT:

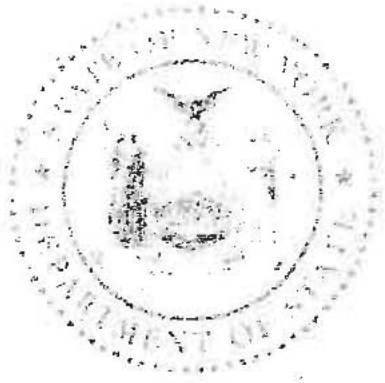

SERVICE COMPANY: ALBANY CORPORATE RESEARCH LTD. - 41 SERVICE CODE: 41 *

FEES	235.00
FILING	200.00
TAX	0.00
CERT	0.00
COPIES	10.00
HANDLING	25.00

PAYMENTS	235.00
CASH	0.00
CHECK	0.00
CHARGE	0.00
DRAWDOWN	235.00
OPAL	0.00
REFUND	0.00

DOS-1025 (04/2007)

120720 000085

ARTICLES OF ORGANIZATION
OF
VG CAPITAL GROUP LLC

Under Section 203 of the Limited Liability Company Law
of the State of New York

The undersigned person, acting as an organizer of the limited liability company being formed hereby, certifies that:

FIRST: The name of the limited liability company is VG Capital Group LLC

SECOND: The county within this state in which the office of the limited liability company is to be located is Monroe County.

THIRD: The Secretary of State is designated as agent of the limited liability company upon whom process against it may be served. The post office address within or without this state to which the Secretary of State shall mail a copy of any process against the limited liability company served upon him or her is c/o Nixon Peabody LLP, 1300 Clinton Square, Rochester, New York 14604.

FOURTH: The limited liability company shall be manager managed.

IN WITNESS WHEREOF, the undersigned has executed these Articles of Organization on the 19th day of July, 2012.

/s/ Dawn Traficanti
Dawn Traficanti, Organizer

120720000085

STATE OF NEW YORK

DEPARTMENT OF STATE

I hereby certify that the annexed copy has been compared with the original document in the custody of the Secretary of State and that the same is a true copy of said original.

WITNESS my hand and official seal of the Department of State, at the City of Albany, on July 25, 2012.

Daniel E. Shapiro
First Deputy Secretary of State

Rev. 05/09

LIMITED LIABILITY COMPANY AGREEMENT
OF
VG CAPITAL GROUP LLC

A NEW YORK LIMITED LIABILITY COMPANY

The undersigned members (the "**Members**") hereby, and with the filing of a certificate of formation (the "**Certificate of Formation**") dated July 20, 2012, form a limited liability company pursuant to and in accordance with the New York Limited Liability Company Act, as amended from time to time, and hereby declare the following to be the Limited Liability Company Agreement of such limited liability company:

ARTICLE I.

ORGANIZATION & DEFINITIONS

Section 1.01 Name. The name of the limited liability company is **VG Capital Group LLC** (the "**Company**").

Section 1.02 Purposes. The purposes for which the Company has been formed are: (i) to make investments, acquire, hold and sell assets of any kind including real estate, notes, mortgages, options, partnership interests (general or limited) and securities issued by individuals, corporations, partnerships, limited liability companies or other business entities, with a view to generating income and capital appreciation for the Members, and, in furtherance of such purposes, to receive, hold, sell or otherwise dispose of any securities or other property distributed by such entities to the Company and to invest in short-term liquid investments pending the investment or distribution of Company funds; (ii) to facilitate the transfer of investment assets among Members; (iii) to engage in any lawful act or activity for which limited liability companies may be formed under the L.L.C. Act; and (iv) to engage in any and all activities necessary or incidental to the foregoing.

Section 1.03 Registered Office. The registered office of the Company in the State of New York is Suite 14, 1110 South Ave., Staten Island, New York 10314. The mailing address of the Company is Suite 14, 1110 South Ave., Staten Island, New York 10314.

Section 1.04 Members. The names of the Initial Members are set forth on **Schedule A** attached hereto. A person or entity may be admitted as an additional Member upon such terms as approved by the Manager and the vote of the Members; it being agreed that the date of admission of any such additional Member shall be the first day of the Company's fiscal year, unless otherwise approved by the Manager and the vote of the Members.

Section 1.05 Capital Contribution. The Initial Members have contributed money or property to the Company ("**Capital Contribution**") in exchange for the number of Units set forth opposite such Member's name on **Schedule A** (the "**Membership Interest**"). The Initial Members are not required to make any contribution of property or money to the Company in excess of their respective Capital Contributions. Additional Members shall make the Capital Contribution required as a condition of their admittance as an additional Member according to the terms approved by the Manager and the vote of the Members.

Section 1.06 Unit. The interest of the Members shall be divided into Units, as set forth on Schedule A attached hereto. Additional Units may be issued from time to time according to the terms approved by the Manager and the vote of the Members.

Section 1.07 L.L.C. Act. The term "L.L.C. Act" shall mean the New York Limited Liability Company Act, as amended from time to time.

Section 1.08 Distribution. The term "Distribution" shall mean any transfer of money or other property to a Member, in his, her or its capacity as a Member, from the Company. For purposes of this Agreement, property is to be valued at its liquidation value on the date of transfer, without discount of any kind.

Section 1.09 Percentage Interest. The Percentage Interest (or Pro Rata) of each Member shall equal a fraction, the numerator of which shall be the number of Units held by that Member and the denominator of which shall be the total number of Units held by all Members.

ARTICLE II.

MANAGEMENT

Section 2.01 Powers of the Manager.

(a) Except for situations in which the approval of the Members is expressly required or permitted by this Limited Liability Company Agreement or by non-waivable provisions of applicable law, the management of the Company shall be vested in the Manager and the Manager shall have complete discretion, power and authority in the management and control of the business of the Company, shall make all decisions affecting the business of the Company and shall manage and control the affairs of the Company to carry out the business and purposes of the Company. Without limiting the generality of the foregoing, the Manager is hereby authorized:

(i) to expend Company funds in furtherance of the purposes of the Company;

(ii) to invest and reinvest in securities or other property of any character, real or personal, including, but not limited to, common and preferred stocks, bonds, notes, debentures, mortgages, leases and partnership interests (general or limited);

(iii) to sell, exchange or otherwise dispose of any such securities or other property at public or private sale and to grant options for the purchase, exchange or other disposition thereof, and to exercise or sell any options and any conversion, subscription, voting and other rights, discretionary or otherwise, in respect thereof;

(iv) to manage and keep in force such insurance as may be required to reasonably protect the Company and its assets;

(v) to borrow money for and on behalf of the Company and to incur and/or guarantee obligations for and on behalf of the Company, on such terms and at such rates of interest as the Manager may deem advisable and proper;

(vi) to pledge the credit of the Company and grant security interests in Company assets for Company purposes;

(vii) to employ such agents, employees, independent contractors, attorneys and accountants as the Manager deems reasonably necessary;

(viii) to commence, defend, compromise or settle any claims, proceedings, actions or litigation for and on behalf of the Company;

(ix) to execute, deliver and file any amendment, restatement or revocation of the Certificate of Formation as may be necessary or appropriate to reflect actions properly taken by the Manager and/or the Member under this Limited Liability Company Agreement;

(x) to prepare and file, on behalf of the Company, any required local, state and federal tax returns or other tax reports or documents relating to the Company, including IRS Form 8832 "Entity Classification Election" or similar state or federal form;

(xi) to execute, deliver, file and/or record any and all instruments, documents or agreements of any kind which the Manager may deem appropriate or as may be necessary or desirable to carry out the purposes of the Company; and

(xii) to take such other actions as the Manager may reasonably believe to be necessary or desirable to carry out the purposes of the Company.

(b) Notwithstanding paragraph (a) of this Section 2.01, the Manager shall not: (i) sell, exchange, lease, mortgage, pledge or otherwise transfer all or substantially all of the assets of the Company; (ii) merge or consolidate the Company with or into another limited liability company, partnership, corporation or other business entity; (iii) make or revoke the "Entity Classification Election" under the Internal Revenue Code of 1986, as amended, or any similar provision enacted in lieu thereof, or any corresponding provision of state tax laws or take any action that will cause the Entity Classification Election of the Company to be changed; (iv) admit any person or entity as a Member; or (v) issue additional Units; in each case without the approval of the Members.

(c) The Manager may not cause the Company to enter into contracts or other transactions with the Manager or any other corporation, partnership, limited liability company or other business entity in which the Manager is a manager, director or officer or has a substantial financial interest unless such contract or transaction has been approved by the Members.

Section 2.02 Duties of Manager. The Manager shall perform its duties as Manager in good faith and with that degree of care that an ordinarily prudent person in a like position would use under similar circumstances. In performing its duties, the Manager shall be entitled to rely on information, opinions, reports or statements, including financial statements and other financial data, in each case prepared or presented by (i) one or more agents or employees of the Company or the Manager; or (ii) counsel, public accountants or other persons as to matters that such Manager believes to be within such person's professional or expert competence. If the Manager performs the duties of Manager in accordance with this Section 2.02, then it shall have no liability by reason of being or having been the Manager of the Company.

Section 2.03 Limitation on Liability of Manager. Provided that it has acted in good faith, and not directly contrary to any express prohibitions contained in this Limited Liability Company Agreement, the Manager shall not be liable to the Company or the Members for any mistakes in judgment or for any failure to perform any of its obligations hereunder, or for any loss due to such mistake or failure to perform, or due to the negligence, dishonesty, fraud or bad faith of any other person, including any other Member, employee, agent or independent contractor of the Company or the Manager or any other person with whom the Company or the Manager transacts business.

Section 2.04 Devotion of Time. The Manager shall not be required to devote any specified amount of time or efforts to the business and affairs of the Company. The Manager shall not have any obligation to loan money to the Company or to fund operating deficits. The Manager shall not be required to offer any investment opportunities to the Company, and the Manager may make investments or undertake activities that compete or conflict with the Company.

Section 2.05 Expenses. The Company shall pay directly, or shall reimburse the Manager for, all costs and expenses of the Company, including without limitation, all travel and other expenses incurred by the Manager in connection with Company business.

Section 2.06 Compensation. The Manager agrees to serve as the Manager without a fee for its time in managing the Company; however, the Manager shall be entitled to reimbursement for expenses incurred by the Manager on behalf of the Company as set forth in Section 2.05. The foregoing notwithstanding, the Manager shall receive a fee for his or her time in managing the Company if approved by a vote of the Members.

Section 2.07 Withdrawal and Term. The Manager may resign as Manager at any time upon notice to the Members. Subject to Section 2.09 hereof, the Manager shall serve for an unlimited term.

Section 2.08 Qualification; Initial Manager. The Initial Manager has been appointed by a majority of the Initial Members. Any replacement of the Initial Manager shall be determined by a vote of the Members. The Initial Manager shall be VG Enterprises Management Group LLC.

Section 2.09 Removal of the Manager. The Manager's status as the Manager of the Company may not be terminated, nor may the Manager be removed as Manager, except as determined by a vote of the Members.

Section 2.10 Ceasing to be the Manager. In the event that the Manager ceases to be the Manager, by reason of Section 2.09 or otherwise, the Members shall, within 180 days after the Manager ceases to be the Manager of the Company, designate by vote a new person as a successor Manager (a "**Successor Manager**") to serve in the place of such Manager. Upon such designation, the Successor Manager shall assume in writing the designation, and thereby shall be entitled to the rights, of the Manager under this Agreement. Nothing contained in this Section 2.10 shall be construed as limiting any right or cause of action which the Company or the Members may have against the Manager for any breach of its duties hereunder.

Section 2.11 Management Rights of Members. By their execution of this Agreement, the Members consent to the exercise by the Manager of the powers conferred on it by this

Limited Liability Company Agreement. Except as expressly provided herein, or as provided by nonwaivable provisions of applicable law, the Members shall not have any right to vote or to take part in the management or control of the Company business or have any right or authority to act for or bind the Company.

With respect to any matter for which a vote or the approval of the Members is required or permitted to be taken pursuant to this Agreement, the decision of the Members shall be authorized by those Members collectively having a Percentage Interest equal to a majority of the Units issued at that time.

Section 2.12 Officers. The Company shall have those officers, with titles and duties, as determined by the Manager.

ARTICLE III.

TAXATION, ALLOCATIONS AND DISTRIBUTIONS

Section 3.01 Entity Classification Election. At formation, the Company has more than one member and shall be taxed as a partnership for both state and federal tax purposes.

Section 3.02 Allocation of Net Income or Loss.

(a) Except as otherwise provided in paragraphs (b), (c) and (d) of this Section 3.02, every item of income, gain, loss, deduction, credit or tax preference entering into the computation of net income or loss for any fiscal period shall be allocated, as appropriate, based upon the source of such item. Every item of income, gain, loss, deduction, credit or tax preference, shall be allocated among the Members in accordance with each Member's Percentage Interest in the Company (Member's Units divided by Total Outstanding Units).

(b) Upon the admission of a Member, the making of an additional capital contribution by a Member, an assignment of an interest in the Company during any fiscal period, or a partial or complete withdrawal by a Member, items of net income or loss for that fiscal period shall be allocated among the Members to reflect their varying interests during the fiscal period. For purposes of computing the varying interests of each Member, the Company shall make an interim closing of its books as of the effective date of the admission of a Member, the making of an additional capital contribution, the assignment of an interest in the Company, or a partial or complete withdrawal by a Member and compute the items of net income or loss applicable to the period of time before and after that date. To the extent interim information from pass through entities owned by the Company is not readily available, the Manager shall use reasonable means, including the use of a "per day" allocation, comparable to Section 1377(a)(1), to allocate income or loss.

(c) If any fees paid, or other payments made, to any Member are determined to be a distribution of profits of the Company for federal income tax purposes, gross income of the Company in an amount equal to the amount of the fee or other payment determined to be a distribution of profits shall be allocated to such Member. To the extent that any distribution to any Member is determined for federal income tax purposes to be a fee paid to that Member, that Member's allocated share of loss shall be increased, or its share of income reduced, by an amount equal to the amount of such distribution.

(d) The Members acknowledge that Section 704 of the Code may require that items of income, gain, loss and deduction of the Company be allocated among the Members to take account of the difference between the Company's tax basis in its assets and the fair market value of Company assets at the time of receipt of contributions under Section 1.05 of this Agreement. To reflect any requirements of Section 704 of the Code, the Company may allocate net income or loss to the Members to the extent necessary to take into account the differences between the tax basis in Company assets and the fair market value of Company assets at the time of receipt of contributions. In addition, the Company shall also allocate Net Income or Loss to the Members to the extent necessary to take into account the differences between any post contribution differences between the Company's tax basis in Company assets and the fair market value of Company assets, so that both pre and post contribution differences between the Company's tax basis in Company assets and the fair market value of Company assets are allocated to the contributing Member.

Section 3.03 Distributions.

(a) Distributions on a Pro Rata basis shall be made only to the extent that the Company has cash and/or property that in the Manager's opinion are in excess of the assets needed for the continued operation and maintenance of the Company.

(b) The Manager shall make such Pro Rata Distributions as the Manager, in its sole discretion, deems appropriate. All Distributions shall be made to the Members in accordance with their respective Percentage Interests in the Company.

(c) The Manager shall use its best efforts to accommodate a full or partial distribution request by a Member pursuant to Section 5.01.

ARTICLE IV.

DISSOLUTION

Section 4.01 Dissolution. The Company shall dissolve, and its affairs shall be wound up, upon the earliest to occur of (i) the unanimous approval of the Members or (ii) an event of dissolution of the Company under the Act.

Section 4.02 Distributions upon Dissolution. Upon the occurrence of an event set forth in Section 4.01 hereof, the Members shall be entitled to receive, after paying or making reasonable provision for all of the Company's creditors to the extent required by the Act, the remaining funds of the Company on a Pro Rata basis.

ARTICLE V.

MISCELLANEOUS

Section 5.01 Withdrawal and Full or Partial Distribution. Upon written notice to the Manager, a Member may withdraw from the Company and request the Manager to make a distribution of such Member's Percentage Interest in the Company; provided that unless otherwise approved by a vote of the Members, such withdrawal shall be effective, and such distribution shall (subject to Section 3.03) be made only at the end of the month in which the

request to withdraw was delivered to the Manager. Pursuant to Section 1.08, the amount of such full distribution shall not be reduced by discounts of any kind, and shall represent the amount determined by multiplying the Percentage Interest by the fair market value of the Company's net assets. Upon written notice to the Manager, a Member may also request the Manager to make a distribution of a portion of such Member's respective Percentage Interest in the Company; provided that unless otherwise approved by a vote of the Members, such distribution shall (subject to Section 3.03) be made only at the end of the month in which the request to withdraw was delivered to the Manager. The amount of such partial distribution shall not be reduced by discounts of any kind, and shall represent the amount determined by multiplying the portion of the Percentage Interest requested to be distributed by the fair market value of the Company's net assets.

Section 5.02 Limited Liability. The Members shall not be obligated to make any contribution to the capital of the Company other than the Capital Contribution specified in Section 1.05 or as required to be made with respect to the admission of an additional Member pursuant to Section 1.04. A Member is not liable for any debts, obligations or liabilities of the Company, whether arising in tort, contract or otherwise, solely by reason of being a Member or acting (or omitting to act) in such capacity or participating in the conduct of the business of the Company.

Section 5.03 Indemnification. To the fullest extent permitted by applicable law, a Member, any affiliate of a Member, any officers, directors, shareholders, members, partners or employees of the affiliate of a Member, and any officer, employee or expressly authorized agent of the Company or its affiliates (collectively "**Covered Person**"), shall be entitled to indemnification from the Company for any loss, damage, claim or liability incurred by such Covered Person by reason of any act or omission performed, or omitted to be performed, or alleged to be performed or omitted to be performed, by such Covered Person in good faith on behalf of the Company and in a manner reasonably believed to be within the scope of authority conferred on such Covered Person by this Limited Liability Company Agreement, except that no Covered Person shall be entitled to be indemnified in respect of any loss, damage, claim or liability incurred by such Covered Person by reason of his gross negligence, actual fraud or willful misconduct with respect to such acts or omissions.

Section 5.04 Amendment. This Agreement may be amended only in a writing signed by each Member and the Manager or as necessary to effectuate the admission or withdrawal of a Member or the issuance of Units according to the terms of this Agreement.

Section 5.05 Governing Law. This Agreement shall be governed by and construed under the laws of the State of New York, excluding any conflicts of laws rule or principle that might refer the governance or construction of this Agreement to the law of another jurisdiction.

Section 5.06 Counterparts. This Agreement may be executed in counterparts with the same effect as if all parties had signed the same document.

[signature page follows]

IN WITNESS WHEREOF, the undersigned has caused this Limited Liability Company Agreement of **VG CAPITAL GROUP LLC**, to be executed as of the 20th day of July, 2012.

JOANNE CARIDI 2007 TRUST
DTD 10/23/2007

By: _____
Thomas M. Farace, Successor Trustee

LISA SALVO 2007 TRUST
DTD 10/23/2007

By: _____
Thomas M. Farace, Successor Trustee

DIANA BOLAND 2007 TRUST
DTD 10/23/2007

By: _____
Thomas M. Farace, Successor Trustee

JOANNE CARIDI GST TAXABLE TRUST
DTD 11/11/1994

By: Joanne Caridi
Joanne Caridi, Successor Trustee

By: Lisa Salvo
Lisa Salvo, Successor Trustee

By: Diane Boland
Diana Boland, Successor Trustee

JOANNE CARIDI GST EXEMPT TRUST
DTD 11/11/1994

By: Joanne Caridi
Joanne Caridi, Successor Trustee

By: Lisa Salvo
Lisa Salvo, Successor Trustee

By: Diana Boland
Diana Boland, Successor Trustee

LISA SALVO (FORMERLY KNOWN AS LISA GRUPPUSO) GST TAXABLE TRUST
DTD 11/11/1994

By: Joanne Caridi
Joanne Caridi, Successor Trustee

By: Lisa Salvo
Lisa Salvo, Successor Trustee

By: Diana Boland
Diana Boland, Successor Trustee

LISA SALVO (FORMERLY KNOWN AS LISA GRUPPUSO) GST EXEMPT TRUST
DTD 11/11/1994

By: Joanne Caridi
Joanne Caridi, Successor Trustee

By: Lisa Salvo
Lisa Salvo, Successor Trustee

By: Diana Boland
Diana Boland, Successor Trustee

DIANA BOLAND (FORMERLY KNOWN AS DIANA GRUPPUSO) GST TAXABLE TRUST

DTD 11/11/1994

By: Joanne Caridi
Joanne Caridi, Successor Trustee

By: Lisa Salvo
Lisa Salvo, Successor Trustee

By: Diana Boland
Diana Boland, Successor Trustee

DIANA BOLAND (FORMERLY KNOWN AS DIANA GRUPPUSO) GST EXEMPT TRUST
DTD 11/11/1994

By: Joanne Caridi
Joanne Caridi, Successor Trustee

By: Lisa Salvo
Lisa Salvo, Successor Trustee

By: Diana Boland
Diana Boland, Successor Trustee

DIANA BOLAND (FORMERLY KNOWN AS DIANA GRUPPUSO) 1999 TRUST
DTD 10/5/1999

By: Diana Boland
Diana Boland, Successor Co-Trustee

By: Lisa Salvo
Lisa Salvo, Successor Co-Trustee

By: Joanne Caridi
Joanne Caridi, Successor Co-Trustee

JOANNE CARIDI 1999 TRUST
DTD 10/5/1999

By: Diana Boland
Diana Boland, Successor Co-Trustee

By: Lisa Salvo
Lisa Salvo, Successor Co-Trustee

By: Joanne Caridi
Joanne Caridi, Successor Co-Trustee

LISA SALVO 1999 TRUST
DTD 10/5/1999

By: Diana Boland
Diana Boland, Successor Co-Trustee

By: Lisa Salvo
Lisa Salvo, Successor Co-Trustee

By: Joanne Caridi
Joanne Caridi, Successor Co-Trustee

DIANA BOLAND TR UNDER ART SEVENTH
OF THE WILL OF VINCENT GRUPPUSO

By: Diana Boland
Diana Boland, Co-Trustee

By: Lisa Salvo
Lisa Salvo, Co-Trustee

By: Joanne Caridi
Joanne Caridi, Co-Trustee

LISA SALVO TR UNDER ART SEVENTH
OF THE WILL OF VINCENT GRUPPUSO

By: Diana Boland
Diana Boland, Co-Trustee

By: Lisa Salvo
Lisa Salvo, Co-Trustee

By: Joanne Caridi
Joanne Caridi, Co-Trustee

JOANNE CARIDI TR UNDER ART SEVENTH
OF THE WILL OF VINCENT GRUPPUSO

By: Diana Boland
Diana Boland, Co-Trustee

By: Lisa Salvo
Lisa Salvo, Co-Trustee

By: Joanne Caridi
Joanne Caridi, Co-Trustee

TAYLOR PAIGE CARIDI TR UNDER ART SIXTH
OF THE WILL OF VINCENT GRUPPUSO

By: Diana Boland
Diana Boland, Co-Trustee

By: Lisa Salvo
Lisa Salvo, Co-Trustee

By: Joanne Caridi
Joanne Caridi, Co-Trustee

BRANDON REESE CARIDI TR UNDER ART SIXTH
OF THE WILL OF VINCENT GRUPPUSO

By: Diana Boland

Diana Boland, Co-Trustee

By: Lisa Salvo
Lisa Salvo, Co-Trustee

By: Joanne Caridi
Joanne Caridi, Co-Trustee

JONATHAN MICHAEL SALVO TR UNDER ART SIXTH OF THE WILL OF VINCENT GRUPPUSO

By: Diana Boland
Diana Boland, Co-Trustee

By: Lisa Salvo
Lisa Salvo, Co-Trustee

By: Joanne Caridi
Joanne Caridi, Co-Trustee

SABRINA MARIE SALVO TR UNDER ART SIXTH OF THE WILL OF VINCENT GRUPPUSO

By: Diana Boland
Diana Boland, Co-Trustee

By: Lisa Salvo
Lisa Salvo, Co-Trustee

By: Joanne Caridi
Joanne Caridi, Co-Trustee

JULIA GRACE BOLAND TR UNDER ART SIXTH OF THE WILL OF VINCENT GRUPPUSO

By: Diana Boland
Diana Boland, Co-Trustee

By: Lisa Salvo
Lisa Salvo, Co-Trustee

By: Joanne Caridi
Joanne Caridi, Co-Trustee

Manager:

VG Enterprises Management Group LLC

By: [redacted]

July 20, 2012

VG CAPITAL GROUP LLC (Funded July __ 2012)

Schedule A

Initial Members & Initial Capital Contributions

(Initial Contributions)

Member	Capital Contribution	Percentage Ownership	Units
Joanne Caridi 2007 Trust dtd 10/23/2007			
Lisa Salvo 2007 Trust dtd 10/23/2007			
Diana Boland 2007 Trust dtd 10/23/2007			
Joanne Caridi GST Taxable Trust dtd 11/11/1994			
Joanne Caridi GST Exempt Trust dtd 11/11/1994			
Lisa Salvo (formerly known as Lisa Gruppuso) GST Taxable Trust dtd 11/11/1994			
Lisa Salvo (formerly known as Lisa Gruppuso) GST Exempt Trust dtd 11/11/1994			
Diana Boland (formerly known as Diana Gruppuso) GST Taxable Trust dtd 11/11/1994			
Diana Boland (formerly known as Diana Gruppuso) GST Exempt Trust dtd 11/11/1994			
Diana Boland (formerly known as Diana Gruppuso) 1999 Trust dtd 10/5/1999			

Joanne Caridi 1999 Trust
dtd 10/5/1999

Lisa Salvo 1999 Trust
dtd 10/5/1999

Diana Boland Tr under Art Seventh of the Will of Vincent Gruppuso

Lisa Salvo Tr under Art Seventh of the Will of Vincent Gruppuso

Joanne Caridi Tr under Art Seventh of the Will of Vincent Gruppuso

Taylor Paige Caridi Tr under Art Sixth of the Will of Vincent Gruppuso

Brandon Reese Caridi Tr under Art Sixth of the Will of Vincent Gruppuso

Jonathan Michael Salvo Tr under Art Sixth of the Will of Vincent Gruppuso

Sabrina Marie Salvo Tr under Art Sixth of the Will of Vincent Gruppuso

Julia Grace Boland Tr under Art Sixth of the Will of Vincent Gruppuso

TOTALS [redacted]

CITIVA MEDICAL LLC

MEDICAL MARIHUANA PROGRAM

ATTACHMENT F

LABOR PEACE AGREEMENT

Citiva Medical LLC has executed a Labor Peace/Neutrality Agreement with Local 338, RWDSU/URCW (Local 338) as part of the requirement of this Application. Please find enclosed a Cover Letter and Labor Peace/Neutrality Agreement from Local 338.

Local 338 RWDSU/UFCW

JOHN R. DURSO
President

JOSEPH FONTANO
Secretary-Treasurer

JACK CAFFEY JR.
Executive Vice President

DEBRA BOLLBACH
Recorder

Howard Zucker
Commissioner
New York State Department of Health
Corning Tower
Empire State Plaza
Albany, New York 12237

May 26, 2015

Re: Labor Peace Agreement between Local 338, RWDSU/UFCW and CITIVA Medical, LLC

Dear Commissioner Zucker,

Local 338, RWDSU/UFCW ("Local 338") is a labor organization, as defined in 29 U.S.C. § 402(i) and 29 U.S.C. § 152(5), representing close to 20,000 employees in New York State and its environs.

The enclosed document entitled, Neutrality Agreement, is intended in part to satisfy and comply with the requirement, under the New York Public Health Law, that an applicant (CITIVA Medical, LLC) seeking a license to conduct business relating to the use of medical marijuana in New York State submit proof that it has entered into a labor peace agreement with a bona-fide labor organization that is actively engaged in representing or attempting to represent the applicant's employees. See Public Health Law §§ 3360(14), 3365(1)(III), 3365(3)(VII), 3365(6)(IV), and 3365(7).

The Neutrality Agreement contains explicit language which protects the State's proprietary interests by prohibiting Local 338 from engaging in picketing, work stoppages, boycotts, and any other economic interference with the business of an entity licensed to engage in the business relating to the use of medical marijuana in New York State.

Should any changes in the Neutrality Agreement be necessary for an applicant to comply with the Public Health Law, please feel free to communicate with us directly.

Thank you for your consideration.

Sincerely,

Joseph Fontano
Secretary-Treasurer

LABOR PEACE / NEUTRALITY AGREEMENT
BY AND BETWEEN
CITIVA Medical, LLC
AND
LOCAL 338, RWDSU/UFCW

By this Agreement dated May 22, 2015, CITIVA Medical, LLC (the "Employer") and Local 338, RWDSU/UFCW, 1505 Kellum Place, Mineola, New York (the "Union") hereby establish the following procedure to address the Union's efforts to organize employees in any existing or new facility owned or operated by the Employer in which the employees are not represented by a labor organization:

1. The term, "employees," used herein shall include all full time and part-time employees, including, but not limited to, pharmacists, pharmacy technicians, dispensaries, consultants, drivers, growers, retail, manufacturers, trimmers, and anyone else performing work for or on behalf of the Employer, and shall exclude only who are statutorily excluded by the National Labor Relations Act ("NLRA").

2. Within ten (10) days after receiving written notice of the Union's intent, the Employer agrees to furnish the Union with a complete list of employees in the shop designated in the notice, including job classifications, departments, street addresses, telephone numbers and e-mail addresses. The Employer agrees to thereafter provide updated lists as reasonably requested. The Employer waives the right under the NLRA to file any petition with the National Labor Relations Board for any election in connection with the invocation of this Agreement and agrees to refrain from directly or indirectly supporting any such petition.

3. The Employer agrees to take a neutral approach to unionization of employees. Neutrality means that the Employer will neither help nor hinder the Union's organizing effort by, for example, directly or indirectly demeaning by word or deed the Union or its representatives, or directly or indirectly supporting or assisting in any way any person or group who may oppose the Union. The Employer agrees not to communicate to any employee that it disfavors the Union or the signing of authorization cards, or that they may suffer adverse consequences for supporting the Union or signing cards. The Employer also agrees that it, and its managers, supervisors and other representatives will refer to the Union by name and not as "third party," "outsider" or in similar manner. The parties will conduct themselves with mutual respect for each other during any organizing effort.

4. During organizing efforts, the Employer's managers, supervisors and other representatives will remain neutral and will refrain from communicating with employees about how they should respond to the Union. The Employer agrees to inform all of its managers, supervisors and representatives of this obligation and that the Employer has no objection to employees supporting the Union or engaging in union activities, including meeting with Union representatives or signing authorization cards. The Employer will promptly terminate any violation of this provision and immediately act to discourage any additional violation, including disciplining any manager' or supervisor - or terminating its relationship with any independent contractor representative - who violates it. The Employer agrees to take prompt action to

mitigate the effects of any violation, including informing employees of the Employer's position on organizing and the rights of employees to organize.

5. The Employer agrees to permit Union representatives access to the workplace to communicate with employees, including through the distribution of materials. Union representatives will not disrupt the Employer's operations or unreasonably interfere with employee production.

6. The facility's highest level manager will meet with and tell employees that the Employer has no objection to employees meeting with Union representatives, supporting the Union or signing authorization cards. That manager will also tell employees that the Employer is neutral in their selection of union representation.

7. If the Union provides evidence in support of its claim that a majority of employees have designated the Union as their collective bargaining representative, the Employer will recognize the Union as such representative of the employees in the bargaining unit described in the Union's notice invoking this provision and will extend this Agreement to them.

8. If both the Union and the Employer mutually agree that additional Agreement provisions are necessary for the new unit or if the National Labor Relations Board or a court determines that the parties may not lawfully extend this Agreement to the unit, the parties agree to bargain in good faith over a collective bargaining agreement to cover the employees. The parties agree to commence bargaining within 20 business days from the date the neutral verifies the Union's majority. If they are unable to agree to a collective bargaining agreement, the parties agree to submit all open provisions and issues to final and binding interest arbitration. If they are unable to select an arbitrator, the parties shall select an arbitrator to set the open provisions and resolve any other issues in accordance with the procedures of this Agreement's arbitration provision.

9. The parties agree to resolve any dispute over the interpretation of this provision through expedited arbitration. The parties will invoke expedited arbitration by requesting an arbitrators list from the American Arbitration Association. Within 10 days of receiving AAA's arbitrators' list, the parties will submit their struck lists to the AAA. The parties agree that AAA will follow its labor arbitration rules to select an arbitrator based on the list or lists the parties submit. The AAA will strictly apply its rule requiring struck lists to be timely submitted in accordance with this provision. The arbitrator will hear the dispute on either the first or second date the arbitrator is available and issue an award within 20 days thereafter. The parties will equally share the arbitrator's fees and costs.

10. The parties agree that the arbitrator has the authority to direct the breaching party to specifically perform its obligations under this provision. The arbitrator may award a penalty of up to $10,000 for willful breaches. A willful breach is one that clearly violated this provision and was not corrected after the aggrieved party provided notice of it to the violating party. The parties consent to the entry of the arbitrator's award as the order of judgment of a United States District Court, without notice.

11. The Union and the Employer recognize that this Agreement is in their mutual best interests and therefore agree to prevent evasion of the terms of this Agreement through the use of contractors and/or subcontractors. To comply with the spirit of this Agreement, the Employer shall, as a condition of its relationship with any contractor and/or subcontractor require that: (a) the contractor and/or subcontractor enter into a neutrality agreement with the Union; and (b) immediately notify the Union when seeking to form a business relationship with the contractor and/or subcontractor.

12. Labor Peace Agreement: In the event that the Union attempts to organize the Employer's employees or actually represents the Employer's employees at any particular location, then the Union hereby promises that it will not at any time covered by this agreement engage in any picketing, work stoppages, boycotts or any other economic interference with the Employer's business at that location, provided the employer has not violated any of the terms of this agreement.

IN WITNESS WHEREOF, the parties have caused this Agreement to be executed this 22nd day of May 2015, by their duly authorized representatives.

LOCAL 338, RWSDU/UFCW

By: _____

Date: 5/28/15

Name: Joseph Fontano

Title: Secretary Treasurer

Witness: Nikki Katerman

CITIVA Medical, LLC

By: _____

Date: 5/22/15

Name: FRANK TORANO

Title: C.F.O.

Witness: _____

CITIVA MEDICAL LLC

MEDICAL MARIHUANA PROGRAM

ATTACHMENT G

FINANCIAL STATEMENT – BUSINESS TRANSACTIONS

CITIVA MEDICAL LLC
FINANCIAL STATEMENT - DISCLOSURES

Name of Individual/Entity	Service(s) Provided	Total Expected Expenses	Total Paid to Date (as of XXXXXXX)
VCC, Inc. d/b/a Cicero Consulting Associates	Development of Registered Organization Application		

CITIVA MEDICAL LLC

MEDICAL MARIHUANA PROGRAM

ATTACHMENT H

SECURITY PLAN

Please find enclosed a Security Plan of the proposed Manufacturing and Dispensing Facilities of Citiva Medical LLC that document how it will comply with the requirements of Article 33 of the New York Public Health Law, 10 NYCRR Part 1004 and applicable State and/or local laws, rules or regulations.

In addition, please refer to Attachment D – Section 5 for a copy of the Security and Controls Operating Plan that will be put in place by the applicant upon approval as a Registered Organization. That document provides additional detail regarding security for the applicant.

Attachment H – Security Plan for Manufacturing, Transportation and Dispensing Facilities

OVERARCHING DESCRIPTION AND APPROACH OF SECURITY AND CONTROL

Citiva Medical is dedicated to security and control to ensure that all New York State laws and regulations are enforced in all of its facilities and operations. Citiva Medical's state-of-the-art security approach has been created to ensure that the patients of New York receive safe, quality-tested approved medical marihuana products in a timely manner. The security and safety of our personnel, products and facilities is of paramount importance in all we do. Citiva Medical has developed a multilayered and overlapping security system to protect the facilities and the processes to manufacture, transport, and dispense approved medical marihuana products. We will work with local law enforcement to enhance security and control at each Citiva Medical location. Citiva Medical has established policies and procedures for security and control that will prevent diversion, abuse, and other illegal or unauthorized conduct.

Redacted Pursuant to N.Y. Public Officers Law, Art. 6

SECURITY AND CONTROL OVERVIEW: MANUFACTURING

Redacted Pursuant to N.Y. Public Officers Law, Art. 6

Redacted Pursuant to N.Y. Public Officers Law, Art. 6

SECURITY AND CONTROL OVERVIEW: TRANSPORT AND DISTRIBUTION

Redacted Pursuant to N.Y. Public Officers Law, Art. 6

SECURITY AND CONTROL OVERVIEW: DISPENSARIES

Redacted Pursuant to N.Y. Public Officers Law, Art. 6

ORGANIZATIONAL CHART

Redacted Pursuant to N.Y. Public Officers Law, Art. 6

CITIVA MEDICAL LLC

MEDICAL MARIHUANA PROGRAM

ATTACHMENT I

FINANCIAL DOCUMENTS

This section of the Application contains the following documents:

- Sources/Uses Statement (note: please refer to Attachment B for the equipment list)
- Audited Financial Statement of Citiva Medical LLC and Affiliate
- Letter from Citiva Medical LLC regarding Recent [redacted] Investment
- Financing Letter of Interest from VG Capital
- Documentation of Sufficient Equity from VG Capital

The total cost for this project is $12,000,000, including $2,500,000 of working capital. This cost will be funded as follows:

- [redacted] – Financing from VG Capital ([redacted] of the total cost)
- [redacted] – Equity from the Citiva Medical LLC ([redacted]% of the total cost)*
  - [redacted] cash on hand as of 04/30/15
  - [redacted] cash received from Empire Choice, LLC (subsequent to 04/30/15)
  - [redacted] received from Mr. James Bennett (subsequent to 04/30/15)

As documented by the bank statement of VG Capital, there is a sufficient amount of funds available to finance this project. VG Capital is also an owner in Citiva Medical LLC. Empire Choice, LLC and Mr. James Bennett are also owners in Citiva Medical LLC. Please refer to the organizational and operational documents under Attachment E.

Lastly, please note that the cash on hand as of 04/30/15 ([redacted], when added to the [redacted] cash received subsequent to 04/30/15, is greater than the [redacted] in equity needed by the applicant. The applicant is including this documentation of equity to show the availability of sufficient equity funding for this project.

The applicant requests that this page be exempt from disclosure under FOIL because it contains information related to trade secrets and personal, confidential financial information.

CITIVA MEDICAL LLC

MEDICAL MARIHUANA APPLICATION

SOURCES		USES	
Cash on Hand as of 4/30/15	[redacted]	Construction of Cultivation and Manufacturing Facility	$6,000,000
Investment Received from Empire Choice, LLC on 5/16/15	[redacted]	Extraction, Processing & Transportation Equipment	$2,000,000
Investment Received from Jim Bennett on 6/3/15	[redacted]	Build out of Four Dispensaries	$1,500,000
Funding from VG Capital per attached Letter	[redacted]	Working Capital for Inventory and NOL's	$2,500,000
	$12,740,000		**$12,000,000**

Note: Citiva Medical LLC has excess sources of funds relative to its expected costs for this project, which documents the availability of suffient funding for this project.

The applicant requests that this page be exempt from disclosure under FOIL because it contains information related to trade secrets and personal, confidential financial information.

Citiva Medical LLC and Affiliate
Combined Financial Statements
April 30, 2015

Citiva Medical LLC and Affiliate
Table of Contents
April 30, 2015

Independent Auditor's Report	1 – 2
Financial Statements	
Combined Balance Sheet	3
Combined Statement of Operations and Members' Equity	4
Combined Statement of Cash Flows	5
Notes to Financial Statements	6 – 10

PragerMetis

Independent Auditor's Report

To the Members of
Citiva Medical LLC and Affiliate

We have audited the accompanying combined financial statements of Citiva Medical LLC and Affiliate (limited liability companies) which comprise the combined balance sheet as of April 30, 2015, and the related combined statement of operations and members' equity, and cash flows for the four month period then ended, and the related notes to the combined financial statements.

Prager Metis CPAs, LLC

11 PENN PLAZA
SUITE 1900
NEW YORK, NY 10123

T 212.644.0099
F 212.486.7502

www.pragermetis.com

Management's Responsibility for the Financial Statements

Management is responsible for the preparation and fair presentation of these combined financial statements in accordance with accounting principles generally accepted in the United States of America; this includes the design, implementation, and maintenance of internal control relevant to the preparation and fair presentation of combined financial statements that are free from material misstatement, whether due to fraud or error.

Auditor's Responsibility

Our responsibility is to express an opinion on these combined financial statements based on our audit. We conducted our audit in accordance with auditing standards generally accepted in the United States of America. Those standards require that we plan and perform the audit to obtain reasonable assurance about whether the combined financial statements are free from material misstatement.

An audit involves performing procedures to obtain audit evidence about the amounts and disclosures in the combined financial statements. The procedures selected depend on the auditor's judgment, including the assessment of the risks of material misstatement of the financial statements, whether due to fraud or error. In making those risk assessments, the auditor considers internal control relevant to the company's preparation and fair presentation of the combined financial statements in order to design audit procedures that are appropriate in the circumstances, but not for the purpose of expressing an opinion on the effectiveness of the company's internal control. Accordingly, we express no such opinion. An audit also includes evaluating the appropriateness of accounting policies used and the reasonableness of significant accounting estimates made by management, as well as evaluating the overall presentation of the combined financial statements.

We believe that the audit evidence we have obtained is sufficient and appropriate to provide a basis for our audit opinion.

Opinion

In our opinion, the combined financial statements referred to above present fairly, in all material respects, the financial position of Citiva Medical LLC and Affiliate as of April 30, 2015, and the results of their operations and their cash flows for the four month period ended in accordance with accounting principles generally accepted in the United States of America.

Prager Metis CPAs, LLC

Prager Metis CPAs, LLC
New York, New York
June 3, 2015

Citiva Medical LLC and Affiliate
Combined Balance Sheet
April 30, 2015

Assets	
Current assets	
Cash	$ 240,091
Prepaid expenses	29,370
Total current assets	269,461
Property and equipment, net	15,727
Security deposit	4,895
Total assets	$ 290,083
Liabilities and members' equity	
Current liabilities	
Accounts payable and accrued liabilities	$ 36,516
Due to members	60,000
Total current liabilities	96,516
Commitments and contingencies	
Members' equity	193,567
Total liabilities and members' equity	$ 290,083

The accompanying notes are an integral part of these financial statements.

Citiva Medical LLC and Affiliate
Combined Statement of Operations and Member's Equity
Four-Month Period Ended April 30, 2015

Net revenue	$ -
Operating expenses	
Consulting fees	252,106
Research and development	60,000
Travel expenses	53,424
Legal and professional fees	52,794
Rent expense	21,240
Meals and entertainment	16,965
Political contributions	13,800
Background checks	12,000
Website development	10,270
Advertising	5,549
Photographer	2,873
Office expenses	1,693
Continuing education	1,500
Parking	627
Telephone and utilities	436
Depreciation expenses	427
Dues and subscriptions	392
Bank charges	261
Auto expense	76
Total operating expenses	506,433
Net loss	(506,433)
Members' equity beginning of the period	-
Add: members' equity contributions	700,000
Members' equity end of the period	$ 193,567

The accompanying notes are an integral part of these financial statements.

Citiva Medical LLC and Affiliate
Combined Statement of Cash Flows
Four-Month Period Ended April 30, 2015

Cash flows from operating activities	
Net loss	$ (506,433)
Adjustments to reconcile net loss to net cash used in operating activities	
Depreciation expenses	427
Changes in operating assets and liabilities	
Prepaid expenses	(29,370)
Security deposit	(4,895)
Accounts payable and accrued liabilities	36,516
Due to members	60,000
Net cash used in operating activities	(443,755)
Cash flows from investing activities	
Acquisition of property and equipment	(16,154)
Net cash used in investing activities	(16,154)
Cash flows from financing activities	
Members' contributions	700,000
Net cash provided by financing activities	700,000
Net increase in cash	240,091
Cash, beginning of the period	-
Cash, end of the period	$ 240,091

The accompanying notes are an integral part of these financial statements.

Note 1 Nature of Operations

Citiva Medical LLC and its affiliate, Citiva LLC (collectively the "Company"), are each registered as a limited liability company. As a limited liability company, the liability of each member is limited to their capital account. Citiva Medical LLC was organized on February 3, 2015 in the state of New York. Citiva LLC was organized on November 12, 2014 in the state of Delaware. The Company did not have start-up activity until January 2015. The Company is in the medicinal cannabis dispensary industry. The Company uses cutting edge technology to develop alternative types of medicines for illnesses and disease states that patients take as part of a total treatment model. The Company has applied under New York State regulations to open four medicinal cannabis dispensary locations and a cultivation facility in the state.

The Company in its current structure and scope of operations has limited history and as such, success of future operations is subject to a number of risks in its current stage of development. These risks include obtaining a license from the state of New York to operate cannabis dispensary clinics and a cultivation facility, limited operating history, competition from substitute products and larger companies, technological changes, limited municipal jurisdictions in the U.S. and the world which allow cannabis distribution, and the availability of continued financing at acceptable terms to fund the Company's strategic plan.

The Company has not begun operating activities and accordingly has accumulated losses of approximately $506,000 through the four-month period ended April 30, 2015, resulting mainly from start-up costs, marketing and New York State regulatory approval activities. All of these activities have been financed through capital contributions of $700,000 through April 30, 2015. Citiva Medical LLC and its affiliate are dependent upon additional financing (capital and/or debt) to fund anticipated further operating losses until obtaining its dispensary license from New York State and ultimately attaining positive cash flow and profitable operations. The Company's management has an alternative strategic operating plan in the event it is not awarded a New York State license. In the near-term, the Company has continued to obtain committed funding to support its strategic plan in New York State by obtaining additional capital contributions of $1,500,000 in the subsequent period.

Note 2 Summary of Significant Accounting Policies

Basis of Presentation

The accompanying combined financial statements include the accounts of Citiva Medical LLC and its affiliate, Citiva LLC, in conformity with accounting principles generally accepted in the United States of America ("GAAP"). All significant intercompany accounts and transactions have been eliminated in combination.

The Company has adopted the provisions of Financial Accounting Standards Board (FASB), Accounting Standards Update 2014-10, *Development Stage Entities (Topic 915)*, issued in June 2014 to remove the reporting distinction between development stage entities and other reporting entities from GAAP.

Note 2 Summary of Significant Accounting Policies (continued)

Use of Estimates
The preparation of the combined financial statements in conformity with accounting principles generally accepted in the United States of America requires management to make estimates and assumptions that affect certain reported amounts and disclosures. Accordingly, actual results could differ from those estimates.

Property and Equipment
Property and equipment is stated at cost, net of accumulated depreciation and amortization. Depreciation and amortization is calculated using straight-line methods over the estimated useful lives of the assets which is 5 to 7 years, or in the case of leasehold improvements, over the life of the lease, if shorter. When equipment is retired, or otherwise disposed of, the cost and related accumulated depreciation are removed from the accounts, and the resulting gain or loss is credited or charged to operations. Maintenance and repairs are expensed as incurred, while replacements and betterments that extend estimated useful lives are capitalized.

Income Taxes
A limited liability company is not a tax paying entity at the corporate level. A member is individually responsible for their share of the Company's income or loss for income tax reporting purposes. Accordingly, there is no provision for federal or state income taxes on the income of the Company. The Company may make distributions to its members to fund their tax liabilities resulting from taxable income that would be passed through to its members.

The Company has no unrecognized tax positions at April 30, 2015 because both Citiva Medical LLC and Citiva LLC are new start-up calendar year 2015 entities. Accordingly, for income tax reporting purposes, 2015 is the open tax year that is subject to examination by taxing authorities. The Company does not have any unrecognized tax positions as of April 30, 2015. Management continually evaluates expiring statutes of limitations, audits, proposed settlements, changes in tax law and new authoritative rulings.

The Company recognizes interest and penalties associated with tax matters as part of the income tax provision and include accrued interest and penalties with the related tax liability in the balance sheets, if applicable. The Company did not have any interest or penalties associated with tax matters as of and for the four-month period ended April 30, 2015.

Advertising
The Company records advertising expense as incurred. Advertising expense for the four-month period ended April 30, 2015 was $5,549.

Note 2 Summary of Significant Accounting Policies (continued)

Website Development Costs
The Company's website development costs incurred in the planning stage such as developing a plan and determining functionality of the site are expensed. Costs incurred during the application and development stage, such as software developed or acquired for general website operations, code for web and database applications are capitalized. The costs of operating the site are expensed as incurred. For the four-month period ended April 30, 2015, the Company had expensed $10,270 for website development. There were no costs capitalized at April 30, 2015.

Research and Development
The Company expenses as incurred research and development costs associated with scientific study of alternative medical cannabis treatments and delivery. For the four-month period ended April 30, 2015, the Company incurred $60,000 of research and development expenses.

Note 3 Property and Equipment

Property and equipment as of April 30, 2015 consists of the following:

Furniture and fixtures	$ 11,708
Office equipment	4,446
	16,154
Less: accumulated depreciation	(427)
	$ 15,727

Depreciation expense for the four-month period ended April 30, 2015 was $427.

Note 4 Related-Party Transactions

Included in consulting fees is $150,000 of payments to members for services provided on behalf of the Company for the four-month period ended April 30, 2015.

At April 30, 2015, the Company had outstanding payments to members amounting to $60,000 which is presented as due to members in the combined balance sheet. These amounts were paid in the subsequent period.

Note 5 Commitments

Operating Leases
The Company leases office space under non-cancellable operating leases expiring on December 31, 2015. The remaining lease payments are $29,370.

Rent expense for the four-month period ended April 30, 2015 was $21,240.

Note 6 Members' Equity

The Company has three classes of membership units and ownership: Common Units, Class A Units and Incentive Units. All units have identical rights except as set forth within the operating agreement.

It is intended that the Incentive Units be treated as profits interest and shall not be obligated to make capital contributions. Distributions of available cash from operations are subject to restrictions as contained within the Incentive Units applicable grant agreement. At April 30, 2015, there were no Incentive Units issued or outstanding.

Distributions of net proceeds from a capital event shall be first distributed to the holders of Class A Units on a pro-rata basis until each holder has received an amount that together with all prior distributions equals the aggregate amount of its capital contributions. The remaining distributions will be made to all members in accordance with their respective ownership percentage, except for distributions with respect to Incentive Units which shall be subject to restrictions contained within the Incentive Units applicable grant agreement.

The units and ownership percentages of the membership unit classes were as follows at April 30, 2015:

	Units	Percentage
Common Units	101,868.40	86.20%
Class A Units	12,590.60	13.80%
Incentive Units	-	-
	114,459.00	100.00%

Units held by members may only be transferred upon the prior written consent of the management committee. Additionally, the Company has the right of first refusal on permitted transfers of units.

The Company has the option but not the requirement to purchase membership units based on a triggering event of a member. A triggering event is defined as bankruptcy, dissolution of marriage of the selling member, the imposition of any pledge, lien, encumbrance or other security interest or involuntary transfer with respect to the units, or the determination by the management committee that such member's continued ownership of its membership interest could have a negative effect on the Company's standing with applicable regulatory agencies.

Note 7 Concentrations of Credit Risk

Financial instruments which potentially subject the Company to concentrations of credit risk consist primarily of cash. The Company maintains its cash with high-credit quality financial institutions. At times, such amounts may exceed FDIC insured limits. The Company has not experienced any losses in such accounts and believes it is not exposed to any significant credit risk on cash.

Note 8 Subsequent Events

The Company has evaluated subsequent events through June 3, 2015, which is the date the financial statements were available to be issued.

CITIVA
MEDICAL

6/3/2015

To whom it may concern,

Subsequent to the 4/30/15 date of the enclosed audited financial statements, Citiva Medical, LLC raised funds from two investors totaling [redacted] Those funds have been deposited to the accounts of Citiva Medical and are available for any and all corporate uses.

The investments were made by:

Empire Choice, LLC [redacted]
James Bennett [redacted]

If you require any further information, please do not hesitate to contact me. Thank you.

Frank Turano – CFO
Citiva Medical, LLC

June 2, 2015

[redacted]
VG Capital, LLC.
1110 South Avenue
Staten Island, New York 10314

Mr. Joshua Stanley
Chief Executive Officer
Citiva Medical, LLC.
7378 Amboy Road
Staten Island, NY 10307

Dear Mr. Stanley,

Please let this serve as our conditional letter of intent, subject to terms to be negotiated, to invest in Citiva Medical LLC. (Citiva). VG Capital is prepared to provide [redacted] in capital and working capital, as detailed in Citiva's application (Application for Registration as a Registered Organization, Attachment G, Statement of Sources and Uses), pending approval by the New York State Department of Health.

Sincerely,

[redacted]
[redacted] VG Capital

The applicant requests that this page be exempt from disclosure under FOIL because it contains information related to trade secrets and information that is highly, personally confidential of a financial nature.

Branch office:
200 Park Avenue
18th Floor
New York, NY 101660005

Financial Advisor:
FREDERICK J. SPAGNOLA
(212)3093000
FRED.SPAGNOLA@UBS.COM

UBS Client Review

as of June 1, 2015

Prepared for

VG Capital Group LLC

Accounts included in this review

Account	Name	Type
[redacted]	• VG Capital Group LLC	• Business Service Account
	• VG Capital Group LLC	• UBS Strategic Advisor
	• VG Capital Group LLC	• Business Service Account

What's inside

Client summary. 2
Important information about this report. 3

The applicant requests that this page be exempt from disclosure under FOIL because it contains information related to trade secrets and personal, confidential financial information.

Client summary

as of June 01, 2015

Assets

		% of assets	Value as of 05/06/2015 ($)	Value as of 06/01/2015 ($)
[redacted]	VG CAPITAL	29.27%	[redacted]	
	VG CAPITAL	42.01%		
	VG CAPITAL	28.71%		
Total		**100%**		

UBS

Disclosures applicable to accounts at UBS Financial Services Inc.

This section contains important disclosures regarding the information and valuations presented here. This report presents information since December 31, 2002. This report does not include complete account activity or performance of your accounts before this date. All information presented is subject to change at any time and is provided only as of the date indicated. The information in this report is for informational purposes only and should not be relied upon as the basis of an investment or liquidation decision. UBS FS accounts statements and official tax documents are the only official record of your accounts and are not replaced, amended or superseded by any of the information presented in these reports.

UBS FS offers a number of investment advisory programs to clients, acting in our capacity as an investment adviser, including fee-based financial planning, discretionary account management, non-discretionary investment advisory programs, and advice on the selection of investment managers and mutual funds offered through our investment advisory programs. When we act as your investment adviser, we will have a written agreement with you expressly acknowledging our investment advisory relationship with you and describing our obligations to you. At the beginning of our advisory relationship, we will give you our Form ADV brochure(s) for the program(s) you selected that provides detailed information about, among other things, the advisory services we provide, our fees, our personnel, our other business activities and financial industry affiliations and conflicts between our interests and your interests.

Please review the report content carefully and contact your Financial Advisor with any questions.

The account listing may or may not include all of your accounts with UBS FS. The accounts included in this report are listed under the "Accounts included in this review" shown on the first page or listed at the top of each page.

Client Accounts: This report includes all assets in the accounts listed and may include eligible and ineligible assets in a fee-based program. Since ineligible assets are not considered fee-based program assets, the inclusion of such securities will distort the actual performance of your accounts and does not reflect the performance of your accounts in the fee-based program. **As a result, the performance reflected in this report can vary substantially from the individual account performance reflected in the performance reports provided to you as part of those programs.** For fee-based programs, fees are charged on the market value of eligible assets in the accounts and assessed quarterly in advance, prorated according to the number of calendar days in the billing period. When shown on a report, the risk profile and return objectives describe your overall goals for these accounts. For each account you maintain, you choose one return objective and a primary risk profile. If you have questions regarding these objectives or wish to change them, please contact your Financial Advisor to update your accounts records.

Performance: This report presents accounts activity and performance starting 12/31/02. For accounts opened prior to 12/31/02, this report does not include the complete account activity or performance of your accounts prior to that date. For consolidated reports, the Performance Start Date will be the earliest performance start date of any of the individual accounts selected for the consolidation time period. If an individual account's performance information is not available for a full reporting time period (month to date, quarter to date, year to date or performance to date), the individual's net of fee time weighted return will not be displayed. For consolidated accounts that include different account Performance Start Dates, the consolidated Additions/Withdrawals, Income Earned and Investment Appreciation/ Depreciation will include all activity that occurred during the consolidated reporting time period. Accounts that hold or held insurance products will be reported on from the month end date of when insurance and annuity activity could be obtained from the carrier.

Time-weighted Returns (prior to 10/31/2010): The report displays a time weighted rate of return (TWR) that is calculated using the Modified Dietz Method. This calculation uses the beginning and ending portfolio values for the month and weighs each contribution/withdrawal based upon the day the cashflow occurred. Periods greater than one month are calculated by linking the monthly returns. The TWR gives equal weighting to every return regardless of amount of money invested, so it is an effective measure for returns on a fee based account. All periods shown which are greater than 12 months are annualized.

Time-weighted Returns (after 10/31/2010): The report displays a time weighted rate of return (TWR) that is calculated by dividing the portfolio's daily gain/loss by the previous day's closing market value. All cash flows are posted at end of day. The TWR gives equal weighting to every return regardless of amount of money invested, so it is an effective measure for returns on a fee based account. Periods greater than one day are calculated by linking the daily returns. All periods shown which are greater than 12 months are annualized.

Money-weighted returns: Money-weighted return (MWR) is a measure of the rate of return for an asset or portfolio of assets. It is calculated by finding the daily Internal Rate of Return (IRR) for the period and then compounding this return by the number of days in the period being measured. The MWR incorporates the size and timing of cash flows, so it is an effective measure returns on a portfolio.

Annualized Performance: All performance periods greater than one year are calculated (unless otherwise stated) on an annualized basis, which represents the return on an investment multiplied or divided to give a comparable one year return.

Cumulative Performance: A cumulative return is the aggregate amount that an investment has gained or lost over time, independent of the period of time involved.

Net of Fees and Gross of Fees Performance: Performance is presented on a "net of fees" and "gross of fees" basis, where indicated. Net returns do not reflect Program and wrap fees prior to 10/31/10 for accounts that are billed separately via invoice through a separate account billing arrangement. Gross returns do not reflect the deduction of fees, commissions or other charges. The payment of actual fees and expenses will reduce a client's return. The compound effect of such fees and expenses should be considered when reviewing returns. For example, the net effect of the deduction of fees on annualized performance, including the compounded effect over time, is determined by the relative size of the fee and the account's investment performance.

Benchmark/Major Indices: The past performance of an index is not a guarantee of future results. Any benchmark is shown for informational purposes only and relates to historical performance of market indices and not the performance of actual investments. The benchmark is not managed and does not reflect the deduction of any fees and expenses, which will lower results. Indices are not actively managed and investers cannot directly invest in indices. The portfolio's investment strategy is not restricted to securities in the benchmark. Further, there is no guarantee that an investor's account will meet or exceed the stated benchmark. Index performance information has been obtained from third parties deemed to be reliable. We have not independently verified this information, nor do we make any representations or warranties to the accuracy or completeness of this information.

Custom Time Periods: If represented on this report, the performance start date and the performance end date have been selected by your Financial Advisor in order to provide performance and account activity information for your account for the specified period of time only. As a result only a portion of your account's activity and performance information is presented in the performance report, and, therefore, presents a distorted representation of your account's activity and performance.

Net Deposits/Withdrawals: When shown on a report, this information represents the net value of all cash and securities contributions and withdrawals, program fees (including wrap fees) and other fees added to or subtracted from your accounts from the first day to the last day of the period. When fees are shown separately, net deposits / withdrawals does not include program fees (including wrap fees). When investment return is displayed net deposits / withdrawals does not include program fees (including wrap fees). For security contributions and withdrawals, securities are calculated using the end of day UBS FS price on the day securities are delivered in or out of the accounts. Wrap fees will be included in this calculation except when paid via an invoice or through a separate accounts billing arrangement.

Dividends/Interest: Dividend and interest earned, when shown on a report, does not reflect your account's tax status or reporting requirements. Use only official tax reporting documents (i.e. 1099) for tax reporting purposes. The classification of private investment distributions can only be determined by referring to the official year-end tax-reporting document provided by the issuer.

Change in Accrued Interest: When shown on a report, this information represents the difference between the accrued interest at the beginning of the period from the accrued interest at the end of the period.

Change in Value: Represents the change in value of the portfolio during the reporting period, excluding additions/withdrawals, dividend and interest income earned and accrued interest.

Fees: Fees represented in this report include program and wrap fees. Program and wrap fees prior to October 1, 2010 for accounts that are billed separately via invoice through a separate account billing arrangement are not included in this report. Commissions are not included in the fees calculation.

Net of fees: When indicated, the information is shown net of fees and commission charges to your accounts for the time period shown. For example, if your accounts are charged an asset based fee during the month the report is produced, net of fees performance information would reflect the deduction of those fees. Please see your program documents regarding fee schedules.

Performance Start Date Changes: The Performance Start Date for accounts marked with a '*' have changed. Performance figures of an account with a changed Performance Start Date may not include the entire history of the account. The new Performance Start Date will generate performance returns and activity information for a shorter period than is available at UBS FS. As a result, the overall performance of these accounts may generate better performance than the period of time that would be included if the report used the inception date of the account. UBS FS recommends reviewing performance reports that use the inception date of the account because reports with longer time frames are usually more helpful when evaluating investment programs and strategies. Performance reports may include accounts with inception dates that precede the new Performance Start Date and will show

Disclosures applicable to accounts at UBS Financial Services Inc. (continued)

performance and activity information from the earliest available inception date.
The change in Performance Start Date may be the result of a performance gap due to a zero-balance that prevents the calculation of continuous returns from the inception of the account. The Performance Start Date may also change if an account has failed one of our performance data integrity tests. In such instances, the account will be labeled as 'Review Required' and performance prior to that failure will be restricted. Finally, the Performance Start Date will change if you have explicitly requested a performance restart. Please contact your Financial Advisor for additional details regarding your new Performance Start Date.

Closed Account Performance: Accounts that have been closed may be included in the consolidated performance report. When closed accounts are included in the consolidated report, the performance report will only include information for the time period the account was active during the consolidated performance reporting time period.

Portfolio: For purposes of this report "portfolio" is defined as all of the accounts presented on the cover page or the header of this report and does not necessarily include all of the client's accounts held at UBS FS or elsewhere.

Percentage: Portfolio (in the "% Portfolio" column) includes all holdings held in the account(s) selected when this report was generated.Broad asset class (in the "% broad asset class" column) includes all holdings held in that broad asset class in the account(s) selected when this report was generated.

Pricing: All securities are priced using the closing price reported on the last business day preceding the date of this report. Every reasonable attempt has been made to accurately price securities; however, we make no warranty with respect to any security's price. Please refer to the back of the first page of your UBS FS. accounts statement for important information regarding the pricing used for certain types of securities, the sources of pricing data and other qualifications concerning the pricing of securities. To determine the value of securities in your account, we generally rely on third party quotation services. If a price is unavailable or believed to be unreliable, we may determine the price in good faith and may use other sources such as the last recorded transaction. When securities are held at another custodian or if you hold illiquid or restricted securities for which there is no published price, we will generally rely on the value provided by the custodian or issuer of that security.

Cash: Cash on deposit at UBS Bank USA is protected by the Federal Deposit Insurance Corporation (FDIC) up to $250,000 in principal and accrued interest per depositor for each ownership type. Deposits made in an individual's own name, joint name, or individual retirement account are each held in a separate type of ownership. Such deposits are not guaranteed by UBS FS. More information is available upon request.

Margin: The quantity value may indicate that all or part of this position is held on margin or held in the short account. When an account holds a debit balance, this debit balance is incorporated into the account's total market value and deducted from the total value. When calculating the percent of portfolio on each security, the percentage will be impacted by the total market value of the account. Therefore, if the account's market value is reduced by a debit value of a holding the percent of portfolio will be greater and if the account's market value is increased by a holding then the percent of portfolio will be less.

Accrued Interest: Interest that has accumulated between the most recent payment and the report date may be reflected in market values for interest bearing securities.

Outside Assets and Liabilities: Information Regarding Outside Assets and Liabilities of Accounts other than the primary Client may not be shared with the primary Client or any other third-party without the prior written consent of such account holder. The information as to other assets and liabilities that the client holds at other financial institutions, including their market value, is based solely on information previously provided by the Client and may not be "As-of" the date indicated. We have not verified, and are not responsible for the accuracy and completeness of this information and no specific advice may be given with respect to the outside assets and liabilities.

Liability Accounts: Interest rates are subject to change from time to time in the sole discretion of The Firm. This report is for informational purposes only and may or may not include all holdings or client accounts. All information presented is subject to change at any time and is provided only as of the date indicated. The Firm's periodic account statements and official tax documents are the only official record of client accounts and are not superseded, replaced, or amended by any of the information presented in these reports. Clients should not rely on this information in making purchase or sell decisions, for tax purposes or otherwise.

UBS BANK USA is an affiliate of UBS Financial Services Inc. and a member of the Federal Deposit Insurance Corporation.

FDIC insurance applies only to deposits at UBS Bank USA, not to deposits at UBS AG, Stamford Branch or bank deposits placed through the UBS International Deposit Account program. SIPC protection applies to money market sweep fund holdings but not bank deposits.

Client Summary: This report is for informational purpose only. All information presented is subject to change at any time and is provided only as of the date indicated. The Firm's periodic account statements and official tax documents are the only official record of your accounts and are not superceded, replaced, or amended by any of the information presented in these reports. You should not rely on this information in making purchase or sell decisions, for tax purposes or otherwise.

Account(s) are not Part of the Legal statement household for the Primary Client displayed. This information may not be shared with the Primary Client OR any other third-party without the prior written consent of the holder of these account(s).

Net Worth: The Net Worth value displayed is purely based on the Assets Market Values and Liabilities Market Values displayed on the report. It does not take into account other Assets or Liabilities held at UBS or in accounts held outside UBS, which are not displayed on the report.

5V/5F Liability Accounts: Interest Rates are subject to change from time to time in the sole discretion of The Firm.

This loan account is held at UBS Bank USA, an affiliate of UBS Financial Services Inc. that provides banking and credit services, including securities backed loans. This information was provided by UBS Bank USA and is displayed for your convenience. For all questions related to securities backed loans provided by UBS Bank USA, please contact your Financial Advisor.

Credit Lines and Margin: Interest rates are subject to change from time to time in the sole discretion of The Firm.

Credit Lines and Margin are subject to credit approval. Loans made through a Credit Line are extended solely at the discretion of UBS Bank USA under the terms of the Credit Line Agreement. Loans made through a Margin Account are extended solely at the discretion of UBS Financial Services Inc. under the terms of the Margin Agreement. Neither a Credit Line nor Margin is a committed loan facility and neither UBS Bank USA nor UBS Financial Services Inc. is obligated to the client or any third party to satisfy borrowing requests. Based on the lending eligible accounts shown above: The potential credit line is for discussion purposes only and is not a loan commitment or commitment to lend by any UBS company. The potential credit line is subject to change at any time at the sole discretion of the lender. Available Credit/Margin Availability is capped at the lesser of margin availability or the margin default of $1,000,000 for diversified portfolios and $500,000 for concentrated portfolios.

Mortgage: Interest rates are subject to change from time to time in the sole discretion of The Firm.

Mortgage information displayed on the report is not official mortgage information and is provided as a courtesy for informational purposes. The information may not reflect recent activity, as it is provided to us by the servicer on a delayed basis. Your client should refer to their official mortgage statement that they receive from their servicer for current transaction details. Client questions regarding mortgage original amount, balance, payments, interest rate, escrow,etc. should be directed to the mortgage servicer.

Credit Card: Interest rates are subject to change from time to time in the sole discretion of The Firm.

Please note that information provided on this report about UBS Visa Signature® credit cards is solely as a courtesy to you. The UBS Visa Signature credit card and account are issued by UBS Bank USA. UBS Bank USA sends your client the official statement for this account and your client should make his or her payment according to instructions of UBS Bank USA. For the UBS Visa Signature credit card products, "Interest Rate" refers to the APR for Purchases. "Credit Line Approval / Mortgage Amount" refers to approved credit card Credit Line. "Balance / Issue Amount" refers to Current Balance as of today's posted transactions. "Available Credit" refers to today's credit card Credit Line availability.

Account changes: At UBS, we are committed to helping you work toward your financial goals. So that we may continue providing you with financial advice that is consistent with your investment objectives, please consider the following two questions:
1) Have there been any changes to your financial situation or investment objectives?
2) Would you like to implement or modify any restrictions regarding the management of your account?
If the answer to either question is "yes," it is important that you contact your Financial Advisor as soon as possible to discuss these changes. For MAC advisory accounts, please contact your investment manager directly if you would like to impose or change any investment restrictions on your account.

ADV disclosure: A complimentary copy of our current Form ADV Disclosure Brochure that describes the advisory program and related fees is available through your Financial Advisor.Please contact your Financial Advisor if you have any questions.

Important information for former Piper Jaffray and McDonald Investments clients: As an accommodation to former Piper Jaffray and McDonald Investments clients, these reports include performance history for their Piper Jaffray accounts prior to August 12, 2006 and McDonald Investments accounts prior to February 9, 2007, the date the respective accounts were converted to UBS FS. UBS FS has not independently verified this information nor do we make any representations or warranties as to the accuracy or completeness of that information and will not be liable to you if any such information is unavailable, delayed or inaccurate.

Disclosures applicable to accounts at UBS Financial Services Inc. (continued)

For insurance, annuities, and 529 Plans, UBS FS relies on information obtained from third party services it believes to be reliable. UBS FS does not independently verify or guarantee the accuracy or validity of any information provided by third parties. Information for insurance, annuities, and 529 Plans that has been provided by a third party service may not reflect the quantity and market value as of the previous business day. When available, an "as of" date is included in the description.

Investors outside the U.S. are subject to securities and tax regulations within their applicable jurisdiction that are not addressed in this report. Nothing in this report shall be construed to be a solicitation to buy or offer to sell any security, product or service to any non-U.S. investor, nor shall any such security, product or service be solicited, offered or sold in any jurisdiction where such activity would be contrary to the securities laws or other local laws and regulations or would subject UBS to any registration requirement within such jurisdiction.

UBS FS All Rights Reserved. Member SIPC.

CITIVA MEDICAL LLC

MEDICAL MARIHUANA PROGRAM

ATTACHMENT J

STAFFING PLAN

The enclosed Staffing Plan documents the ability of Citiva Medical LLC to staff its proposed project and meet the January 1, 2016 milestone to begin serving registered patients at its four (4) Dispensary Facilities. Please note that Citiva Medical LLC intends to begin operations using an indoor growing facility in order to meet this milestone. Furthermore, in 2016, Citiva Medical LLC will construct a greenhouse that will support the expansion of its operations.

STAFFING PLAN

TABLE OF CONTENTS

STAFFING PROFILE 1
ORGANIZATIONAL CHART 1
WORKFORCE ROLE REQUIREMENTS 11
CLASSIFICATION / SKILLS ASSESSMENT / EDUCATION 16
Key Personnel 16
Staff Positions – Medical Marihuana Contact 21
Staff Position – All Others 24
BIOS OF KEY PERSONNEL 27
President and Chief Executive Officer (CEO) 27
Chief Operations Officer (COO) 27
Chief Financial Officer (CFO) 28
Chief Marketing Officer 29
Chief Medical Officer and Physician Education 29
Chief of Dispensary Operations 30
Director of Human Resources 30
Director of Research and Development 31
Director of Physician Education 31
Director of Operations 31
Director of Compliance 32
STAFFING PROCEDURES AND POLICIES 33
Staffing Procedures 33
General Hiring Policies 34
STAFFING TIMELINE AND HIRING PLAN 35
APPLICANTS KNOWLEDGE OF FEDERAL LAWS 37
Federal Laws Relating to Marihuana 37
Knowledge of Federal Employment and Labor Laws and Policies 38
MAINTENANCE OF CONFIDENTIAL EMPLOYEE INFORMATION POLICY 38
WORKPLACE TRAINING REQUIREMENTS 38
ONGOING EVALUATION OF STAFF PERFORMANCE 39
PROGRESSIVE DISCIPLINARY PROCEDURES 39
Purpose 39

Formal Disciplinary Measures and Related Procedures 39
General Guidelines when Implementing Progressive Discipline 42
ATTACHMENTS: HR FORMS 43
GENERAL INFORMATION 45

STAFFING PROFILE

This proposed Staffing Plan for Citiva Medical LLC ("Citiva", "We", "Us", "Our", "Applicant") meets and addresses the application of the New York State Department of Health Medical Marihuana Program Rules and Regulations ("DOH") and §1004.5(b)(18)(i)-(v) of the Codes, Rules and Regulations of the State of New York ("NYCRR").

Citiva believes having a skilled, knowledgeable and well-trained staff is paramount to a successful business operation. An integral part of our implementation strategy is to have a comprehensive staff selection process, employing a knowledgeable staff team and focusing on employee training and development. Our staff will be responsible for important health and safety measures such as cultivating medical marihuana, advising patients on effects and side effects of various strains and delivery methods and working with the DOH for oversight of the medical marihuana program.

ORGANIZATIONAL CHART

The following organizational chart shows the structure of the organization and the relationships and relative ranks of its parts and positions. Note that boxes of employees for which in the normal course of fulfilling their job descriptions will handle marihuana or of positions directly above them in the hierarchy are tinted green. Those not expected to handle marihuana are tinted blue.

The "Workforce Role Requirements Table" below includes the classification, the role responsibility, skills required, number of staff required to fulfill the role, unit of labor (FTE/PT/SAN) status, and the rate unit for all classifications. The following job classifications, responsibilities, and unit rates are subject to change depending upon current markets and organization needs and industry / company changes.

(*Continued on next page.*)

Senior Team

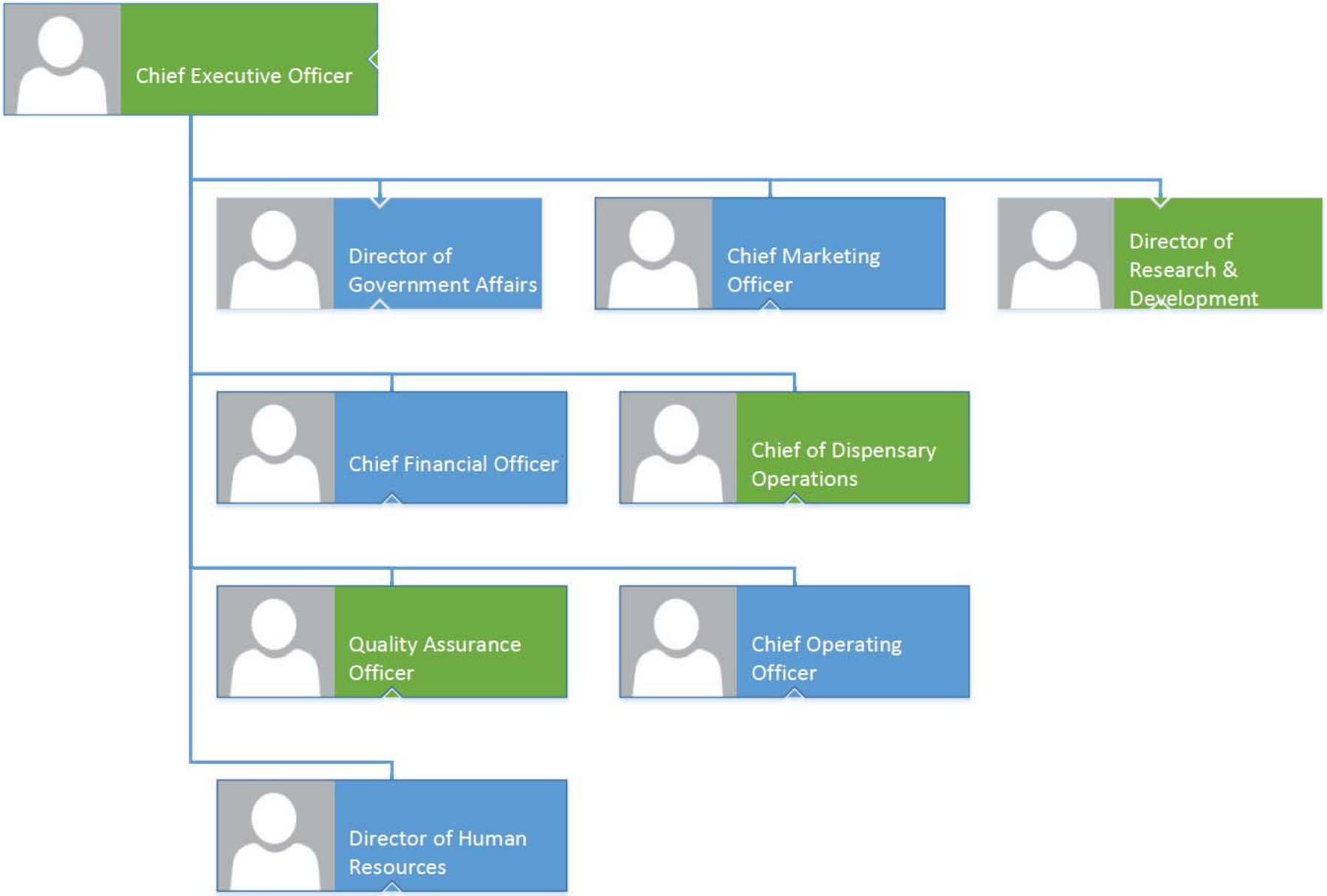

Handles Medical Marihuana

Quality

Operations

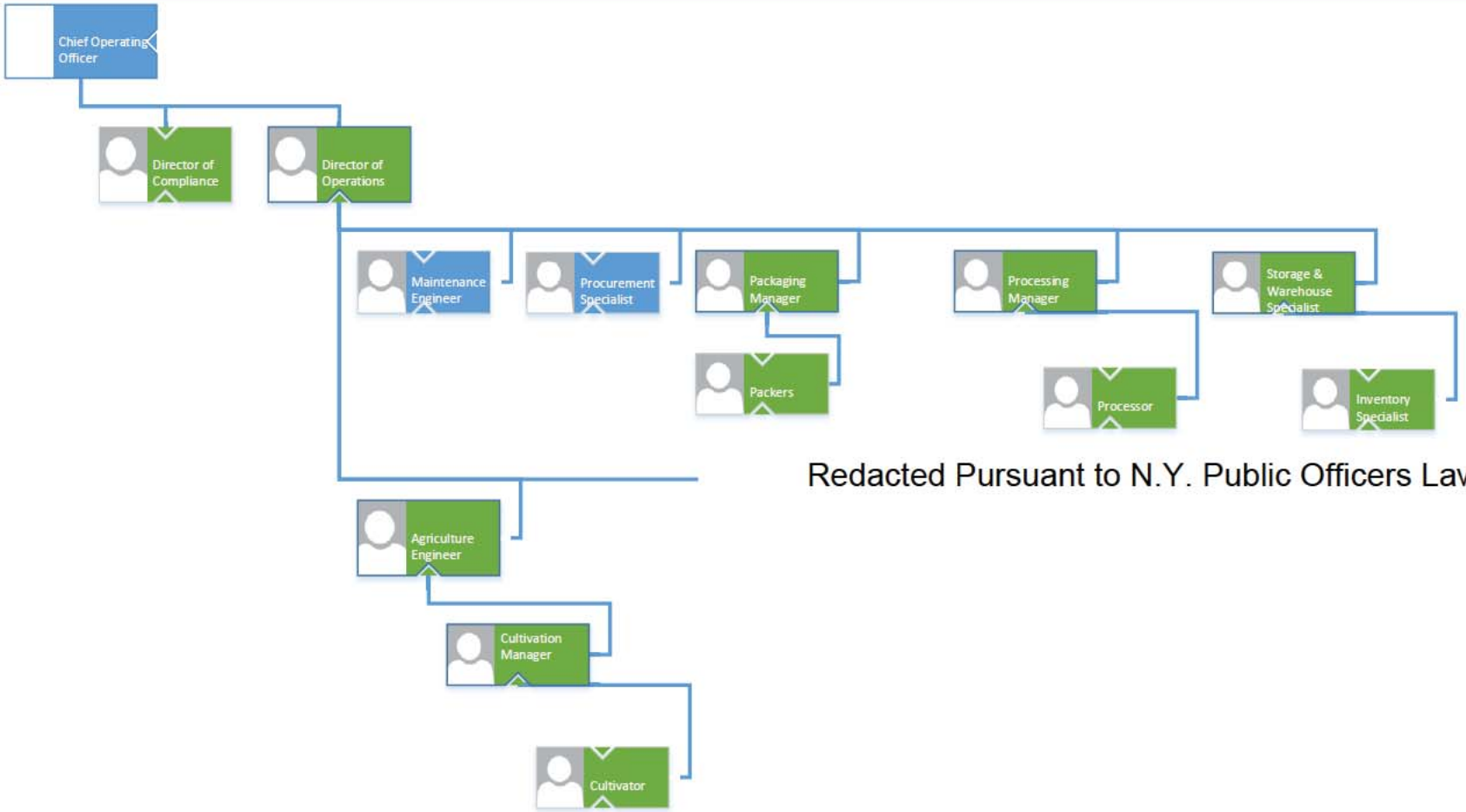

Redacted Pursuant to N.Y. Public Officers Law, Art. 6

Handles Medical Marihuana

Sales & Marketing

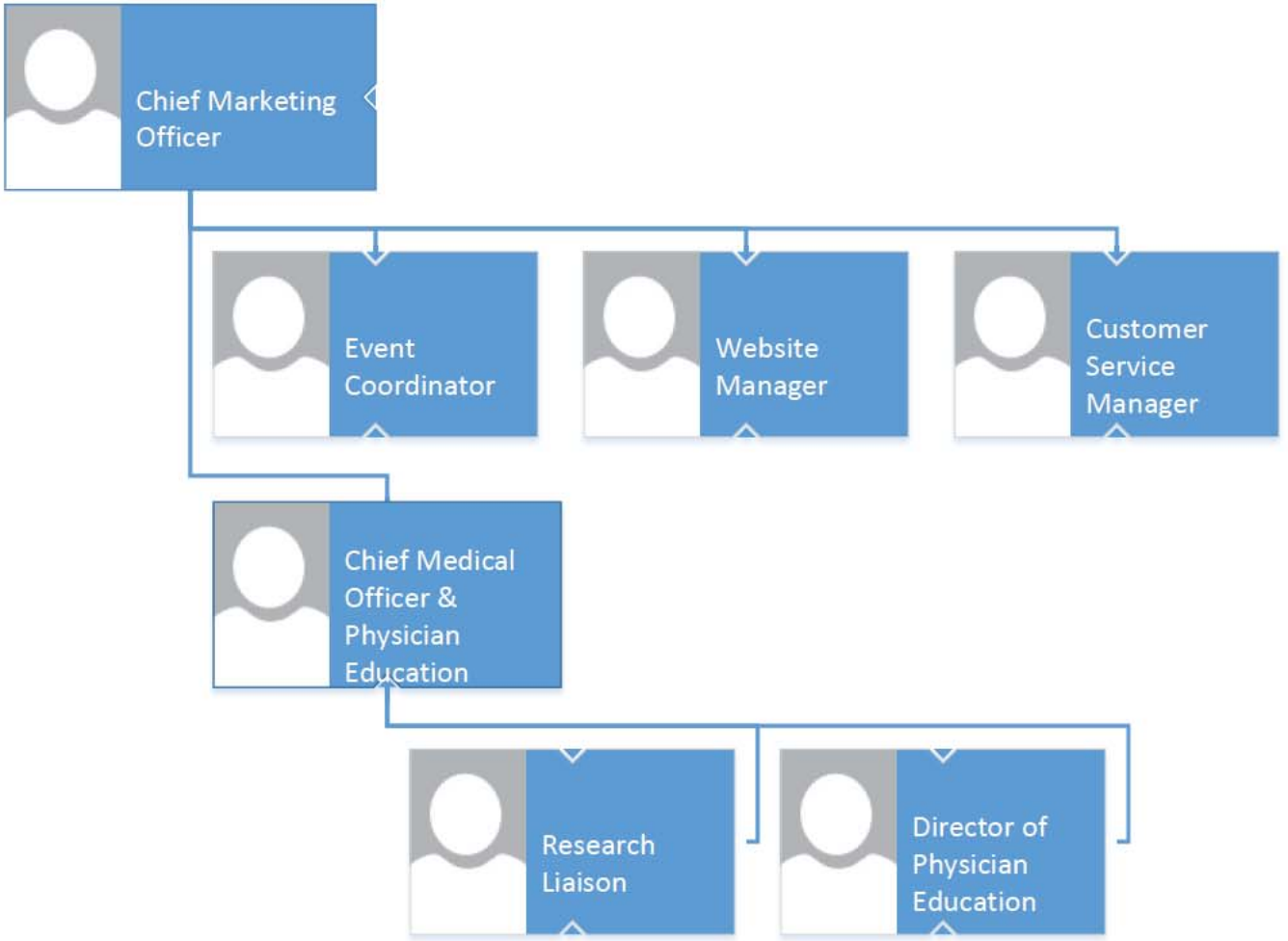

Finance

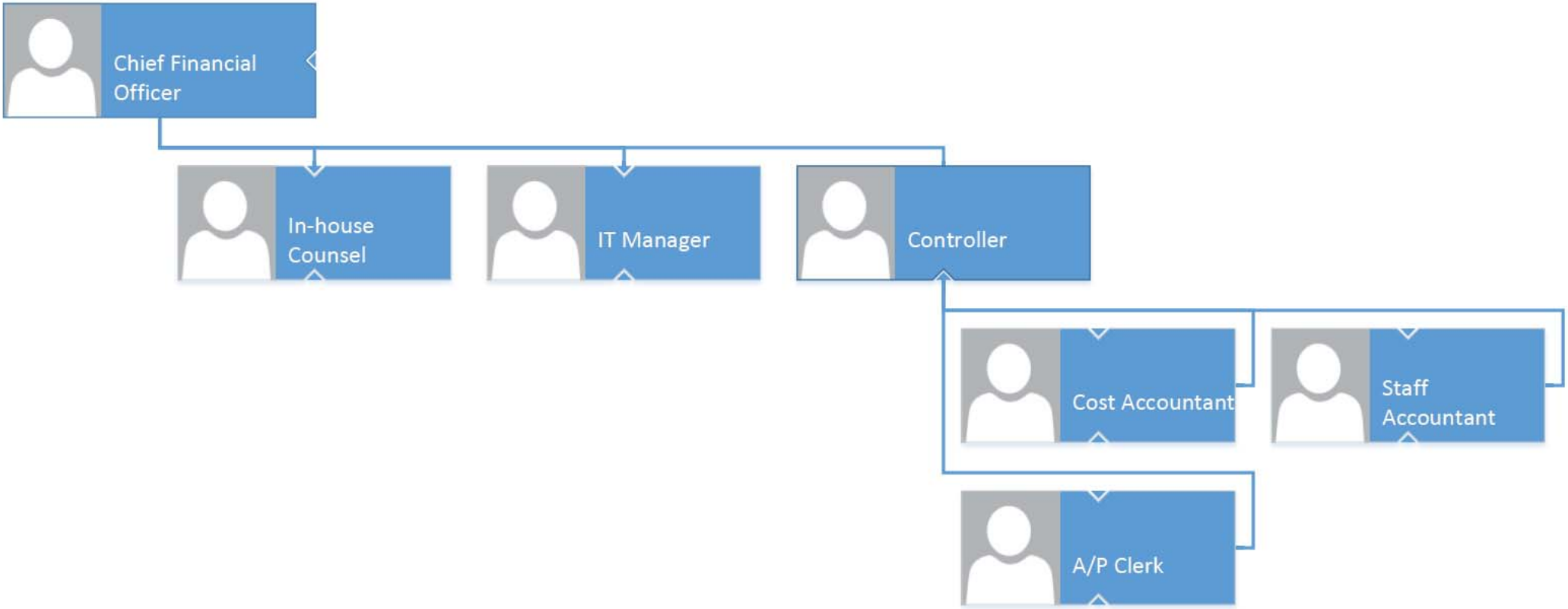
Chief Financial Officer
In-house Counsel
IT Manager
Controller
Cost Accountant
Staff Accountant
A/P Clerk

Pharmaceutical & Retail

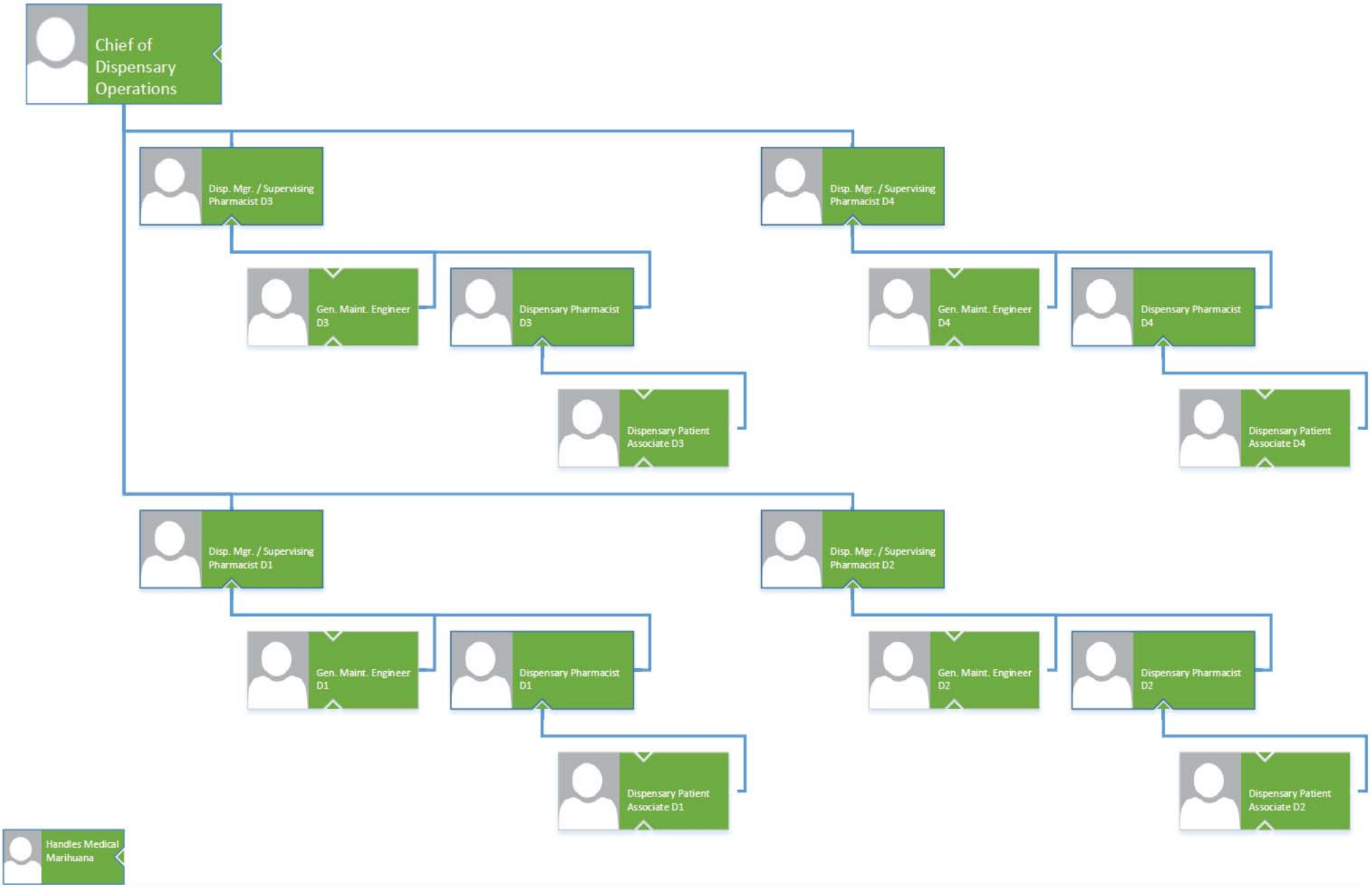

Research & Development

Human Resources

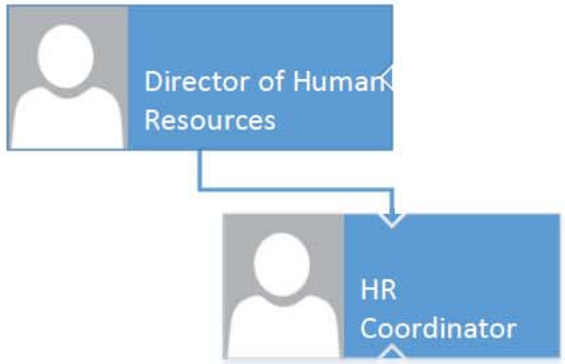

Government Affairs

WORKFORCE ROLE REQUIREMENTS

JOB CLASSIFICATION	NAME	ROLE RESPONSIBILITY	REQUIRED SKILL	NUMBER REQUIRED ON STAFF	UNIT OF LABOR (FTE/PT/SAN)
President Chief Executive Officer	Josh Stanley	Provide long range strategic planning to lead the company through evolving legal and regulatory conditions. Manage and balance all stakeholder interests.	Prior experience as a CEO in a highly regulated and legally evolving manufacturing industry. Background in medical marihuana a plus.	1	FTE
Chief Operating Officer	Michael Caridi	Ensure efficiency and safety across all operational areas. Ensure directors, managers and supervisors properly follow DOH regulations in all areas of handling product.	Prior experience in a vertically integrated, manufactured, consumer packaged goods (CPG) industry.	1	FTE
Chief Financial Officer	Frank Turano	Ensure all aspects of financial operations are sound. Safeguard investor resources, ensure compliance with all NY State regulations and GAAP. Interface with outside investors and provide timely reporting.	Prior senior financial experience in a manufacturing environment. Full knowledge of GAAP and experience with outside audit.	1	FTE
Chief Marketing Officer	David Palmieri	Lead department to communicate about Citiva externally to suppliers, doctors and consumers. Ensure high service quality.	Prior experience in a senior marketing role for a significant, CPG company.	1	FTE
Chief Medical Officer and Physician Education	Dr. Jack D'Angelo	Provide leadership in communicating with medical professionals.	Public speaking, prior communications experience and a medical degree.	1	FTE

JOB CLASSIFICATION	NAME	ROLE RESPONSIBILITY	REQUIRED SKILL	NUMBER REQUIRED ON STAFF	UNIT OF LABOR (FTE/PT/SAN)
Director of Human Resources	George Lewis	Manage and oversee all employee-related affairs. Ensure hiring and termination processes adhere to all state and federal requirements. Negotiate and interface with union if one is elected.	Prior experience leading HR functions in a manufacturing, CPG environment. Experience in both union and non-union situations ideal.	1	FTE
Chief of Dispensary Operations	Kim Volman	Experience in NY State as a pharmacist.	NY State pharmacy license.	1	FTE
Director of Research and Development	Dr. John Pierce	Research new packaging and medicinal applications.	Experience as a researcher in chemistry.	1	FTE
Director of Physician Education	Dr. Christopher Perez	Work with Chief Medical Officer to conduct physician outreach to	Experience as an MD or Pharmacist ideally in NY.	1	FTE
Director of Operations	Norton Arbelaez	Oversee cultivation, extraction and packing of product.	Experience with marihuana, chemistry and manufacturing.	1	FTE
In-house Counsel	TBD	In-house legal expertise.	Law degree (JD), ideally barred in NY State, and also ideally with experience in medical marihuana law.	1	FTE
Director of Compliance	Sean T. McAllister	Ensure corporate-wide compliance with regulations.	Law degree or deep experience with NY and federal marihuana and food regulations.	1	FTE
Director of Security	TBD	Oversee corporatewide security.	Ideally prior law enforcement experience.	1	FTE
Quality Assurance Officer	TBD	Ensure GAP's and GMP's are strictly adhered to corporatewide	Certification in GAP. Extensive quality experience in agricultural env.	1	FTE
Director of Government Affairs	TBD	Liaison with legislators. Inform legislators about industry issues and	Previous experience as lobbyist or in government. NY experience preferred.	1	FTE

JOB CLASSIFICATION	NAME	ROLE RESPONSIBILITY	REQUIRED SKILL	NUMBER REQUIRED ON STAFF	UNIT OF LABOR (FTE/PT/SAN)
		bring legislator concerns to company.			
Controller	TBD	Oversee all accounting functions, ensuring compliance with GAAP and any other state or federal regulations.	Previous experience as controller or assistant controller in a manufacturing environment. CPA highly desirable.	1	FTE
A/P Clerk	TBD	Ensure timely payments to vendors.	Accuracy and attention to detail.	1	FTE
Cost Accountant	TBD	Design schedules and measurement metrics to assess properly costs of bringing product to market. Ensure compliance with DOH guidelines as pertain to accurate costing.	Several years accounting experience in a manufacturing environment. Previous costing desirable.	1	FTE
Staff Accountant	TBD	General accounting work as assigned.	Undergraduate degree in accounting or equivalent experience.	1	FTE
IT Manager	TBD	Ensure security and efficiency of systems functions.	Several years of experience in system maintenance in small-medium sized network environments.	1	FTE
HR Coordinator	TBD	Assist in hiring, payroll, and other HR functions.	Prior experience in payroll and other HR functions.	1	FTE
Research Liaison	Kathleen Caridi	Conduct industry research to uncover business opportunities and threats.	Related experience in market assessment.	1	FTE
Customer Service Manager	TBD	Handle consumer complaints and interface with associated regulatory agencies. Participate with Event Coordinator in spreading good name of company publicly.	General business experience in customer service or field marketing.	1	FTE
Website Manager	TBD	Maintain company website.	Prior experience in website design and maintenance.	1	FTE
Event Coordinator	TBD	Plan, arrange and manage company presence at B2B and B2C public events.	Prior experience in PR or field marketing.	1	FTE
GAP Sr. Staff Member	TBD	Ensure GAP is followed	Accreditation in Good Agricultural	2	FTE

JOB CLASSIFICATION	NAME	ROLE RESPONSIBILITY	REQUIRED SKILL	NUMBER REQUIRED ON STAFF	UNIT OF LABOR (FTE/PT/SAN)
		companywide.	Practices		
Maintenance Engineer – Plant Facility	TBD	Conduct preventative maintenance and repairs on all facility equipment	Prior experience in manufacturing maintenance; agricultural highly desirable.	1	FTE
Procurement Specialist	TBD	Handle timely purchasing of all raw materials and other needed business items.	Prior experience in purchasing	1	FTE
Dispensary Pharmacist	TBD	Oversee the dispensary.	Active NY State Pharmacy license	4	FTE
Dispensary Manager / Supervising Pharmacist	TBD	Assist in overseeing the dispensary	Active NY State Pharmacy license	4	FTE
Dispensary Patient Associate	TBD	Assist patients in finding correct products for their needs and vending them.	Good customer service skills, patience and compassion in dealing with the public.	24	FTE
General Maintenance Engineer – Dispensary	TBD	Keep dispensary clean, working and orderly.	Prior experience as a janitor or equivalent.	4	FTE
Agriculture Engineers	TBD	Manage growth of marihuana plants. Direct leads and cultivators in correct handling and treatment of the plants.	Strong background and knowledge of medical marihuana. GAP accreditation desirable.	2	FTE
Lead Cultivators	TBD	Lead the cultivators in proper handling and treatment of the plants.	Agricultural background. GAP accreditation desirable.	2	FTE
Cultivators	TBD	Grow and care for plants.	Some farming experience.	15	FTE
Processing Leads	TBD	Lead processors on extraction of substances from plant matter.	Prior experience in extraction or general organic chemistry, or equivalent.	2	FTE
Processors	TBD	Extract substances form plant matter.	Undergraduate degree in chemistry or equivalent.	2	FTE
Packaging Leads	TBD	Lead packers in assembling final packages of medicine for shipping.	Prior manufacturing experience in food or beverage or equivalent.	2	FTE
Packers	TBD	Pack medicine into final package for shipping.	Prior manufacturing experience desired.	2	FTE

JOB CLASSIFICATION	NAME	ROLE RESPONSIBILITY	REQUIRED SKILL	NUMBER REQUIRED ON STAFF	UNIT OF LABOR (FTE/PT/SAN)
Security Supervisors	TBD	Oversee security officers in both facility and dispensary security.	Prior experience in industrial security and training in DOH regulations regarding medical marihuana.	2	FTE
Plant Security Officers	TBD	Secure the manufacturing facility.	Prior security experience desired.	16	FTE
Dispensary Security Officers	TBD	Secure the dispensaries.	Prior security experience desired.	8	FTE
Warehouse Supervisor	TBD	Secure and oversee the warehouse.	Prior warehouse supervision required.	1	FTE
Inventory Control Specialist	TBD	Fulfill orders and bring finished goods into the warehouse.	Attention to detail. Prior warehouse experience desirable.	1	FTE

(*Continued on next page.*)

CLASSIFICATION / SKILLS ASSESSMENT / EDUCATION

Key Personnel

To operate, the anticipated key executives of our organization include:

A. **Chief Executive Officer (CEO)**

Job Description Summary: The CEO will effectively lead, direct, and oversee operations to position the company at the forefront of the emerging cannabis industry. As the cannabis industry continues to evolve in an emerging global market, Citiva offers an outstanding opportunity to the proven executive who has successfully led a high-growth start-up. This individual will have a passion for leading companies in a start-up environment while exhibiting passion for the emerging cannabis marketplace. Establishes credibility throughout the organization as an effective developer of solutions to business operations and challenges. Provides leadership and management to ensure that the mission and core values of the company are put into practice. The CEO will be an individual with strong problem solving and communication skills, and an ability to identify and solve problems.

Minimum Education Requirements: Bachelor's degree, MBA a plus.

Minimum Experience Requirements: 10+ years' experience leading a company and successfully leading the day to day responsibility for an organization with profit and loss responsibilities across the enterprise. Must be 21 years of age or older and cannot have been convicted of any felony of sale or possession of drugs, narcotics, or controlled substances in accordance with the requirements of section 3364 of the Public Health Law.

B. **Chief Operations Officer (COO)**

Job Description Summary: The COO is primarily responsible for facilitating business growth and profitability by developing, implementing and achieving the operational strategy, plan and quality/financial metrics of the organization. The COO will provide leadership to the operations organization and will optimize the efficiencies of the organization's diverse teams. The COO provides business leadership, operational knowledge, and the resource management required to meet the needs of the associates and for the business unit's success. This individual will oversee all manufacturing and distribution. The COO will develop and implement new policies and procedures while also making improvements on operating procedures as needed along the way. Must be comfortable working in an ambiguous environment, as this industry changes quickly. Must also be comfortable scaling a company as it grows. Reports to the CEO and is a key member of the executive team.

Minimum Education Requirements: Bachelor's degree. A Master's degree in business administration or a related field a plus.

Minimum Experience Requirements: 5+ years of experience running specialty food / beverage company, and 10+ years of experience as COO, General Manager or other executive leader. Experience working with regulatory agencies (State cannabis governing body, FDA, OSHA, etc.). Must be 21 years of age or older and cannot have been convicted of any felony of sale or possession of drugs, narcotics, or controlled substances in accordance with the requirements of section 3364 of the Public Health Law.

C. **Chief Financial Officer (CFO)**

Job Description Summary: Responsible for directing the fiscal functions of the corporation in accordance with generally accepted accounting principles issued by the Financial Accounting Standards Board, the Securities, any other regulatory and advisory organizations and in accordance with DOH rules and regulations. This person manages the financial and administrative functions of this growing cannabis company. Directs and controls company employees and outsourced services within the finance and accounting, IT and legal. The Chief Financial Officer will have a significant impact on the company's success by maintaining a high level of financial control and analysis, developing programs to support a professional work environment to attract and retain high-caliber employees, and, enhance and maintain a fully functioning IT infrastructure to support the company's business needs. This is a "shirt sleeve" environment directly supervising employees in the accounting and finance department, and must be willing to perform all finance operations as needed. Reports to the CEO and is a key member of the executive team.

Minimum Education Requirements: Bachelor's degree in Accounting or Finance; CPA certification is highly desirable.

Minimum Experience Requirements: 7+ years of experience as a CFO and prior public accounting experience in a manufacturing or industrial distribution environment a plus.

D. **Chief Marketing Officer**

Job Description Summary: Reporting to the Chief Executive Officer, the Chief Marketing Officer will be responsible for building and leading a world class marketing team that enables Citiva to realize its mission of delivering best-in-class medicinal marihuana to patients. This individual will have strategic and operational responsibility for all aspects of marketing of Citiva's products. Key to the candidate's success will be a highly incorporated approach that brings true market insight to the discovery, development and delivery of Citiva's products. Such an integrated approach will require that the candidate have the ability and a passion to really understand and articulate the science and evolving medical marihuana treatment paradigms. Along these lines, this person will be responsible for solidifying and further developing relationships with key thought leaders in the market.

Minimum Education Requirements: Bachelor's degree in science, business or marketing related area is desired and having an MBA is a strong plus.

Minimum Experience Requirements: At least fifteen years of marketing leadership, with extensive experience product launches.

E. **Chief Medical Officer and Physician Education**

Job Description Summary: The Chief Medical Officer and Physician Education is responsible for developing the company's global product portfolio strategy to bring products to market in compliance with global regulatory, legislative and medical/health requirements. In addition the Chief Medical Officer and Physician Education will act as the primary spokesperson for the company with key opinion

leaders at advisory boards. The Chief Medical will drive the advancement of patient safety by applying his or her scientific and medical expertise and use her credibility to inform and influence healthy growing practices, perform clinical studies, lead strategic research activities on cannabis, research and develop new strains and ensuring patient's overall health goals are achieved.

Minimum Education Requirements: M.D. Board certified and active unrestricted license in U.S.

Minimum Experience Requirements: 10+ years of clinical experience, 4 years of people management experience, 1 year of project management experience, 1 year of budget management experience.

F. **Chief of Dispensary Operations**

Job Summary: Primary purpose of this position is to oversee the company's dispensary's operations. Frequent independent judgments are essential. The incumbent is also required to perform all tasks in a safe manner consistent with corporate policies and state laws.

Minimum Education Requirements: Bachelor's degree (BS), Doctoral degree (PHARM.D.), or equivalent in Pharmacy.

Minimum Experience Requirements: More than ten (10) years' experience in retail, and five (5) years' experience working with pharmacy systems. Must be 21 years of age or older and cannot have been convicted of any felony of sale or possession of drugs, narcotics, or controlled substances in accordance with the requirements of section 3364 of the Public Health Law.

G. **Director of Human Resources**

Job Summary: The Director, Human Resources is responsible for the strategic management of the company's personnel resources. Works directly with the Chief Executive Officer and has primary responsibility for upholding HR practices that support the mission and vison of the organization; providing strategic direction in all personnel, compliance, employee relations, labor relations, staff development, affirmative action and equal employment opportunity functions of Citiva Medical. This individual will provide strategic guidance and counsel to senior leaders to meet the ongoing growth demands and evolving plan and mission for Citiva Medical, while ensuring understanding and specific compliance to required HR practices and procedures.

Minimum Education Requirements: Bachelor's degree. A Master's degree in business administration or a related field a plus. SPHR (Senior Professional in Human Resources) Certification is a plus.

Minimum Experience Requirements: 7+ years of experience in operational human resources management in a manufacturing or consumer products environment.

H. **Director of Research and Development**

Job Summary: The Director of Research and Development will play a key leadership role in guiding new product development on Citiva's core businesses as well as driving new category innovation. This person will ensure R&D activities lead to achieving strategic objectives, improving sales and market position, and optimizing

profitability. Reporting to the CEO, this person will lead the development and commercialization of line extensions, New-to-the-World Products and Categories, and drive process and plant efficiencies and improvements leading to sizable cost savings. This person will manage and help build the R&D department at Citiva and giving Citiva a competitive advantage in the businesses in which it competes.

Minimum Education Requirements: Bachelor's degree. Medical degree a plus

Minimum Experience Requirements: 5-7 years of relevant experience in pharmaceuticals industry or medical field. 3-5 years of recent experience in research & development management. Must be 21 years of age or older and cannot have been convicted of any felony of sale or possession of drugs, narcotics, or controlled substances in accordance with the requirements of section 3364 of the Public Health Law.

I. **Director of Government Affairs**

Job Summary: The Director of Government Affairs will advance sound public health and legislative policies in areas of importance to Citiva at the state and national level. The Director will be responsible for directing administrative and legislative strategy and work collaboratively with other members of government affairs department as well as other Citiva departments in order that each department is aware of issues affecting Citiva's business, departmental activities are consistent with government affairs initiatives, government affairs initiatives are consistent with Citiva policy objectives, and help Citiva identify opportunities to work with government at the state and federal level to advance its mission. Will also utilize expertise and knowledge from inside and outside Citiva to develop and craft policy positions. Focus in raising awareness and building support for the cannabis industry's issues. In addition, works with other national organizations to increase the cannabis industry profile. Assure timely and accurate actions/responses to legislative and regulatory requests.

Minimum Education Requirements: BA or BS degree and advanced degree preferred.

Minimum Experience Requirements: 5-7 years of relevant experience in state government, health-care industry, public health policy or related policy field. 3-5 years of management experience.

J. **Director of Physician Education**

Job Summary: The Director of Physician Education is responsible for setting strategy for physician training. Specifically, this will involve developing platforms for measuring and ensuring physician competence with the on-label use of company products. The Director of Physician Education will also develop assessments of physician cognitive skills and plans for physician development. The incumbent is responsible for overseeing and providing direction to the education and training team for training operations for all courses including but not limited to faculty selection and logistics; managing client relationships with faculty and field trainers, and insuring appropriate continuity between sales and physician training content and messaging. Reports to Chief Medical Officer and Physician Education.

Minimum Education Requirements: Bachelor's degree and advanced degree either in Education, Business, or Biological Sciences Experience.
Minimum Experience Requirements: 7+ years in management with direct reports from cross functional teams. Experience in the cannabis industry is a plus.

K. **Director of Operations**

Job Summary: The Director of Operations is primarily responsible assisting the COO in facilitating business growth and profitability by developing, implementing and achieving the operational strategy, plan and quality/financial metrics of the organization. Assist in overseeing all manufacturing and distribution. Support COO in implementing new policies and procedures while also making improvements on operating procedures as needed along the way. Must be comfortable working in an ambiguous environment, as this industry changes quickly. Must also be comfortable scaling a company as it grows. Reports to the COO.
Minimum Education Requirements: Bachelor's degree. A Master's degree in business administration or a related field a plus.
Minimum Experience Requirements: 3+ years of experience running specialty food / beverage company, and 5+ years of experience as General Manager. Experience working with regulatory agencies (State cannabis governing body, FDA, OSHA, etc.). Must be 21 years of age or older and cannot have been convicted of any felony of sale or possession of drugs, narcotics, or controlled substances in accordance with the requirements of section 3364 of the Public Health Law.

L. **In-House Counsel**

Job Summary: In-House Counsel will be responsible for providing legal counsel and thought leadership to Citiva on a wide variety of commercial and strategic initiatives across the global organization. You will ensure that company operates within the law at all times, offer counsel on legal issues, create an effective guardian of the organization and facilitate business strategies development. This person will be able to ensure legal compliance and limit risk exposure. Responsible for negotiating, writing, reviewing, summarizing, researching and executing a wide variety of agreements for Citiva, and other general business contracts. The attorney will be responsible for negotiating, drafting and providing strategic counsel for projects representing millions of dollars of revenue and annual spend for Citiva. Reports directly to the CFO.
Minimum Education Requirements: J.D. and licensed to practice in New York.
Minimum Experience Requirements: 5+ years of relevant industry experience and 3+ years' experience at a law firm. 2+ years in management with direct reports from cross functional teams. Knowledge and familiarity with cannabis laws is a plus. Must be proficient in US commercial and contract law and have experience negotiating and drafting a variety of contracts including distribution, supply, licensing, collaboration, and strategic transactions (stock and asset purchase agreements).

M. **Director of Compliance**

Job Summary: The Director of Compliance will be responsible for the development, implementation and communication of the manufacturing compliance program as well as the development, implementation and ongoing revision of policies and procedures to assist the business in their efforts to comply with all applicable state and federal laws and regulations. The Director of Compliance is also responsible for the development and implementation of compliance training materials. Collaborates with Compliance Audit to support projects related to the Compliance Audit, Self-Monitoring, Data Mining and Risk Assessment programs for the relevant business.

Minimum Education Requirements: B.S. or B.A. degree is required. Law degree preferred.

Minimum Experience Requirements: At least 5 years solid working knowledge and work experience in quality management in a manufacturing environment or more years of experience in a business/legal compliance organization. Subject matter expertise in the following areas: current Good Manufacturing Practice (GMP), Good Agricultural Practice (GAP).

Staff Positions – Medical Marihuana Contact

On the preceding organization chart and for the positions for which the day-to-day job responsibilities necessitate coming into contact with or handling medical marihuana, or positions supervising those have been color-coded green. For all of those positions, Citiva requires compliance with §3364 of the Public Health Law that all such position holders to be 21 years of age or older and never to have been convicted of any felony of sale or possession of drugs, narcotics, or controlled substances. Further requirements include (i) a senior staff member with a minimum of one year experience in good agricultural practices (GAP); (ii) a Quality Assurance Officer who shall exercise oversight of the organization's practices and procedures and who has documented training and experience in quality assurance and quality control procedures; and (iii) a requirement that all staff involved in the manufacturing be trained in and conform to general sanitary practices.

<u>Pharmaceutical and Retail</u>

A. **Dispensary Manager / Supervising Pharmacist**

Job Description Summary: Reporting to the Director of Pharmaceutical and Retail, the primary purpose of this position is to train store staff and assist in the oversight of company's dispensary's operations. Frequent independent judgments are essential. The incumbent is also required to perform all tasks in a safe manner consistent with corporate policies and state laws.

Minimum Education Requirements: Bachelor's degree (BS), Doctoral degree (PHARM.D.), or equivalent in Pharmacy

Minimum Experience Requirements: More than five (5) years' experience in retail, and three (3) years' experience working with pharmacy systems. Must be 21 years of age or older and cannot have been convicted of any felony of sale or possession of drugs, narcotics, or controlled substances in accordance with the requirements of section 3364 of the Public Health Law.

B. **Dispensary Pharmacist**

Job Description Summary: Reporting to the Dispensary Manager / Supervising Pharmacist, the primary purpose of this position is educate and assist patients in the purchase of therapeutic marihuana. Frequent independent judgments are essential. The incumbent is also required to perform all tasks in a safe manner consistent with corporate policies and state laws.

Minimum Education Requirements: Bachelor's degree (BS), Doctoral degree (PHARM.D.), or equivalent in Pharmacy

Minimum Experience Requirements: More than two (2) years' experience in retail, and one (1) years' experience working with pharmacy systems. Must be 21 years of age or older and cannot have been convicted of any felony of sale or possession of drugs, narcotics, or controlled substances in accordance with the requirements of section 3364 of the Public Health Law.

C. **Dispensary Patient Associate**

Job Description Summary: Reporting to the Dispensary Pharmacist, the primary purpose of this position is to provide general support at company's dispensary. Frequent independent judgments are essential. The incumbent is also required to perform all tasks in a safe manner consistent with corporate policies and state laws.

Minimum Education Requirements: High school degree or GED. Bachelor's degree a plus.

Minimum Experience Requirements: More than two (2) years' experience in retail, and one (1) years' experience working with pharmacy systems. Must be 21 years of age or older and cannot have been convicted of any felony of sale or possession of drugs, narcotics, or controlled substances in accordance with the requirements of section 3364 of the Public Health Law.

D. **General Maintenance Engineer**

Job Summary: Under the direction of the Dispensary Manager / Supervising Pharmacist, this position is responsible for performing janitorial duties for modular buildings and related areas. Quality customer service will be provided to the client at all times. Knowledge or willingness to learn proper cleaning techniques is essential.

Minimum Education Requirements: High School Diploma or GED

Minimum Experience Requirements: More than two (2) years' related experience. Must be 21 years of age or older and cannot have been convicted of any felony of sale or possession of drugs, narcotics, or controlled substances in accordance with the requirements of section 3364 of the Public Health Law.

<u>Operations</u>

A. **Packaging Lead**

Job Description Summary: Operate packaging equipment in production facility. Lead and train new packers in proper use and safety practices of the equipment.

Minimum Education Requirements: High School Diploma or GED

Minimum Experience Requirements: More than two (2) years' related experience. Must be 21 years of age or older and cannot have been convicted of any felony of sale

or possession of drugs, narcotics, or controlled substances in accordance with the requirements of section 3364 of the Public Health Law.

B. **Packers**

Job Description Summary: Operate packaging equipment in production facility.
Minimum Education Requirements: High School Diploma or GED
Minimum Experience Requirements: More than two (2) years' related experience. Must be 21 years of age or older and cannot have been convicted of any felony of sale or possession of drugs, narcotics, or controlled substances in accordance with the requirements of section 3364 of the Public Health Law.

C. **Processing Lead**

Job Description Summary: Perform extractions from plant material. Lead and train new Processors in proper use and safety of extraction equipment.
Minimum Education Requirements: High School Diploma or GED
Minimum Experience Requirements: More than two (2) years' related experience. Must be 21 years of age or older and cannot have been convicted of any felony of sale or possession of drugs, narcotics, or controlled substances in accordance with the requirements of section 3364 of the Public Health Law.

D. **Processors**

Job Description Summary: Perform extractions from plant material in the production facility.
Minimum Education Requirements: High School Diploma or GED
Minimum Experience Requirements: More than two (2) years' related experience. Must be 21 years of age or older and cannot have been convicted of any felony of sale or possession of drugs, narcotics, or controlled substances in accordance with the requirements of section 3364 of the Public Health Law.

E. **Warehouse Supervisor**

Job Description Summary: Primary responsible party for receipts of finished goods from the production line into the warehouse and fulfillment of loads of finished goods out to the dispensaries.
Minimum Education Requirements: High School Diploma or GED
Minimum Experience Requirements: More than two (2) years' related experience. Must be 21 years of age or older and cannot have been convicted of any felony of sale or possession of drugs, narcotics, or controlled substances in accordance with the requirements of section 3364 of the Public Health Law.

F. **Inventory Control Specialist**

Job Description Summary: Assist the Warehouse Supervisor in all matters relating to the warehouse.
Minimum Education Requirements: High School Diploma or GED
Minimum Experience Requirements: More than two (2) years' related experience. Must be 21 years of age or older and cannot have been convicted of any felony of sale

or possession of drugs, narcotics, or controlled substances in accordance with the requirements of section 3364 of the Public Health Law.

G. **Agricultural Engineers**

Job Description Summary: Lead all aspects of plant cultivation, genetics control, grafting, and other functions.

Minimum Education Requirements: B.S. in Biology or equivalent

Minimum Experience Requirements: More than two (2) years' related experience. Prior experience in marihuana cultivation is essential. Must be 21 years of age or older and cannot have been convicted of any felony of sale or possession of drugs, narcotics, or controlled substances in accordance with the requirements of section 3364 of the Public Health Law.

H. **Lead Cultivators**

Job Description Summary: Grow and cultivate the plants. Lead and train new Cultivators in proper techniques and use of apparatus related to the growing areas.

Minimum Education Requirements: High School Diploma or GED

Minimum Experience Requirements: Prior experience in marihuana cultivation is preferred. More than two (2) years' related experience. Must be 21 years of age or older and cannot have been convicted of any felony of sale or possession of drugs, narcotics, or controlled substances in accordance with the requirements of section 3364 of the Public Health Law.

I. **Cultivators**

Job Description Summary: Grow and cultivate the plants.

Minimum Education Requirements: High School Diploma or GED

Minimum Experience Requirements: Some related experience. Must be 21 years of age or older and cannot have been convicted of any felony of sale or possession of drugs, narcotics, or controlled substances in accordance with the requirements of section 3364 of the Public Health Law.

<u>Quality</u>

A. **GAP Senior Staff Member**

Job Description Summary: Ensure GAP (Good Agricultural Practices) are strictly followed at the production facilities. Design and lead training programs in GAP and sanitary manufacturing practices for all manufacturing staff. Assist Quality Assurance Officer in all matters related to product quality.

Minimum Education Requirements: B.S. in related field. Certification in good agricultural practices.

Minimum Experience Requirements: Minimum one (1) year post GAP certification working in agricultural field.

Staff Position – All Others

On the preceding organization chart and for general staff positions below, those have been color-coded blue. For all of the blue color-coded positions, there is no general requirement

to comply with §3364 of the Public Health Law, in terms of fingerprinting and background checks.

Operations

A. **Procurement Specialist**

Job Description Summary: Ensure sufficient raw materials and supplies for production and facility operations are on hand.

Minimum Education Requirements: High School Diploma or GED

Minimum Experience Requirements: Some experience in purchasing, accounting, or equivalent

B. **General Maintenance Engineer**

Job Summary: Under the direction of the COO, this position is responsible for performing preventative maintenance and repairs of facility equipment.

Minimum Education Requirements: High School Diploma or GED

Minimum Experience Requirements: More than two (2) years' related experience.

Sales and Marketing

A. **Event Coordinator**

Job Description Summary: Plan, arrange and manage company presence at B2B and B2C public events

Minimum Education Requirements: High School Diploma or GED.

Minimum Experience Requirements: Some prior experience in PR or field marketing.

B. **Website Manager**

Job Description Summary: Administer the company website.

Minimum Education Requirements: High School Diploma or GED.

Minimum Experience Requirements: Demonstrated ability to maintain websites.

C. **Customer Service Manager**

Job Description Summary: Handle consumer complaints and interface with associated regulatory agencies. Participate with Event Coordinator in spreading good name of company publicly.

Minimum Education Requirements: High School Diploma or GED.

Minimum Experience Requirements: General business experience in customer service or field marketing.

Finance and Accounting

A. **IT Manager**

Job Description Summary: Ensure security and efficiency of systems functions.

Minimum Education Requirements: B.S. in Computer Science or equivalent.

Minimum Experience Requirements: Several years of experience in system maintenance in small-medium sized network environments.

B. **Controller**

Job Description Summary: Oversee all accounting functions, ensuring compliance with GAAP and any other state or federal regulations.

Minimum Education Requirements: B.S. in Accounting; CPA preferred.

Minimum Experience Requirements: Previous experience as controller or assistant controller in a manufacturing environment.

C. **Staff Accountant**

Job Description Summary: Miscellaneous, routine accounting work as assigned by the controller.

Minimum Education Requirements: Undergraduate degree in accounting or equivalent.

Minimum Experience Requirements: Prior accounting work in a manufacturing environment.

D. **Cost Accountant**

Job Description Summary: Design schedules and measurement metrics to assess properly costs of bringing product to market. Ensure compliance with DOH guidelines as pertain to accurate cost reporting.

Minimum Education Requirements: B.S. in Accounting

Minimum Experience Requirements: Several years accounting experience in a manufacturing environment. Previous costing experience highly preferred.

E. **A/P Clerk**

Job Description Summary: Process and pay bills.

Minimum Education Requirements: High School Diploma or GED.

Minimum Experience Requirements: Some prior accounting experience.

Human Resources

A. **HR Coordinator**

Job Description Summary: Assist in hiring, payroll, and other HR functions.

Minimum Education Requirements: High School Diploma or GED.

Minimum Experience Requirements: Prior experience in payroll and other HR functions.

(*Continued on next page.*)

BIOS OF KEY PERSONNEL

President and Chief Executive Officer (CEO)

Josh Stanley is a leading medical cannabis entrepreneur and advocate working to advance the medical cannabis industry in the United States and throughout the world. Josh has worked in the medical cannabis industry for over eight years and [redacted] Josh's commitment to responsible cannabis reform has separated him from the world of "pot culture." He started Colorado's first true political action committee and 501c4, the Medical Marijuana Industry Group, which he co-chaired.

In 2010 Josh assisted in the drafting of House Bill 1284, the first bill of its kind to further define and establish Colorado's medicinal cannabis state regulatory structure through the Colorado Department of Revenue. The following year he co-authored House Bill 1043 and was responsible for writing the research and development portion of the bill. Josh sat on the rules and regulations board of the Colorado Department of Revenue's Medical Marijuana Enforcement Division as well as the rules and regulations board for research and development. Josh worked with National Geographic Channel on a groundbreaking television series called American Weed that chronicled [redacted] mission to keep medical marijuana legal in Colorado and tracked his observational research studies and patient successes with medical cannabis.

Josh is co-credited with creating the idea to breed a non-psychoactive strain of the cannabis plant with low Tetrahydrocannabinol (THC) and high Cannabidiol (CBD) content. This specialized sativa varietal of medical cannabis has proven to be beneficial for varying degrees of epilepsy in both pediatric and adult patients. Josh's effort to help children restore their lives with high-CBD cannabis extracts made international headlines in 2013 and was prominently featured on Sanjay Gupta's highly acclaimed CNN documentary special WEED and WEED 2 in March of 2014.

Redacted Pursuant to N.Y. Public Officers Law, Art. 6

Josh is fast at work breeding new and improved strains of medicinal cannabis, which are currently being incorporated in medical trials sponsored by Strains of Hope. He continues to advocate daily for patient rights and his role as a leading spokesperson for the medical cannabis industry has led to Colorado becoming the first state in the world to vote in favor of ending cannabis prohibition. A much sought after speaker, Josh has the ability to sift through the propaganda and fear encompassing the medical cannabis industry and delivers a compassionate appeal to end prohibition.

Chief Operations Officer (COO)

Michael Caridi's career started as a [redacted] As a hands-on employee, he learned the business from the bottom up. Mr. Caridi earned a Bachelor

of Science Degree in Business Administration from Wagner College, and for over 26 years he had worked in all operational phases of the company.

Mr. Caridi's expertise and enthusiasm were rewarded in [redacted] He is also very active in community affairs in New York. He sits on the Board of Trustees Executive committee of Staten Island Hospital. He also is a Board of Trustee of the North Shore –Long Island Jewish Health System and is a member of the Audit and Corporate Compliance committee. Caridi is also extremely proud to serve as the Chairman for the Vincent Gruppuso Foundation. This organization currently provides grants to Children's organization for education and health care. He also sits on the Board for the St George Theater where he was appointed Treasurer in October 2009. This organization is dedicated to the restoration of the historic St George Theatre and its development as a cultural and performing arts centre for the community. Additionally Mr. Caridi is on the sports committee of his local parish.

Chief Financial Officer (CFO)

Frank Turano is a native New Yorker, [redacted] Mr. Turano earned a Bachelor of Science in Economics, with a dual concentration in Accounting & Finance from the Wharton School at the University of Pennsylvania, where he graduated Magna cum Laude in 1990.

Redacted pursuant to N.Y. Public Officers Law, Art.6

Redacted pursuant to N.Y. Public Officers Law, Art.6

Chief Marketing Officer

David Palmieri is a [redacted]. As a native New Yorker, Mr. Palmieri studied at Wagner College and Polytech University of New York and earned a Bachelor of Science Degree from The State University of New York. He earned a Doctorate of Chiropractic degree from New York Chiropractic College and developed a multi-discipline approach to spinal pain working with a number of well-respected rehabilitation, neurological and orthopedic physicians in his community.

Since 1988 David Palmieri has developed and managed multidisciplinary medical teams in the implementation of new emerging medical technologies that meet the needs of suffering patients in New York State. He always had a special interest in human biological systems, clinical healthcare and emerging medical technologies. [redacted] his interest in newly developing non-narcotic, non-invasive technologies grew significantly. He has spent countless hours researching standard protocol treatments as well as new emerging treatments for related illnesses. Always working closely with medical doctors and personnel to provide individualized health care to patients.

In 2004, Mr. Palmieri published a book, *A Last Stand, An American Tragedy*, under the pen name David James. It told a personal journey of his search to help a dying family member which threw him into the world of the politics of cancer research and the trial and tribulations that independent scientists and emerging clinical innovation must endure to bring new treatment protocols into mainstream healthcare. [redacted] and continued his interest in non-invasive and non-narcotic clinical interventions for suffering patients. [redacted]

Chief Medical Officer and Physician Education

Dr. Jack D'Angelo [redacted]. He received his undergraduate degrees in Theology and Biology at Lafayette College in Easton, PA. Dr. Jack (as he is commonly known), completed a pediatric residency at Georgetown University, a fellowship in pediatric physical medicine at the National Children's Medical center and a residency in Physical Medicine and Rehabilitation at the George Washington University Hospital and the National Rehabilitation hospital – all located in Washington D.C. In 2009, he received his M.B.A. from the George Washington School of Business in Washington D.C. He has been in active member of the non-profit community on Staten Island serving as the President of the Richmond County Medical Society, President of the Staten Island Heart Society and was a founding board member of the Community Health Center of Richmond. He has been the recipient of the Staten Island Chamber of Commerce, Louis B. Miller, Award, 2011 and the South Shore Democratic Club, Community Service Award, 2011. Dr. D'Angelo is board certified and is a Diplomat of the American Academy of Pediatrics. [redacted]

Redacted pursuant to N.Y. Public Officers Law, Art.6

Chief of Dispensary Operations

Kim Volman has over 20 years of leadership experience in the pharmaceutical industry. He earned a Bachelor of Science on Pharmacy at St John's University, where he graduated in 1997. In 2001, Kim ventured into his start up pharmacy company S & K Pharmacy. [redacted] He has extensive experience in Pharmaceutical Compounding and implemented various new compounding techniques in order to diminish patient tolerance to opioids. He has actively worked with many Managed Long Term Care Plans in New York State, Nursing, Home Health Care Aid Organizations, JASA, and FEGS creating cost saving services such as Medication Blister Packing. Thus, improving patient medication compliance and safety, while decreasing health care costs to the patient. Mr. Volman is an active member of PSSNY and SUN B which helps make a difference for seniors in the community. He continues to work in the Pharmacy industry developing better and more cost effective methods of providing optimum patient health care while diminishing patient drug dependence to certain medications.

Director of Human Resources

George Lewis is a 25 year veteran of branded consumer product goods. After graduating from Duke University and later receiving his MBA from University of Chicago, [redacted]

George Lewis brings to the business those decades of best-in-class operational finance experience managing manufacturing and distribution costs in branded, high volume environments. He has managed three top-tier manufacturing ERP system installations and integrations including employee training and testing. He will establish strong internal financial and operational controls that meet or exceed all requirements while insuring consistent access to high-quality medicine.

Director of Research and Development

Complementing the skills, talents and experiences of Company's other principals are those of another skilled and experienced professional – Dr. John Pierce ("Dr. Pierce"). Dr. Pierce will serve Company on an exclusive basis in the Northeast and will establish protocols and training with respect to extraction systems and techniques, production of alternative dosage forms and establishment of quality controls. Company's production and testing of pharmaceutical grade medical marijuana and medical marijuana products will also be guided and overseen by Dr. Pierce.

Dr. Pierce received his Ph.D. in Analytical Chemistry in 1986, and has formerly owned a laboratory analysis business specializing in the analysis of herbal and botanical preparations and products. In addition, Dr. Pierce has held numerous positions in research and college level instruction specializing in laboratory practices, environmental health, quality assurance and control programs (i.e. record keeping, measuring with proper equipment, calibration of equipment, standard operating procedures, good laboratory practices, etc. are all integral components of the quality assurance and control program), and botanical intellectual property development. In his current capacity as a consultant and scientist, he currently develops innovative strategies including supercritical CO2 processing coupled with other conventional extraction techniques, in a more sophisticated fashion, that affords materials of pharmaceutical grade quality suitable for specific dosage forms in a variety of presentations ranging from topical applications to tinctures and baked goods, to name a few.

Dr. Pierce is the inventor of the following seven issued patents in the United States where the strategies aforementioned have been reduced to practice: US Patent 7,279,184 (Methods and compositions comprising Ilex); US Patent 7,105,185 (Kavalactone profile); US Patent 7,037,524 (Oral delivery of a botanical); US Patent 7,001,620 (Kavalactone product); US Patent 6,601,527 (Method of cultivating piper methysticum plants); US Patent 7,291,352 (Methods and compositions for oral delivery of Areca and mate' or theobromine); US Patent 7,029,707 (Method of producing a processed kava product having an altered kavalactone distribution and processed kava products produced using the same).

Director of Physician Education

Dr. Christopher Perez is a native of [redacted]. He received his undergraduate degree in biology at Brooklyn College. He completed an Internal Medicine internship at Staten Island University Hospital and a residency in Physical Medicine and Rehabilitation at UMDNJ-New Jersey Medical School and the Kessler Institute of Rehabilitation in West Orange New Jersey.

Dr. Perez is board certified and a Diplomat of the American Board of Physical Medicine and Rehabilitation. [redacted]. He has also been an active participant in the lecture circuit and is a speaker for Forest Laboratories. He specializes in neuropathic pain and offering patients non-invasive, non-narcotic treatment options for chronic pain patients. [redacted]

Director of Operations

Norton Arbelaez is a first-generation American whose family instilled early on the value of education and the importance of community involvement. At the University of Oklahoma, he

received a Bachelor of Arts and Sciences in International Studies Summa Cum Laude and earned a fellowship with the Carl Albert Congressional Research & Studies Center. He also interned with the Organization of American States where he compiled a database of human rights abuses as reported to the International Council of Human Rights in San Jose, Costa Rica. In 2006, Norton graduated from Tulane University Law School where he was appointed Moot Court Senior Justice and participated in the Willem C Vis International Commercial Arbitration Competition in Vienna.

After law school and having personally witnessed the personal and economic ravages of Hurricane Katrina in New Orleans, Norton represented families in their insurance claims and successfully litigated in state and federal courts in Louisiana. [redacted] He has formed part of the Colorado Department of Revenue's Medical Marijuana Advisory Board, the City of Denver's Medical Marijuana Workgroup, and Governor Hickenlooper's Amendment 64 regulatory taskforce. This involvement has permitted Norton to be directly engaged in the development and drafting of Colorado's regulatory framework and to participate in policy discussions with members of the public and private sector to promote a responsible and judicious approach to cannabis regulation. In 2010 Norton founded Colorado's Medical Marijuana Industry Group (www.mmig.org). This non-profit lobbying and policy group promotes responsible cannabis regulatory frameworks, serves a resource and partner for policy makers and protects the rights of medical marijuana patients. He currently serves on the group's Board of Directors.

Mr. Arbelaez has lectured and presented on the issues surrounding cannabis regulation at national and international forums including the National Marijuana Business Conference, the Drug Policy Alliance Biennial Conference, the Colorado Renewable Energy, Conference, and the International Conference on the Regulation of Psychotropic Substances in Bogota. He has also been featured in national and international media for his role in the development of Colorado regulatory scheme.

Director of Compliance

Sean T. McAllister is one of nation's leading marijuana lawyers. His practice focuses on all aspects of marijuana law including business transactions, regulatory compliance, civil litigation, and marijuana criminal defense matters. The Firm handles a myriad of legal issues on behalf of its marijuana industry clients all across the country, but specifically in Colorado, New York, Nevada, Oregon, Maryland, Arizona, and California.

In his role as counsel to dispensaries, he handles all aspects of corporate formation, dissolution, governance, purchase agreements, promissory notes, civil litigation and real estate matters. In addition, he has sued state and local regulators over enforcement actions, litigated pesticide standards for marijuana grows, negotiated settlements to rules violations allegations, and drafted licensing/endorsement agreements with celebrity personalities. Mr. McAllister has also represented several dispensary owners and employees charged or accused of criminal violations in state and federal court. He played integral role in assisting in the drafting of the

2012 marijuana legalization initiative Amendment 64, which was ultimately approved by the voters of Colorado in November 2012.

Mr. McAllister has litigated several groundbreaking marijuana cases in Colorado. He was co-counsel on the case suing the Colorado Department of Public Health and Environment in 2008 that overturned the original 5 patient limit. This lawsuit broke open the medical marijuana industry and led to the opening of dispensaries. He co-authored a ballot initiative in Breckenridge, Colorado that removed local penalties for the possession of small amounts of marijuana. He litigated a ban on medical marijuana dispensaries in Eagle, Colorado and authored a ballot initiative that ultimately led to the ban being overturned by a vote of the people. He has sued several cities and counties related to their implementation of the medical marijuana law.

Sean McAllister has also won several awards in the legal community in Colorado: 2007 Pro Bono Award for his work assisting victims of domestic violence;2008 Certificate of Appreciation from the People's Law Project for his pro bono defense of protesters at the 2008 Democratic National Convention; 2009 Gideon Award from Colorado Criminal Defense Bar for his dedication to the defense of the poor; 2009 Friend of Reform Award from Sensible Colorado for his efforts to legalize marijuana; 2013 MVP Award from the Cannabis Business Association for his work on behalf of the regulated marijuana industry.

Mr. McAllister is a life member of the NORML Legal Committee and the Colorado Criminal Defense Bar. From 2009-2011, he served on the states Drug Policy Task Force, a committee of the Colorado Commission on Criminal and Juvenile Justice. He was appointed co-chair of the DUID-Marijuana Sub-Committee that conducted an extensive review of drugged driving laws in 2011. From 2000 to 2003, Sean served as an Assistant Attorney General with the State of Colorado. Sean is a graduate of the University of Colorado School of Law, class of 1999.

STAFFING PROCEDURES AND POLICIES

Staffing Procedures

Citiva shall have a comprehensive plan in place for hiring the best possible candidates possible for employment while maintaining a diverse and competent workforce. We have developed a staffing plan which includes an outline of the hiring process. Below are its key elements:

- Authority must be obtained by the Executive Team to fill a position.
- Job descriptions will be created for each position and updated as necessary.
- Selection criteria will be determined based on requisite qualifications.
- Want ads will be published to attract applicants and present equal employment opportunities.
- An interview committee will be established to review applications and employ standard interview questions.
- Top candidates will be identified.
- Once a determination has been made, references will be checked.
- If an existing employee is interviewing for a new position, the employee's personnel file shall be reviewed.

- Once a finalist is selected, salary approval must be obtained by the Executive Team.
- A letter is sent to applicant confirming an employment offer.
- All hires for staff positions which will be involved in activities related to cultivation, manufacturing and dispensing of medical marijuana, as well as staff with oversight responsibilities of such activities will meet the requirements of NYCRR §1004.5(b)(18)(i)-(v).
- If the prospect is approved, they will be hired. All other candidates will be notified whether they were not selected or not.
- Any changes to the status of employment will be immediately notified to DOH.
- Citiva will collect a copy of the employee's identifying documents as required, which will be kept in the employee's confidential file.

General Hiring Policies

Citival Medical will never make any hiring decisions based whatsoever on an applicant's age, sex, race, religion, or sexual orientation. All staff of Citiva must be 21 years of age or older as of that worker's start date. Unless and until the DOH provides guidance to the contrary, this rule will be in place for all full time employees, part time employees and also unpaid interns.

All applicants who will come in contact with medical marihuana will be in compliance with §3364 of the New York Public Health Law. No applicant to such position with a job description that involves any contact whatsoever with medical marihuana and whose background check reveals to have been convicted of a felony of sale or possession of drugs, narcotics, or other controlled substances shall be hired for that position.

In the event that employees vote to bargain collectively, any number of policies in effect with HR regarding performance, discipline, staffing hours, etc. may be subject to negotiation and change. We will work collaboratively with our friends at Local 338-RWDSU/UIRCW, but the requirements to be 21 years or older and, in the case of those that come in contact with product never to have been convicted of a drug related felony are non-negotiable, governed as they are by NY State and DOH laws and regulations.

Citiva intends to have an organized corporate governance and reporting structure to operate efficiently. The Executive Team will monitor, director, and manage set company-wide goals and benchmarks and ensure patients' and community stakeholder's interests are well served.

(*Continued on next page.*)

6-Month Staffing Plan

Period Highlight: 26

Plan | Actual | % Complete | Actual (beyond plan) | % Complete (beyond plan)

POSITION	SEARCH START	HIRE DURATION	ONBOARD START	ONBOARD COMPLETE
Finance				
Controller	1	12	12	0
A/P Clerk	9	4	12	0
Cost Accountant	5	4	8	0
IT Manager	1	12	12	0
Staff Accountant	21	5	25	0
Human Resources				
HR Coordinator	5	4	8	0
Retail				
Pharmacist (4)	9	12	20	0
Disp. Mgr. / Supv. Pharmacist (	9	12	20	0
Patient Associate (24)	21	5	25	0
Maintenance (4)	21	5	25	0
Marketing & Branding				
Event Coordinator	21	5	25	0
Website Manager	21	5	25	0
Customer Service Manager	21	5	25	0
Quality				
Quality Assurance Officer	1	12	12	0
GAP Sr. Staff Member (2)	1	12	12	0
Operations (for indoor, pre go-live)				
Agriculture Engineer	1	12	12	0
Lead Cultivator	1	12	12	0
Cultivators (5)	1	12	12	0
Processing Lead	9	8	16	0
Processor	9	8	16	0
Packaging Lead	9	8	16	0
Packer	9	8	16	0
Warehouse Supervisor	9	8	16	0
Inventory Specialist	9	8	16	0
Operations (for greenhouse, post go-live))				
Agriculture Engineer	34	8	41	0
Lead Cultivator	34	8	41	0
Cultivators (10)	38	6	43	0
Processing Lead	42	5	46	0
Processor	42	5	46	0
Packaging Lead	42	5	46	0
Packer	42	5	46	0
Security				
Director of Security	1	8	8	0
Security Supervisor (5)	5	4	8	0
Security Officers (24)	5	4	8	0

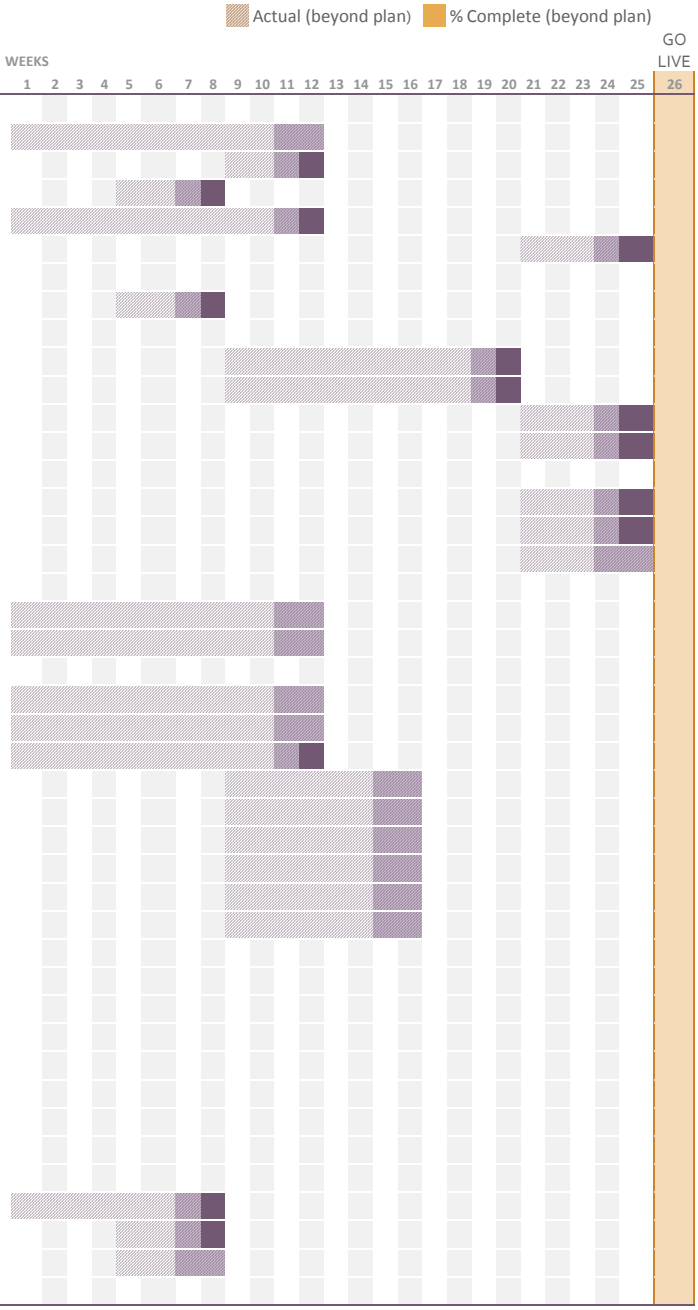

Cumulative Headcount:	12	12	12	12	12	12	12	44	44	44	44	63	63	63	63	69	69	69	69	77	77	77	77	77	109

** Twelve initial headcount include ownere/founders involved already.*

Extended Staffing Plan

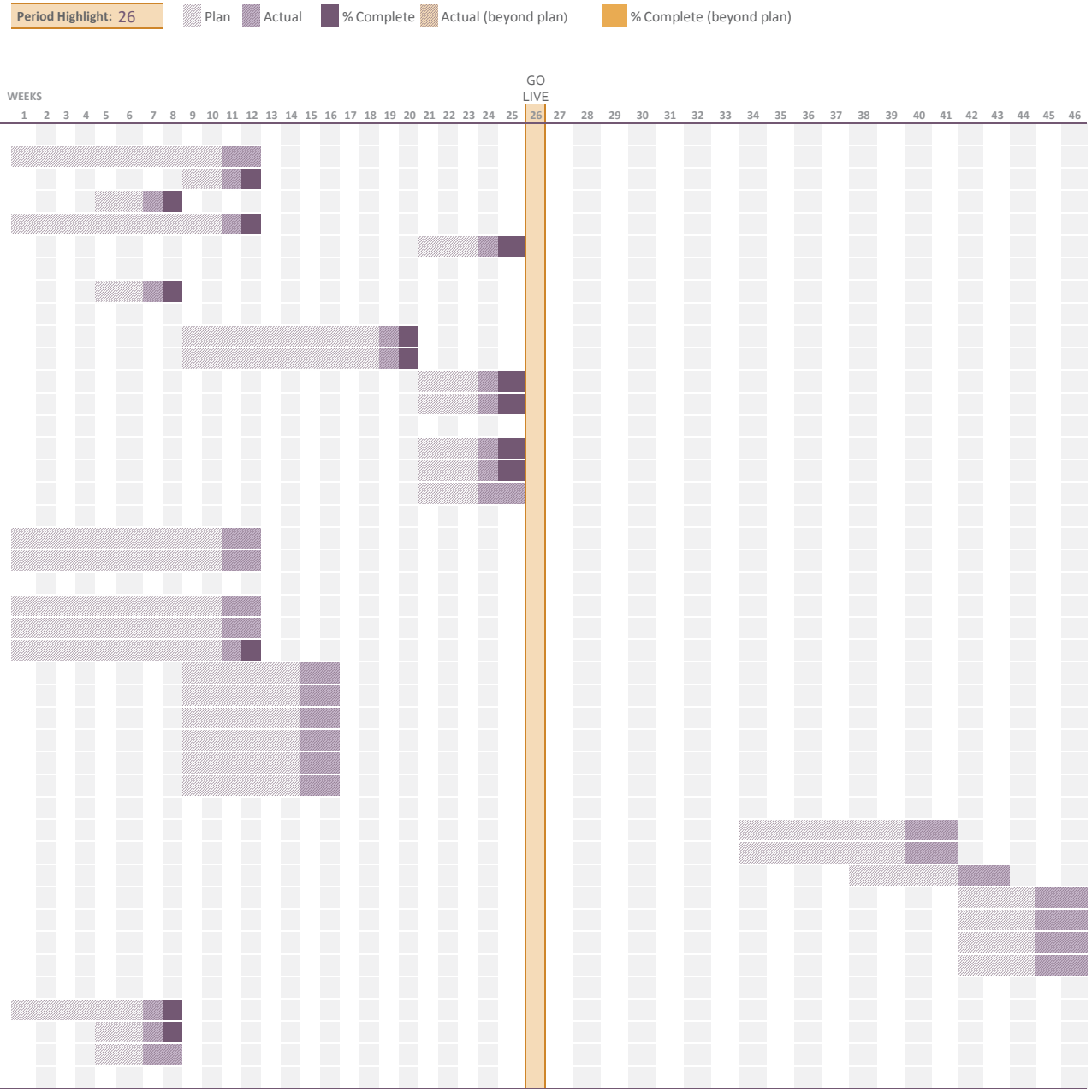

POSITION	SEARCH START	HIRE DURATION	ONBOARD START	ONBOARD COMPLETE
Finance				
Controller	1	12	12	0
A/P Clerk	9	4	12	0
Cost Accountant	5	4	8	0
IT Manager	1	12	12	0
Staff Accountant	21	5	25	0
Human Resources				
HR Coordinator	5	4	8	0
Retail				
Pharmacist (4)	9	12	20	0
Disp. Mgr. / Supv. Pharmacist (	9	12	20	0
Patient Associate (24)	21	5	25	0
Maintenance (4)	21	5	25	0
Marketing & Branding				
Event Coordinator	21	5	25	0
Website Manager	21	5	25	0
Customer Service Manager	21	5	25	0
Quality				
Quality Assurance Officer	1	12	12	0
GAP Sr. Staff Member (2)	1	12	12	0
Operations (for indoor, pre go-live)				
Agriculture Engineer	1	12	12	0
Lead Cultivator	1	12	12	0
Cultivators (5)	1	12	12	0
Processing Lead	9	8	16	0
Processor	9	8	16	0
Packaging Lead	9	8	16	0
Packer	9	8	16	0
Warehouse Supervisor	9	8	16	0
Inventory Specialist	9	8	16	0
Operations (for greenhouse, post go-live))				
Agriculture Engineer	34	8	41	0
Lead Cultivator	34	8	41	0
Cultivators (10)	38	6	43	0
Processing Lead	42	5	46	0
Processor	42	5	46	0
Packaging Lead	42	5	46	0
Packer	42	5	46	0
Security				
Director of Security	1	8	8	0
Security Supervisor (5)	5	4	8	0
Security Officers (24)	5	4	8	0

Cumulative Headcount:	12	12	12	12	12	12	44	44	44	44	63	63	63	69	69	69	69	77	77	77	77	77	109	109	109	109	109	109	109	109	109	109	109	109	109	109	117	117	141	141	141	145

** Twelve initial headcount include ownere/founders involved already.*

APPLICANT'S KNOWLEDGE OF FEDERAL LAWS

Federal Laws Relating to Marihuana

Possession, cultivation, or distribution of marijuana for any purpose is strictly illegal under federal law. Marijuana is currently classified as a Schedule I substance under the 1970 Controlled Substances Act, meaning that it meets all three of the following criteria:

- The drug or substance has a high potential for abuse.
- The drug or other substance has no currently accepted medical use in treatment in the United State.
- There is a lack of accepted safety for use of the drug or other substance under medical supervision.

Currently, only four people in the United States are authorized to possess marijuana. All are participants in the federal government's Compassionate Investigative New Drug (IND) program and are sent 300 prerolled marijuana cigarettes every month by the National Institute on Drug Abuse, ostensibly as part of a research program (although no research has ever been conducted on the participants). This program was closed in the early 1990's by President George H. Bush, but existing patients were grandfathered in. The four current participants are the only ones still alive.

The only other people authorized to possess marijuana under federal law are those who have had research studies approved by the National Institute on Drug Abuse (NIDA). Even then, the only legal source of marijuana for these studies is produced by NIDA at a research farm at the University of Mississippi. Privately cultivated marijuana may not be used in research under federal law under any circumstances.

NORML has detailed information regarding federal penalties on their website, which can be found here: http://norml.org/index.cfm?wtm_view=&Group_ID=4575. Highlights from the link are as follows:

- Possession of marijuana is punishable by up to one year in jail and a minimum fine of $1,000 for a first conviction. For a second conviction, the penalties increase to a 15-day mandatory minimum sentence with a maximum of two years in prison and a fine of up to $2,500. Subsequent convictions carry a 90-day mandatory minimum sentence and a maximum of up to three years in prison and a fine of up to $5,000.
- Distribution of a small amount of marijuana, for no remuneration, is treated as possession. Manufacture or distribution of less than 50 plants or 50 kilograms of marijuana is punishable by up to five years in prison and a fine of up to $250,000. For 50-99 plants or 50-99 kilograms the penalty increases to a possible 10 years in prison and a fine of up to $500,000. Manufacture or distribution of 100-999 plants or 100-999 kilograms carries a penalty of 5-40 years in prison and a fine of up to $2,000,000. For 1000 plants or 1000 kilograms or more, the penalty increases to 10 years - life in prison and a fine of up to $4,000,000.
- Distribution of greater than 5 grams of marijuana to a minor under the age of 21 doubles the possible penalties. Distribution within 1,000 feet of a school, playground, public housing, or within 100 feet of a youth center, public pool or video arcade also doubles the possible penalties.
- The sale of paraphernalia is punishable by up to three years in prison.
- The sentence of death can be carried out on a defendant who has been found guilty of manufacturing, importing or distributing a controlled substance if the act was committed

as part of a continuing criminal enterprise – but only if the defendant is (1) the principal administrator, organizer, or leader of the enterprise or is one of several such principal administrators, organizers, or leaders, and (2) the quantity of the controlled substance is 60,000 kilograms or more of a mixture or substance containing a detectable amount of marijuana, or 60,000 or more marijuana plants, or the if the enterprise received more than $20 million in gross receipts during any 12-month period of its existence.

Knowledge of Federal Employment and Labor Laws and Policies

Our most important resource is our employees. It is our policy to comply with all applicable laws and regulations, including those concerning hours, compensation, opportunity, human rights and working conditions. Citiva strictly prohibits discrimination or harassment against any employee because of the individual's race, color, religion, gender, sexual orientation, national origin, age, disability, veteran's status or any status protected by law.

In compliance with local laws and regulations, we prohibit the employment of people under the age of 21 in the manufacture of any product, or any component of a product, by or for any of our businesses. Forced or compulsory labor of any workers is also prohibited.

It is our policy that all employees work in a clean, orderly and safe environment. The Company requires full compliance with applicable workplace safety and industrial hygiene standards mandated by New York law.

Lastly, Citiva shall be in compliance with all applicable federal and state laws protecting the rights of persons with disabilities, including but not limited to the Americans with Disabilities Act ("ADA"), 42 U.S.C. §§12131-12134; Title 4 of NYCRR.

MAINTENANCE OF CONFIDENTIAL EMPLOYEE INFORMATION POLICY

Employee files will generally be on paper. The only information digitized will be that necessary to process payroll. So security of employee files is of a physical nature. Only the Director of HR and the HR Coordinator will have keys to the file cabinets containing the employee files. The room in which these file cabinets are located will be continuously attended. The HR Director and Coordinator, if they both leave the room, are required to lock it, providing a second physical barrier to unauthorized access to the files. Any employee may inspect his/her file, as may any in the direct reporting chain above him/her, and any manager overseeing a position to which the employee has applied. Otherwise, employee files will be strictly confidential.

WORKPLACE TRAINING REQUIREMENTS

Training will be a critical piece of our staffing plan, and will ensure that the stringent regulations, policies and procedures that we developed to ensure the security and safety of the operation, staff and cardholders are strictly adhered to. Our staff will not only learn the skills they need to perform their daily jobs, but will have the soft skills necessary to bring passion to their work and compassion to the cardholders we will serve. Each department is responsible for designing and implementing the training required for its scope. Copies of training courses successfully passed will be retained in employee files.

Individual department heads are responsible for functional-specific training in their respective areas, which of practicality will be customized somewhat depending on the relative amount and nature of experience of any particular job applicant.

However, all employees coming onboard in any department will be trained in (1) NY and federal regulations concerning marihuana and (2) good manufacturing and sanitary practices in programs designed by the Sr. GAP Staff Member. Even for employees not in positions coming into contact with the product, these broad areas are beneficial to be trained in.

ONGOING EVALUATION OF STAFF PERFORMANCE

Ongoing feedback and coaching is a key to creating a year-round performance management system as opposed to an annual event. Creating a system that keeps track of critical incidents over the entire evaluation period helps managers avoid this trap. Managers should offer employees ongoing performance feedback as soon as they can after the fact, be as specific as they can, and describe the impact of a certain action on the department or organization. This approach can strengthen the feedback's influence on future performance.

It is best to develop a system that allows the manager to let the paper documentation remember so that the manager can forget.

Keeping some type of file that tracks both positive and negative events throughout the year for each employee allows a manager to evaluate the entire 12-month period, not just the past 60 days. A manager may prefer to enter comments on the performance assessment form throughout the year, so when the time comes for the formal review, notations have already been made.

This "recentness error" is prevalent in many evaluation ratings because everyone tends to give more weight to something that happened recently.

PROGRESSIVE DISCIPLINARY PROCEDURES

Purpose

Citiva's progressive discipline procedures are designed to provide a structured corrective action process to improve and prevent a recurrence of employee misconduct, work rule violations and/or underperformance. They have been designed consistent with Citiva's organizational values and effective HR practices. Outlined below are the steps of our progressive discipline policy and a procedure for supervisors and managers to follow as a reference. Some of the factors that will be considered in determining the appropriate level of discipline, in each instance, should be: (1) whether the misconduct or performance issue has reoccurred despite coaching, counseling and/or training; (2) the employee's past work record, and; (3) the impact the misconduct and/or performance issues have Citiva's business operations. Citiva reserves the right to combine or skip steps depending upon facts of each situation and the nature of the offense. The level of disciplinary intervention may also vary.

Formal Disciplinary Measures and Related Procedures

Step 1: Formal Counseling and Verbal Warning

A formal verbal warning is generally appropriate for first-time offenses, issues that do not relate to NHMMP compliance or patient service issues, issues that the immediate supervisor considers to be relatively minor, and/or issues that s/he believes are unlikely to reoccur. Step 1 creates an opportunity for the affected employee's immediate supervisor

to schedule a meeting with an employee to bring attention to the existing performance, misconduct or attendance issue. The supervisor should discuss with the employee the nature of the problem or violation of company policies and procedures. The supervisor is expected to outline expectations and steps the employee must take to improve performance or resolve the problem. Formal verbal warnings are to be tracked using our Verbal Warning Tracking form; these forms do not need to be signed or viewed by the employee in question, though the employee may request to receive a copy. The form must be kept in the employee's personnel folder. Copies of each formal verbal warning that is documented using the Verbal Warning Tracking form should be passed along to the Dispensary Manager for Dispensary Technicians the Director of Operations for cultivation staff, and the HR Manager for all staff (including administrative staff). This should be done within 3 days of the date of the supervisor's meeting with the affected employee.

Step 2: Formal Written Warning

While it is hoped that the performance, conduct or attendance issues that were identified in Step 1 have been corrected, we recognize that this may not always be the case. A formal written warning involves a more formal documentation of performance problems, workplace misconduct or attendance issues, as well as their consequences. Formal written warnings are generally appropriate in circumstances in which an employee's misconduct is determined to be intentional, in which it reflects a pattern, where the work rule violation is related in any way to DOH non-compliance, where the misconduct implicates patient service issues, or when the misconduct or work rule violation demonstrates negligence. Please note that every work rule violation that relates to potential DOH non-compliance must result in an automatic formal written warning. Step 2 procedure requires that the affected employee meet with his or her immediate supervisor and a division manager or director, for a discussion of the specific issue, a review of any other incidents or issues, and summary of proposed corrective actions. Management will outline the consequences for the employee of his or her continued failure to meet performance and/or conduct expectations. As part of the Step 2 procedure, a formal performance improvement plan (PIP) requiring the employee's immediate and sustained corrective action may be issued. A Step 2 warning must state that the employee may be subject to additional discipline, up to and including termination, if immediate and sustained corrective action is not taken. Formal written warnings are documented using Citiva's Employee Discipline Warning Notice form. The affected employee's immediate supervisor, as well as a division manager or director is expected to meet with the employee and deliver the formal warning, giving the employee an opportunity to fill in the "Employee Comments" section. This form must be kept in the employee's personnel folder. Copies of each Employee Discipline Warning Notice should be passed along to the Dispensary Manager for Dispensary Technicians, the Director of Operations for cultivation staff, and the Director of Human Resources for all employees (including administrative employees). This should be done as soon as possible following the supervisor's meeting with the affected employee.

Step 3: Suspension and Final Written Warning

Performance, workplace misconduct, safety incidents or work rule violations may be so problematic and serious that the most effective action may be the temporary removal of the employee from the workplace. When this action is necessary as a form of corrective action, in order to complete a workplace investigation, or pending a decision whether an employee should be subject to termination, Citiva may suspend the affected employee following consultations with his or her immediate supervisor. Depending upon the seriousness of the issue, the affected employee may be suspended without pay in full-day increments consistent with federal, state and local wage-and-hour employment laws. Nonexempt/hourly employees may not substitute or use an accrued paid vacation or sick day in lieu of the unpaid suspension. Due to Fair Labor Standards Act (FLSA) compliance issues, unpaid suspension of salaried/exempt employees is reserved for serious workplace safety or conduct issues. Human Resources can provide guidance so that the discipline is administered without jeopardizing an affected employee's FLSA exemption status. When an immediate supervisor believes that an employee should receive a suspension, they should contact the Director of Human Resources. Ultimately, suspension decisions will only be made by the CEO or the CFO in consultation with the Director of Human Resources. A formal performance improvement plan (PIP) requiring the employee's immediate and sustained corrective action may be issued in conjunction with this Step 3 procedure. Suspensions are documented using Citiva's Employee Discipline Warning Notice form. The HR Manager and affected employee's immediate supervisor shall meet with the employee and deliver the formal suspension, giving the employee an opportunity to fill in the "Employee Comments" section. Step 3 suspension documentation must be accompanied by a final written warning to the affected employee that expressly states that any future misconduct/work rule violations or performance issues will result in termination of employment. The Employee Discipline Warning Notice form must be kept in the employee's personnel folder.

Step 4: Termination of Employment

The most serious step in the progressive discipline procedure is termination. Generally, Citiva will exercise the progressive nature of this procedure by providing warnings and/or suspension from the workplace before proceeding to termination. However, Citiva reserves the right to forego these steps and proceed to an immediate termination depending upon the circumstances of each situation, the nature of the misconduct, work rule violation or performance issue, and the employee's past employment record. Furthermore, employees may be terminated without any prior notice or disciplinary action. It is important to identify what misconduct or work rule violations are not typically subject to Citiva's standard progressive discipline procedures. Under some circumstances, it is important for Citiva to respond to issues consistently to demonstrate that there is zero tolerance for serious problems. Representative examples of serious problems include:

- Illegal activities on the premises (including theft of product);
- Reporting to work impaired due to being under the influence of drugs or alcohol;
- Bringing a weapon on to the premises;
- Physical or sexual assault of Patients or co-workers;
- Destruction of property;

- Purposeful conduct intended to result in NHMMP noncompliance;
- Misrepresenting facts on a resume to secure employment;
- Serious violations of Citiva's confidentiality agreement;
- Ongoing unexcused absences.

General Guidelines when Implementing Progressive Discipline

For purposes of implementing Citiva's progressive discipline procedures, the following guidelines are recommended to managers and supervisors:

- Be prepared to investigate the misconduct/work rule violation/performance issue(s) and identify relevant facts that require investigation prior to acting to implement any step(s) of progressive discipline. This may include interviewing other employees or witnesses who may know about an issue/misconduct/incident.
- Document in writing. When documenting progressive discipline, identify key information about the misconduct/violation/issue(s), the dates on which issues/incidents occurred, and any corrective action that must be taken by the employee. The manager/supervisor should also identify any action that he/she should take (e.g., identifying training that the employee may need). Managers/Supervisors are required to closely follow the documentary procedures identified above.
- Be consistent and be fair. When deciding on the level of discipline that is appropriate to the misconduct/violation/issue(s), consider Citiva's past practice and get guidance as needed. Fairness involves implementing the same step(s) of progressive discipline for the same violation. Do not hesitate to contact the HR Manager for assistance when determining the level of discipline.
- Implement the discipline promptly. Once the misconduct/violation/issue(s) has been discovered or an incident has occurred, do not delay. Promptly investigate and implement any necessary progressive discipline.
- Monitor improvement. Once progressive discipline has been implemented, continuously monitor an employee's performance and/or behavior for improvement.
- Maintain records. Any documentation relating to progressive discipline that has been implemented should be kept in a locked file in accordance with Citiva's confidentiality Standard Operating Procedures.

ATTACHMENTS: HR FORMS

CHECKLIST
DOCUMENTS – EMPLOYEES' PERSONNEL FILE

Some or all of the following documents should be maintained in an employees' personnel file.

Section 1 Forms and Items are to be turned into Human Resources Department along with this "Checklist" on or before Employee "Start Date".

Employee Name: _____
Start Date: ____ / _____ / _____

Section 1 Checklist started by: _____ on: _____

Pre-hiring

- ☐ Resume
- ☐ Employment Application
- ☐ New Hire Form which includes:
  - Position Title, Salary, Management Approval
- ☐ Documented Verification of References

Hiring Intake

- ☐ Employee Contact and Emergency Information
- ☐ I-9 Form (Employment Eligibility Verification) and Copy of Documents Verified
- ☐ Copy of a New York Driver's License or State ID
- ☐ W-4 Form
- ☐ W-4NH Form
- ☐ ADP Direct Deposit Enrollment Form with VOIDED Check Attached
- ☐ Health Insurance Forms Filled Out (even if coverage is waived)
- ☐ Medical Marijuana Registry Card
- ☐ Employee Handbook Acknowledgement Signed
  - Documentation of Training Included
- ☐ Confidentiality Policy for Employees document signed

Setup checklist					
Task	**Payroll** (EzLabor, Dir Dep., PTO, badge…)	**Email / Network Access**	**Health Ins. sent**	**Security Access**	
Date:					
By:					

Section 2 Forms or Items are to be turned into the Human Resources Department no later than <u>10 days</u> following "Start Date".

<u>Section 2</u>

- ☐ Documentation of Background Checks
- ☐ Documentation Results of Drug Tests
- ☐ Copy of Current Dispensary Registry Identification Card

Section 3 Forms or Items are to be turned into the Human Resources Department when Applicable.

<u>Section 3</u>

- ☐ Employee Change Status Form
  - o Records reflecting a change in payroll rate, change in full time/part time status, employee benefits, and other changes such as name changes, and employee separation.
- ☐ 401(k) Form (When Applicable)
- ☐ Documentation of Periodic Performance Evaluations
- ☐ Documentation of Disciplinary Actions

Section 4 Forms and Items upon Employee Separation are to be turned into the Accounting Department no later than 3 days following the <u>employees last day of hours worked.</u>

<u>Section 4</u>

- ☐ Letter of Resignation or Dismissal Notice
- ☐ Exit Interview Notes
- ☐ Passcode Key
- ☐ Company Property (keys to facilities, computers, cell phone, etc).
  - o Notify State / Health Insurance + COBRA

When applicable all following forms are to be in Employees' Personnel File

- ☐ Unemployment and Workers Compensation Documents
- ☐ Wages Attachments or Garnishment Notices

EMPLOYMENT APPLICATION **AN EQUAL OPPORTUNITY EMPLOYER**

GENERAL INFORMATION

NAME: LAST_____ FIRST_____ MIDDLE_____

ADDRESS_____ APT _____ CITY _____ STATE _____ ZIP _____

TELEPHONE NUMBER: ( ) _____ - _____

POSITION DESIRED:_____ SALARY REQUIREMENTS: _____

HAVE YOU EVER BEEN CONVICTED OF A CRIME? NO [ ] YES [ ] IF YES, EXPLAIN BELOW:

_____

_____

OTHER LANGUAGES SPOKEN:_____

HANDICAP/DISABILITY: PLEASE REVIEW THE ATTACHED JOB DESCRIPTION. ARE YOU ABLE TO PERFORM ALL THE TASKS LISTED ON THE JOB DESCRIPTION WITH ACCOMMODATION OR WITHOUT ACCOMMODATION?_____

IF YOU REQUIRE ACCOMMODATION, PLEASE SPECIFY WHAT YOU WOULD REQUIRE. _____

_____

FAILURE TO SPECIFY WILL NOT PREJUDICE YOUR APPLICATION. HOWEVER, IF YOU ARE HIRED, ACCOMMODATION ISSUES MUST BE REVIEWED BEFORE BEGINNING WORK.

EDUCATION BACKGROUND

NAME AND ADDRESS OF SCHOOL	HIGHEST GRADE COMPLETED	YEAR GRADUATED

EMPLOYMENT HISTORY - LIST IN ORDER OF LAST EMPLOYER FIRST.

DATES EMPLOYED: MO._____ YR._____ TO MO._____ YR._____

NAME OF COMPANY _____

ADDRESS _____ CITY _____ STATE _____ ZIP _____

POSITION TITLE _____ SUPERVISOR'S NAME AND TITLE_____

MAY WE CONTACT? NO [ ] YES [ ] IF YES, TELEPHONE NO. _____

REASON FOR CONSIDERING CHANGE _____

STARTING SALARY_____ FINAL GROSS SALARY _____

DATES EMPLOYED: MO._____ YR._____ TO MO._____ YR._____

NAME OF COMPANY _____

ADDRESS _____ CITY _____ STATE _____ ZIP _____

POSITION TITLE _____ SUPERVISOR'S NAME AND TITLE_____

MAY WE CONTACT? NO [ ] YES [ ] IF YES, TELEPHONE NO. _____

REASON FOR CONSIDERING CHANGE _____

STARTING SALARY_____ FINAL GROSS SALARY _____

EMPLOYMENT APPLICATION **AN EQUAL OPPORTUNITY EMPLOYER**

DATES EMPLOYED: MO._____ YR._____ TO MO._____ YR._____

NAME OF COMPANY _____

ADDRESS _____ CITY _____ STATE _____ ZIP _____

POSITION TITLE _____ SUPERVISOR'S NAME AND TITLE_____

MAY WE CONTACT? NO [ ] YES [ ] IF YES, TELEPHONE NO. _____

REASON FOR CONSIDERING CHANGE _____

STARTING SALARY_____ FINAL GROSS SALARY _____

REFERENCES - LIST THREE (3) PROFESSIONAL REFERENCES WHO ARE NOT RELATIVES

NAME	ADDRESS	TELEPHONE NUMBER	RELATION-SHIP

THE ABOVE INFORMATION IS COMPLETE AND TRUE TO THE BEST OF MY KNOWLEDGE. I UNDERSTAND THAT EVEN AFTER HIRE, DISCOVERY OF ANY MISREPRESENTATION OR OMISSION OF FACT HEREIN MAY RESULT IN MY IMMEDIATE DISMISSAL.

I AUTHORIZE ALL PERSONS, SCHOOLS, CORPORATIONS, LAW ENFORCEMENT AGENCIES AND CREDIT BUREAUS TO RELEASE ANY INFORMATION CONCERNING MY BACKGROUND, AND I HEREBY RELEASE THEM FROM ANY AND ALL CLAIMS OF LIABILITY IN LAW AND IN EQUITY THAT MAY ARISE OUT OF OBTAINING SUCH INFORMATION.

I UNDERSTAND THAT THIS STATEMENT DOES NOT CONSTITUTE AN EMPLOYMENT CONTRACT BETWEEN **NAME** AND ME, AND THAT MY EMPLOYMENT IS FOR NO FIXED DURATION AND CAN BE TERMINATED AT ANY TIME WITH OR WITHOUT NOTICE OR CAUSE FOR ANY REASON NOT OTHERWISE PROHIBITED BY LAW.

_____ _____

APPLICANT'S SIGNATURE DATE

DO NOT WRITE BELOW THIS LINE

INTERVIEWED BY:_____ DATE:_____

(CHECK AS APPLICABLE)

[ ] REJECTED
[ ] ACCEPTED PENDING BACKGROUND CHECK
[ ] REJECTED FOLLOWING BACKGROUND CHECK
[ ] FINAL ACCEPTANCE

POS:_____ WILL REP. TO:_____ SALARY/WAGE: _____

APPROVED: _____

SIGNATURE TITLE

On Boarding Form			
		Started	Completed
Name			
Cell / Home Phone Number			
Email Address			
Home Address			
DOB			
Position			
Position Location			
Full/Part Time			
Rate of Pay			
Benefit Eligible			
Verbal Offer Accepted			
Drug Test Results			
State Card			
DHHS Form			
Background Check			
Start Date			
Offer Approved			
Rate Approved			
Supervisor			

CITIVA MEDICAL LLC

MEDICAL MARIHUANA PROGRAM

ATTACHMENT K

DOCUMENTATION OF INTERNET CONNECTIVITY

Citiva Medical LLC has performed a search for internet accessibility through a third-party source[1] at its proposed sites. Based upon this search, and as documented in the information provided, Citiva Medical LLC will have internet connectivity at its Manufacturing Facility and four (4) Dispensary Facilities.

[1] www.broadbandmap.gov

National Broadband Map
How connected is my community?

5786 state route 96 romulus, ny 14541 FIND

Note: This search returned an approximate center location. For precise results, please enter a full street address and search again.
Search results returned for: **5786 New York 96, Romulus, NY 14541, USA**

Search Results: Broadband Providers for this Area

Print this page • About area • Compare Areas

Below is the **list of broadband providers operating in all or part of the census block** for the address above. If you entered a zip code or city name, the list below only displays the broadband providers offering service in the Census Block that is in the center of that zip code or city. See About and the FAQ to learn more about the data gathering process.

Help improve this data by confirming the availability and speed information. This dataset is updated approximately every six months and your input is important to us. Click **Expand All** to see details about each provider and to give us feedback.

Show All • Show Wired • Show Wireless Expand All

Advertised Speeds Above 3 Mbps Data as of: 06/30/14

Time Warner Cable Inc.	50 - 100 Mbps »
Trumansburg Telephone Co., Inc./Ontario Telephone Co., Inc.	50 - 100 Mbps »
Verizon Communications Inc.	10 - 25 Mbps »
AT&T Inc.	10 - 25 Mbps »
ViaSat, Inc.	10 - 25 Mbps »
	10 - 25 Mbps »

Advertised Speeds Above 768 kbps and Below 3 Mbps Data as of: 06/30/14

Spacenet Inc.	768 kbps - 1.5 Mbps

Most Common Speed: 10 Mbps

Data Source • Download • API Call

Broadband services delivered via satellite are available to U.S. customers throughout all 50 States. Please click here for more information on individual Satellite Broadband service providers

Is your broadband provider listed? If not, please enter the provider below

SEND

The list above only displays the broadband providers offering service in the Census Block that is in the center of your search results. The results do not display a summary of the search area, only the center of the search. For example, if you search for a city name only, then the search would return the approximate center of that city and only the information in the Census Block at the center of the city would be displayed.

Search Examples

148 Lafayette Street, New York, NY 10013
2017 Mission Street, San Francisco, CA 94110
1370 Willow Road, Menlo Park, CA 94025
21 Overhill Street, Lumberport, WV 26386

Share »

Share this page with my community

Short URL »

Tweet

Like 0

Map »

Map my community

Rank »

Rank my community

Summarize »

View statistics about my community

Provider »

View statistics about providers

Broadband Classroom »

Learn more about broadband

Engage »

Build a better map for my community

Blog »

National Broadband Map has Helped Chart Broadband Evolution
posted by Anne Neville on March 23, 2015

Updates »

Sign up and receive updates about the National Broadband Map

Tweet

The **National Broadband Map** is a tool to search, analyze and map broadband availability across the United States.
Created and maintained by the **NTIA**, in collaboration with the **FCC**, and in partnership with 50 states, five territories and the District of Columbia.

National Broadband Map
How connected is my community?

5788 east circle drive cicero, ny 13039 FIND

Search Results: Broadband Providers for this Area

Print this page • About area • Compare Areas

Below is the **list of broadband providers operating in all or part of the census block** for the address above. If you entered a zip code or city name, the list below only displays the broadband providers offering service in the Census Block that is in the center of that zip code or city. See About and the FAQ to learn more about the data gathering process.

Help improve this data by confirming the availability and speed information. This dataset is updated approximately every six months and your input is important to us. Click **Expand All** to see details about each provider and to give us feedback.

Show All • Show Wired • Show Wireless Expand All

Advertised Speeds Above 3 Mbps Data as of: 06/30/14

Verizon Communications Inc.	100 Mbps - 1 Gbps »
Time Warner Cable Inc.	50 - 100 Mbps »
Call Rich	50 - 100 Mbps »
AT&T Inc.	10 - 25 Mbps »
T-Mobile	10 - 25 Mbps »
ViaSat, Inc.	10 - 25 Mbps »
	10 - 25 Mbps »
Sprint Nextel Corporation	6 - 10 Mbps

Advertised Speeds Above 768 kbps and Below 3 Mbps Data as of: 06/30/14

Spacenet Inc.	768 kbps - 1.5 Mbps

Most Common Speed: 10 Mbps

Data Source • Download • API Call

Broadband services delivered via satellite are available to U.S. customers throughout all 50 States. Please click here for more information on individual Satellite Broadband service providers

Is your broadband provider listed? If not, please enter the provider below

SEND

The list above only displays the broadband providers offering service in the Census Block that is in the center of your search results. The results do not display a summary of the search area, only the center of the search. For example, if you search for a city name only, then the search would return the approximate center of that city and only the information in the Census Block at the center of the city would be displayed.

Search Examples

148 Lafayette Street, New York, NY 10013
2017 Mission Street, San Francisco, CA 94110
1370 Willow Road, Menlo Park, CA 94025
21 Overhill Street, Lumberport, WV 26386

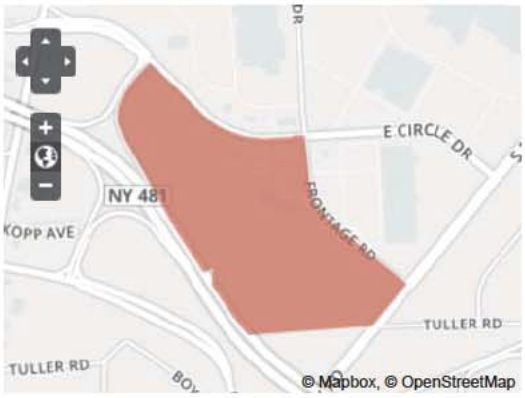

Share »

Share this page with my community

Short URL »

Tweet

Like 0

Map »

Map my community

Rank »

Rank my community

Summarize »

View statistics about my community

Provider »

View statistics about providers

Broadband Classroom »

Learn more about broadband

Engage »

Build a better map for my community

Blog »

National Broadband Map has Helped Chart Broadband Evolution
posted by Anne Neville on March 23, 2015

Updates »

Sign up and receive updates about the National Broadband Map

Tweet

The **National Broadband Map** is a tool to search, analyze and map broadband availability across the United States.
Created and maintained by the **NTIA**, in collaboration with the **FCC**, and in partnership with 50 states, five territories and the District of Columbia.

National Broadband Map
How connected is my community?

2290 south rd, poughkeepsie, ny 12601 FIND

Search Results: Broadband Providers for this Area

Print this page • About area • Compare Areas

Below is the **list of broadband providers operating in all or part of the census block** for the address above. If you entered a zip code or city name, the list below only displays the broadband providers offering service in the Census Block that is in the center of that zip code or city. See About and the FAQ to learn more about the data gathering process.

Help improve this data by confirming the availability and speed information. This dataset is updated approximately every six months and your input is important to us. Click **Expand All** to see details about each provider and to give us feedback.

Show All • Show Wired • Show Wireless Expand All

Advertised Speeds Above 3 Mbps Data as of: 06/30/14

Level 3 Communications, LLC	1 Gbps+ »
Verizon Communications Inc.	100 Mbps - 1 Gbps »
CSC Holdings	100 Mbps - 1 Gbps »
AT&T Inc.	10 - 25 Mbps »
ViaSat, Inc.	10 - 25 Mbps »
	10 - 25 Mbps »

Advertised Speeds Above 768 kbps and Below 3 Mbps Data as of: 06/30/14

T-Mobile	1.5 - 3 Mbps
Spacenet Inc.	768 kbps - 1.5 Mbps
Sprint Nextel Corporation	768 kbps - 1.5 Mbps

Most Common Speed: 10 Mbps

Data Source • Download • API Call

Broadband services delivered via satellite are available to U.S. customers throughout all 50 States. Please click here for more information on individual Satellite Broadband service providers

Is your broadband provider listed? If not, please enter the provider below

SEND

The list above only displays the broadband providers offering service in the Census Block that is in the center of your search results. The results do not display a summary of the search area, only the center of the search. For example, if you search for a city name only, then the search would return the approximate center of that city and only the information in the Census Block at the center of the city would be displayed.

Search Examples

148 Lafayette Street, New York, NY 10013
2017 Mission Street, San Francisco, CA 94110
1370 Willow Road, Menlo Park, CA 94025
21 Overhill Street, Lumberport, WV 26386

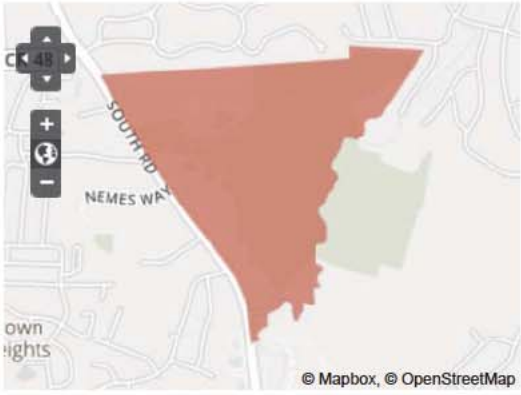

Share »

Share this page with my community

Short URL »

Tweet

Like 0

Map »

Map my community

Rank »

Rank my community

Summarize »

View statistics about my community

Provider »

View statistics about providers

Broadband Classroom »

Learn more about broadband

Engage »

Build a better map for my community

Blog »

National Broadband Map has Helped Chart Broadband Evolution
posted by Anne Neville on March 23, 2015

Updates »

Sign up and receive updates about the National Broadband Map

Tweet

The **National Broadband Map** is a tool to search, analyze and map broadband availability across the United States.
Created and maintained by the **NTIA**, in collaboration with the **FCC**, and in partnership with 50 states, five territories and the District of Columbia.

National Broadband Map
How connected is my community?

1279 chili ave, rochester, ny 14624 FIND

Search Results: Broadband Providers for this Area

Print this page • About area • Compare Areas

Below is the **list of broadband providers operating in all or part of the census block** for the address above. If you entered a zip code or city name, the list below only displays the broadband providers offering service in the Census Block that is in the center of that zip code or city. See About and the FAQ to learn more about the data gathering process.

Help improve this data by confirming the availability and speed information. This dataset is updated approximately every six months and your input is important to us. Click **Expand All** to see details about each provider and to give us feedback.

Show All • Show Wired • Show Wireless Expand All

Advertised Speeds Above 3 Mbps Data as of: 06/30/14

Fibertech Networks, LLC	100 Mbps - 1 Gbps
Time Warner Cable Inc.	50 - 100 Mbps
Frontier Communications Corporation	25 - 50 Mbps
Verizon Communications Inc.	10 - 25 Mbps
AT&T Inc.	10 - 25 Mbps
T-Mobile	10 - 25 Mbps
ViaSat, Inc.	10 - 25 Mbps
	10 - 25 Mbps
Sprint Nextel Corporation	6 - 10 Mbps

Advertised Speeds Above 768 kbps and Below 3 Mbps Data as of: 06/30/14

Spacenet Inc.	768 kbps - 1.5 Mbps

Most Common Speed: 10 Mbps Data Source • Download • API Call

Broadband services delivered via satellite are available to U.S. customers throughout all 50 States. Please click here for more information on individual Satellite Broadband service providers

Is your broadband provider listed? If not, please enter the provider below

SEND

The list above only displays the broadband providers offering service in the Census Block that is in the center of your search results. The results do not display a summary of the search area, only the center of the search. For example, if you search for a city name only, then the search would return the approximate center of that city and only the information in the Census Block at the center of the city would be displayed.

Search Examples

148 Lafayette Street, New York, NY 10013
2017 Mission Street, San Francisco, CA 94110
1370 Willow Road, Menlo Park, CA 94025
P.O. Overhill Street, Lumberport, WV 26386

Share »

Share this page with my community

Short URL »

Tweet

Like 0

Map »

Map my community

Rank »

Rank my community

Summarize »

View statistics about my community

Provider »

View statistics about providers

Broadband Classroom »

Learn more about broadband

Engage »

Build a better map for my community

Blog »

National Broadband Map has Helped Chart Broadband Evolution
posted by Anne Neville on March 23, 2015

Updates »

Sign up and receive updates about the National Broadband Map

Like 0

results: 6.81 seconds

Tweet

The **National Broadband Map** is a tool to search, analyze and map broadband availability across the United States.
Created and maintained by the **NTIA**, in collaboration with the **FCC**, and in partnership with 50 states, five territories and the District of Columbia.

NTIA • FCC • Website Policies and Notices • Privacy Policy • Recovery.gov • FOIA

35 1st ave, new york, ny 10003 FIND

Search Results: Broadband Providers for this Area

Print this page • About area • Compare Areas

Below is the **list of broadband providers operating in all or part of the census block** for the address above. If you entered a zip code or city name, the list below only displays the broadband providers offering service in the Census Block that is in the center of that zip code or city. See About and the FAQ to learn more about the data gathering process.

Help improve this data by confirming the availability and speed information. This dataset is updated approximately every six months and your input is important to us. Click **Expand All** to see details about each provider and to give us feedback.

© Mapbox, © OpenStreetMap

Show All • Show Wired • Show Wireless Expand All

Advertised Speeds Above 3 Mbps Data as of: 06/30/14

Time Warner Cable Inc.	50 - 100 Mbps
Platinum Equity, LLC	25 - 50 Mbps
Verizon Communications Inc.	10 - 25 Mbps
AT&T Inc.	10 - 25 Mbps
T-Mobile	10 - 25 Mbps
ViaSat, Inc.	10 - 25 Mbps
Business Only Broadband, LLC	10 - 25 Mbps
	10 - 25 Mbps
Sprint Nextel Corporation	10 - 25 Mbps

Advertised Speeds Above 768 kbps and Below 3 Mbps Data as of: 06/30/14

Spacenet Inc.	768 kbps - 1.5 Mbps

Most Common Speed: 10 Mbps Data Source • Download • API Call

Broadband services delivered via satellite are available to U.S. customers throughout all 50 States. Please click here for more information on individual Satellite Broadband service providers

Is your broadband provider listed? If not, please enter the provider below

SEND

The list above only displays the broadband providers offering service in the Census Block that is in the center of your search results. The results do not display a summary of the search area, only the center of the search. For example, if you search for a city name only, then the search would return the approximate center of that city and only the information in the Census Block at the center of the city would be displayed.

Search Examples

148 Lafayette Street, New York, NY 10013
2017 Mission Street, San Francisco, CA 94110
1370 Willow Road, Menlo Park, CA 94025
21 Overhill Street, Lumberport, WV 26386

Share »

Share this page with my community

Short URL »

Tweet

Map »

Map my community

Rank »

Rank my community

Summarize »

View statistics about my community

Provider »

View statistics about providers

Broadband Classroom »

Learn more about broadband

Engage »

Build a better map for my community

Blog »

National Broadband Map has Helped Chart Broadband Evolution
posted by Anne Neville on March 23, 2015

Updates »

Sign up and receive updates about the National Broadband Map

results: 9.87 seconds

Tweet

The **National Broadband Map** is a tool to search, analyze and map broadband availability across the United States.
Created and maintained by the **NTIA**, in collaboration with the **FCC**, and in partnership with 50 states, five territories and the District of Columbia.

NTIA • FCC • Website Policies and Notices • Privacy Policy • Recovery.gov • FOIA

Citiva Medical conducted a due diligence review of available internet service providers (ISPs) offering broadband internet services within the locality of each planned Citiva facility. For this review, Citiva evaluated ISPs based on their backbone network connectivity to the Internet (tier level), service level options for customers and the network topology utilized to connect subscribers to central office hubs. Citiva utilized The National Broadband Map[1] (NBM), an independent, government sanctioned resource, to identify ISP's currently offering broadband Internet services to each Citiva facility.

As a result of its due diligence market review, Citiva Medical's identified several ISPs offering broadband Internet connectivity to the street address of each planned facility. Following are the findings of Citiva Medical's ISP market review:

Facility	Street Address	ISP	Services Provided
Dispensary 1	5788 East Circle Drive Cicero, NY 13039	AT&T	Business class wired, wireless @ 10-25 Mbps.
		T-Mobile	Business class wireless @ 10-25 Mbps.
		Time Warner Cable Inc.	Business class cable @ 50-100Mbps.
		Verizon Communications Inc.	Business class fiber optic, wired, wireless @ 100 -1000 Mbps.
Dispensary 2	4 Hinchey Road Rochester, NY 14624	Fibertech Networks, LLC	Business class fiber optic @ 100-1000 Mbps.
		Frontier Communications Corporation	Business class cable @ 25-50 Mbps.
		Verizon Communications Inc.	Business class wireless @ 10-25 Mbps.
Dispensary 3	2290 South Rd Poughkeepsie, NY 12601	CSC Holdings	Business class cable @ 100-1000 Mbps.
		Level 3 Communications, LLC	Business class fiber optic @ 1 Gbps. +
		Verizon Communications Inc.	Business class fiber optic, wired, wireless @ 100 -1000 Mbps.

[1] The National Telecommunications and Information Administration (NTIA) created the NBM, in collaboration with the Federal Communications Commission (FCC), and in partnership with 50 states, five territories and the District of Columbia. The NBM is part of NTIA's State Broadband Initiative. The NBM is updated approximately every six months and was first published on February 17, 2011.

Facility	Street Address	ISP	Services Provided
Dispensary 4	35 1st Ave New York, NY	Business Only Broadband, LLC	Business class wired @ 10 - 25 Mbps.
		T-Mobile	Business class wireless @ 10-25.
		Time Warner Cable Inc.	Business class cable @ 50-100Mbps.
		Verizon Communications Inc.	Business class fiber optic, wired, wireless @ 10-25 Mbps.
Processing/Manufacturing	5786 State Route 96 Romulus, NY 14541	AT&T	Business class wired, wireless @ 10-25 Mbps.
		Time Warner Cable Inc.	Business class cable @ 50-100Mbps.
		Trumansburg Telephone Co., Inc./Ontario Telephone Co., Inc.	Business class wired @ 50 - 100 Mbps.
		Verizon Communications Inc.	Business class fiber optic, wired, wireless @ 10-25 Mbps.

CITIVA MEDICAL LLC

MEDICAL MARIHUANA PROGRAM

ATTACHMENT L

PROJECT TIMELINE

The enclosed project timeline documents the ability of Citiva Medical LLC to implement its proposed project and meet the January 1, 2016 milestone to begin serving registered patients at its four (4) Dispensary Facilities. Please note that Citiva Medical LLC intends to begin operations using an indoor growing facility in order to meet this milestone. Furthermore, in 2016, Citiva Medical LLC will construct a greenhouse that will support the expansion of its operations.

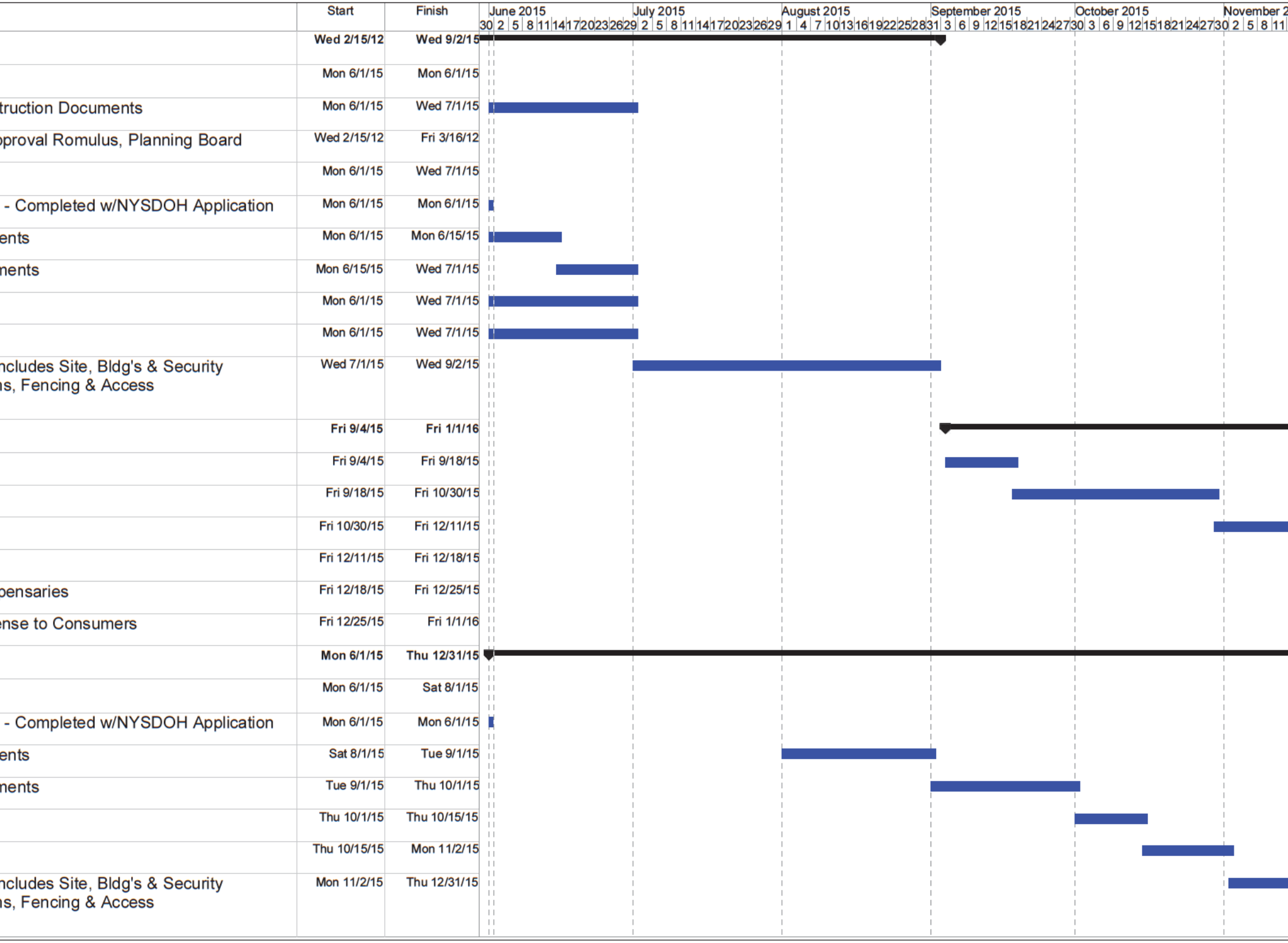
Start
Finish
June 2015
July 2015
August 2015
September 2015
October 2015
November 2
30 2 5 8 11 14 17 20 23 26 29 2 5 8 11 14 17 20 23 26 29 1 4 7 10 13 16 19 22 25 28 31 3 6 9 12 15 18 21 24 27 30 3 6 9 12 15 18 21 24 27 30 2 5 8 11
Wed 2/15/12 Wed 9/2/15
Mon 6/1/15 Mon 6/1/15
truction Documents Mon 6/1/15 Wed 7/1/15
pproval Romulus, Planning Board Wed 2/15/12 Fri 3/16/12
Mon 6/1/15 Wed 7/1/15
- Completed w/NYSDOH Application Mon 6/1/15 Mon 6/1/15
ents Mon 6/1/15 Mon 6/15/15
ments Mon 6/15/15 Wed 7/1/15
Mon 6/1/15 Wed 7/1/15
Mon 6/1/15 Wed 7/1/15
ncludes Site, Bldg's & Security
ns, Fencing & Access Wed 7/1/15 Wed 9/2/15
Fri 9/4/15 Fri 1/1/16
Fri 9/4/15 Fri 9/18/15
Fri 9/18/15 Fri 10/30/15
Fri 10/30/15 Fri 12/11/15
Fri 12/11/15 Fri 12/18/15
pensaries Fri 12/18/15 Fri 12/25/15
ense to Consumers Fri 12/25/15 Fri 1/1/16
Mon 6/1/15 Thu 12/31/15
Mon 6/1/15 Sat 8/1/15
- Completed w/NYSDOH Application Mon 6/1/15 Mon 6/1/15
ents Sat 8/1/15 Tue 9/1/15
ments Tue 9/1/15 Thu 10/1/15
Thu 10/1/15 Thu 10/15/15
Thu 10/15/15 Mon 11/2/15
ncludes Site, Bldg's & Security
ns, Fencing & Access Mon 11/2/15 Thu 12/31/15
Project Summary
Inactive Summary
Manual Summary
External Milestone

CITIVA MEDICAL LLC

MEDICAL MARIHUANA PROGRAM

ATTACHMENT M

COMPLIANCE WITH LAWS AND REGULATIONS (LETTER)

AND

ADDITIONAL SUPPORTING DOCUMENTS (SEE ENCLOSED LIST)

CITIVA MEDICAL

6/1/15

New York State Department of Health
Bureau of Narcotic Enforcement
Medical Marijuana Program
150 Broadway
Albany, New York 12204

RE: CITIVA MEDICAL LLC – COMPLIANCE STATEMENT

To Whom It May Concern:

Citiva Medical LLC (Citiva Medical) is an existing New York State Limited Liability Company that is submitting an Application for Registration as a Registered Organization through the Medical Marihuana Program to the New York State Department of Health that seeks approval to become a Registered Organization under Section 3365 of the New York Public Health Law. To this end, Citiva Medical will comply with all applicable State and local laws and regulations, including, but not limited to, the Compassionate Care Act and Part 1004 of 10 New York Codes, Rules and Regulations. Citiva Medical believes that the various components of its Application document its ability to fully comply with such laws and regulations.

Thank you for your attention to this matter.

Sincerely,

Joshua Stanley - CEO
Citiva Medical, LLC

CITIVA MEDICAL LLC

ADDITIONAL SUPPORTING DOCUMENTS

The enclosed support letters document Citiva Medical LLC's ability to comply with all applicable State and local laws and regulations for the activities in which it intends to engage under the registration.

1. Advisory Board Information (List of Board and Biographies)

2. Support Letters
    a. BioTrackTHC – the NYSDOH-selected vendor for "Seed-to-Sale" software tracking solution
    b. Cannabics Pharmaceuticals Inc. – Memorandum of Understanding
    c. Medication Management Research Network
    d. BESTMSLs – a medical affairs organization providing medical education to healthcare practitioners
    e. Municipality Support Letters – Town of Romulus (with Zoning Permit), Seneca Chamber of Commerce, Town of Gates, Town of Cicero, Town of Poughkeepsie, County of Dutchess
    f. Partnership for Economic Development in Sullivan County
    g. University of Rochester Medical Center
    h. The University of the West Indies – Memorandum of Understanding
    i. The Center for Discovery, Inc.
    j. Staci A. Gruber, Ph.D., Associate Professor of Psychiatry, Harvard Medical School
    k. Personal Support Letter #1
    l. Personal Support Letter #2

3. Support Petitions

Citiva Medical Advisory Board

The Citiva Medical Advisory Board is comprised of eight prominent figures with a wide array of backgrounds including: medicine, government, law enforcement and security, business and clergy. The Board is responsible for advising Citiva Medical on issues relevant to their expertise, identifying and creating new business opportunities and industry relationship building.

The Board will meet three times per year. Members will receive a stipend.

Citiva Medical Advisory Board Members:

- **J. Patrick Barrett,** [redacted]
- **Patrick Dollard,** [redacted]
- **Christine Emerson,** [redacted]
- **Melissa Hilt,** [redacted]
- **Joseph J. Lhota,** [redacted]
- **James M. McGuire,** [redacted]
- **John Poklemba,** Former Director of Criminal Justice and Governor's Chief Criminal Justice Advisor
- **The Reverend Dr. W. Franklyn Richardson,** [redacted]

Board Member Biographies

J. Patrick Barrett

J. Patrick Barrett — "Pat" to all who know him — [redacted] He is also Chairman of the Board of Directors of the Whiteface Club Companies and the Olympic Regional Development Authority, both headquartered in Lake Placid, New York. He also serves on the Board of Directors of Adirondack Bank, headquartered in Utica, New York. [redacted]

Earlier in his business career, Barrett was [redacted]

Barrett [redacted]

Barrett is the [redacted]

Barrett serves as a Trustee Emeritus of Syracuse University. In addition, he is the former Chairman of the New York State Ad Hoc Committee on the Future of Racing.

In 1987, Barrett was appointed by President Ronald Reagan as a member of the President's Board of Advisors on Private Sector Initiatives. At President Reagan's request, he also chaired the Vote America Program.

Barrett served as a Delegate to the 1988 and 2004 Republican National Conventions. In 1989, he was elected Chairman of the New York Republican State Committee, a post he held until 1991.

In 2010, he served as Co-Chair of Andrew Cuomo 2010, the current New York Governor's campaign committee.

Pat Barrett was born on [redacted], in [redacted] New York. He was one of [redacted] of the [redacted] graduating class of [redacted]. In 1959, he earned a Bachelor of Science degree in Economics from Siena College in Loudonville, New York.

[redacted]. He makes his home in [redacted]

Patrick H. Dollard

[redacted] As a nationally recognized thought leader, Mr. Dollard is one of the field's most innovative visionaries in the development of new models of cost-effective high quality care for special populations. He regularly presents at national and international conferences including The Kresge Foundation, Health Care Without Harm, United Cerebral Palsy and the Autism Roundtable, among others.

Redacted pursuant to N.Y. Public Officers Law, Art.6

[redacted] He holds a Masters in Special Education from Long Island University and a B.S. in Adapted Physical Education from the State University of New York – Brockport. Citing his distinguished accomplishments in the field and international reputation, the SUNY system awarded him an Honorary Doctorate of Humane Letters in May 2013.

Christine Emerson, PNP-BC

Christine was raised in [redacted] New York. She received her undergraduate degree at St. John Fisher College. She was a [redacted]

Christine later attended the University of Rochester where she received her Master's degree as a Pediatric Nurse Practitioner. Upon completion of her degree [redacted]

Christine also organized a mission trip to South America for a team of 21 medical professionals to perform cleft lip and palate surgery to underserved children. She has presented several times at the International Cleft and Craniofacial conference as well as at local forums. Christine has as co-authored several papers on craniofacial treatments.

[redacted]

Melissa Hilt

Melissa Hilt is a [redacted]. Melissa has a degree in applied sciences from Hudson Valley Community College as well as multiple continuing education courses in rehabilitation, education and public speaking. She earned her registered nursing license in 1999 after passing the New York state NCLEX exam.

[redacted]. Melissa has worked with the National epilepsy foundation in fundraising efforts to increase epilepsy awareness and improve research into possible treatments for these rare forms of epilepsy. Working with [redacted], Melissa assisted in the development of the NYS rare disease alliance. She [redacted] have also participated in multiple studies to help learn as much as possible about [redacted] illness. After [redacted], meeting with and learning from various neurologists at Albany medical center pediatric neurology and Boston Children's hospital as well as geneticists and nutritionists at Boston children's hospital and trials of various antiepileptic treatments, Melissa became interested in the medicinal benefits of marijuana. Melissa reviewed what she had learned from lectures with epileptic specialists at Albany medical center and Boston children's hospital to gain further insight into the neurological benefits of marijuana. In January of 2014 Melissa began meeting with various members of the state legislature sharing her knowledge and teaching the legislature of the benefits of marijuana and the [redacted]. Melissa actively worked with [redacted] parents and advocates to assist in passage of the New York state Compassionate Care act in June 2014.

[redacted]. Melissa's motivating force in life is [redacted] as it is up to those of us who can to do.

Joseph J. Lhota
Senior Vice President, Vice Dean, and Chief of Staff
NYU Langone Medical Center

Redacted Pursuant to N.Y. Public Officers Law, Art. 6

brings more than 35 years of managerial and policy-making experience to the position.

Mr. Lhota was a candidate for Mayor of the City of New York in 2013.
In 2011 -2012, Mr. Lhota served as [redacted]
before resigning to run for Mayor of New York City.

Redacted Pursuant to N.Y. Public Officers Law, Art. 6

Mr. Lhota was an integral part of Mayor Rudolph W. Giuliani's core management team in New York City. From 1998 to 2001, he served as Deputy Mayor for Operations, overseeing the day-to-day management of the City government. Prior to this, he was the City's Budget Director with responsibility for managing the City's multi-billion dollar operating and capital budgets. He also served as Commissioner of Finance for New York City.

Preceding his municipal service, Mr. Lhota spent 14 years in investment banking, where he specialized in public finance, serving state and local governments throughout the United States.
Mr. Lhota graduated cum laude from Georgetown University and the Harvard Business School. He serves as a trustee of the City University of New York and is a board member of Cablevision Systems Corporation (CVC), where he serves as chairman of the Audit Committee, and First Aviation Services, Inc. (FAVS).

James M. McGuire

James M. McGuire focuses his practice on complex commercial litigation, including sophisticated business disputes, white collar and securities litigation and regulatory matters.

Redacted Pursuant to N.Y. Public Officers Law, Art. 6

In addition, Mr. McGuire has litigated appeals before New York State appellate courts, including the New York State Court of Appeals; he also has served as an arbitrator in an International Chamber of Commerce arbitration and as a mediator in connection with two actions filed in the United States District Court for the Southern District of New York.

Mr. McGuire has served in a variety of roles in state government, including most recently as an Associate Justice in the First Judicial Department of New York State's Appellate Division and as a Justice in the 11th Judicial District for the Supreme Court of the State of New York.

Mr. McGuire also previously served as Chief Counsel to New York State Governor George E. Pataki. His responsibilities included advising the Governor on all pending legislation, litigation and legal issues affecting the day-to-day operations of the state, and supervising the drafting of all legislation proposed by the Governor.

He also advised the Governor on all legal issues arising out of the 9/11 terrorist attacks, and initiated and supervised landmark litigation between the Governor and the Legislature over their respective constitutional roles in the budget process. Before serving as Chief Counsel, Mr. McGuire served as First Assistant Counsel to the Governor, where his responsibilities included advising the Governor on criminal justice legislation and legal matters relating both to executive branch agencies with criminal justice responsibilities and to the Judiciary.

In addition, Mr. McGuire served as the Deputy Chief Counsel of the Appeals Bureau of the New York County District Attorney's Office, where he argued and supervised appeals before state and federal appellate courts; as Senior Investigative Counsel in the Rackets Bureau, he conducted and supervised investigations and trials involving official corruption and organized crime. As Deputy Counsel to the New York State Commission on Government Integrity, a gubernatorial commission established to investigate matters relating to government integrity and recommend reforms, he conducted and supervised investigations and handled litigation brought by and against the commission.

Education
Fordham University, B.A., 1975, magna cum laude
Cornell University Law School, J.D., 1980, cum laude

Court Admissions
United States Court of Appeals for the Second Circuit
United States District Court for the Eastern District of New York
United States District Court for the Southern District of New York

Bar Admissions/Qualifications
New York

Memberships
The Chief Judge's Task Force on Commercial Litigation in the 21st Century

John Poklemba

[redacted]

Upon graduation with honors from St. John's University School of Law, Mr. Poklemba began his legal career in 1975 as Law Secretary in the New York State Supreme Court. He then served as Deputy Counsel in the Office of Court Administration from 1977 to 1981 and as Chief Appellate Law Assistant, New York State Appellate Division, Fourth Department, from 1981-1984.

In February 1984, John was appointed Chief Counsel to the Governor's Director of Criminal Justice. In this capacity, he was responsible for all legal duties involved in supervising and coordinating the eight New York State Criminal Justice Agencies.

In December 1987, Governor Mario Cuomo appointed John to the twin posts of New York State Director of Criminal Justice and Commissioner of the Division of Criminal Justice Services. In the latter office, he supervised the State's Criminal Justice Information and Planning Agency.

As Director of Criminal Justice, he served as the Governor's Chief Criminal Justice Advisor and as the State's primary spokesperson and policy maker in the criminal justice field. Among his most important accomplishments were the passage of the Organized Crime Control Act, the development of comprehensive drug enforcement through the Statewide Drug Enforcement Task Force, and nationally recognized technological advances such as the Statewide Criminal Justice Data Communications Network and the Statewide Automated Fingerprint Identification System. In addition to his work in law enforcement, Mr. Poklemba was a leader in modern correctional innovation. His major initiatives included the Shock Incarceration Program, the Earned Eligibility Program, and the establishment of five comprehensive alcohol and substance abuse treatment facilities.

Mr. Poklemba moved into private law practice in [redacted], [redacted] In 1992, he was appointed Chairman of the Governor's Judicial Screening Committee for the Third Judicial Department and a member of the New York State University at Albany Council. In 2003, he was appointed by Governor George Pataki as a member of the Statewide Emergency Communications Committee. He also served as Legislative Counsel to the New York City Patrolmen's Benevolent Association, the New York State Association of Chiefs of Police, and the New York City Deputy Sheriffs Association. On February 1, 2013, Mr. Poklemba was appointed by Governor Andrew Cuomo as a member of the newly created New York State Gaming Commission. [redacted]

The Reverend Dr. W. Franklyn Richardson

[redacted] A graduate of Virginia Union University, Dr. Richardson received his Divinity degree from Yale University Divinity School and his Doctorate of Ministry as a Wyatt Tee Walker Fellow from the United Theological Seminary in Dayton, Ohio. Dr. Richardson has received extensive recognition for his dynamic and impactful leadership in ministry with Honorary Doctor of Divinity degrees from several colleges and universities including his alma mater, Virginia Union University.

In 1989, Dr. Richardson was inducted into the Martin Luther King, Jr., Board of Preachers at Morehouse College in Atlanta, Georgia. His tireless efforts to defend and promote justice, fairness, and equality for all people were recognized in 2013, when Morehouse paid tribute to Dr. Richardson once again by inducting him into its International Hall of Honor. Established to celebrate extraordinary persons of the twentieth and twenty-first centuries who have made significant contributions to the global nonviolent movement for civil and human rights, Dr. Richardson's portrait now resides in the Martin Luther King Jr. International Chapel, alongside images of the greatest leaders of the modern era.

A longtime community builder and organizer, Dr. Richardson has played a pivotal role in the grass root efforts of reestablishing a cultural bridge between community and education. He is singularly responsible for leveling the ground by fighting for equitable opportunities in public education in the Mount Vernon community and he has manned the front lines in the battle for just and affordable housing development. His steadfast efforts have

resulted two Grace Church related Community Development Corporations which have constructed more than 100 million dollars in affordable housing to date.

[redacted]., which thrust him into the international arena of the World Council of Churches where he served on its prestigious Central Committee. The World Council represents more than 400 million Christians in 150 nations. He also served on the boards of the Congress of the National Black Churches, the National Urban League, and the Constituency for Africa. A life member of the National Association for the Advancement of Colored People, Dr. Richardson is also a member of the Sigma Pi Phi Fraternity.

This distinguished theologian is an internationally sought after preacher, lecturer and facilitator, having preached on several continents. For the past thirty years, he has been heard throughout the tri-state area on WVOX radio and is viewed on national television every Sunday morning. He is the author of the widely acclaimed, Power of the Pew, and has written extensively on faith-based community developments. Of note: "Mission to Mandate," in the National Urban League's State of Black America. In addition to such articles, Dr. Richardson's most powerful sermons can be found in publications including, Keep the Faith (Welcome Rain Publishers) and Joy to the World (Simon & Schuster).

A man of enormous compassion, intuitive reason, absolute commitment, and an incisive mind, Dr. Richardson demonstrates in his persona the marvelous union of passion and intellect. He is a national advocate for economic equity and his counsel and advice are widely solicited in several major corporate boardrooms throughout America. Dr. Richardson currently serves as a director or trustee for Pepsi Cola (Ethnic Advisory Board); the Ujamaa Community Development Corporation; the Harvard University Divinity School Summer Leadership Institute for Church-based Community and Economic Development; Comcast Corporation and NBC Universal Joint Diversity Council; and Grace Community Development Corporation. He is Chairman of the Board of the National Action Network; the Conference of National Black Churches; American Legacy Magazine; and Virginia Union University.

Redacted pursuant to N.Y. Public Officers Law, Art.6

BioTrackTHC
The Only Seed To Sale Solution

3101 N. Federal Highway
Suite 400
Fort Lauderdale, FL 33306
800.797.4711

Date: 5/19/2015

Company: Citiva Medical Management

Reference: BioTrackTHC™ New York Letter of Intent

Dear Mr. Lehan,

BioTrackTHC™ provides effective cutting edge technology solutions for the emerging legal marijuana industry that (1) prevents product theft; (2) Assists business owners with running their cultivating, packaging, and retail operations more profitably and to better comply with the law; (3) All without leaving sensitive business and consumer data vulnerable in the cloud. Specifically, BioTrackTHC™ is the industry's only true seed to sale software system with enterprise resource planning, complete inventory tracking, point of sale, marketing, financial reporting and regulatory compliance features. And because it is a server based system with advanced security features, customers can rest assured that no one, not even the BioTrackTHC™ team, can access their business or consumer information without their permission.

This document confirms BioTrackTHC™ has entered into a formal agreement with Citiva Medical Management is to provide software solutions guaranteed to meet published New York State Department of Health reporting, regulation, and compliance guidelines for legal marijuana producer, processor and retail facilities in the event that you obtain an authorized license.

We appreciate your consideration of BioTrackTHC™ and look forward to assisting you in your efforts to secure a license.

Yours truly,

Alexandra Winkler
Administrator of Sales

Your Signature: _____

Richard Lehan
Director of Information Technology
Citiva Medical Management LLC.

Cannabics™
Cannabics Pharmaceuticals Inc.

#3 BETHESDA METRO CENTRE
SUITE 700
BETHESDA, MD 20814

Tel (877) 424-2429
Cannabics.com

June 3rd, 2015

MEMORANDUM OF UNDERSTANDING

THIS MEMORANDUM OF UNDERSTANDING ("MOU") made this June 3rd, 2015, by and between CANNABICS PHARMACEUTICALS, INC., (the "Company") a publicly traded Nevada Corporation, and by CITIVA MEDICAL, ("Citiva") a New York Corporation; together "the Companies"

WITNESSETH:

WHEREAS, Cannabics Pharmaceuticals Inc. is a renowned Israeli Bio-Tech company publicly traded on the US markets (CNBX) and engaged in the development of Cannabinoid based medicine. The Company has successfully developed standardized delivery systems and personalized anticancer therapies based upon cannabis originated compounds, as well as novel biotechnology tools and bioinformatics. The Company's 1st patent is "Cannabics SR", the world's first extended release cannabis capsule. Their 2nd patent just filed with the USPTO within the last 30 days covers its System and Method for High Throughput Screening of Cancer Cells.

Cannabics' team of scientists has developed a high throughput screening system which is specifically designed to give personalized antitumor treatments to cancer patients. In this proprietary system, biopsies are treated, in-vitro, with innumerous plant extract combinations and the antitumor effects are screened and calculated. The Company plans to complete the development of this novel and sophisticated technology and license it by the end of 2016.

Further, Cannabics Pharmaceuticals Inc. is specifically licensed by the Israeli Ministry of Health's Israeli Medical Cannabis Agency to work with and commission research upon Cannabis and its properties, and has a state of the art laboratory for this purpose. The company's first trial for catechsia is scheduled to begin at the world renowned Rambam Hospital in northern Israel within the next 60 days.

WHEREAS, Citiva – Is a New York based company which seeks to provide cutting-edge cannabinoid based products and to establish treatment programs to target specific illnesses and diseases, including childhood epilepsy, pediatric cancer, central nervous disorders, and other ailments. Additionally one of the underlying aims of the company is to conduct research and develop partnerships with Universities, Hospitals and Institutions to establish New York as the global epicenter for cannabinoid research.

CITIVA is an attractive partner to Cannabics Pharmaceuticals due to its medical vision, values and particularly its involvement with the NGO Strains of Hope, whose goals and outlook is shared by the Company.

WHEREAS; the Companies believe that their scientific goals and interests are symbiotic, and by working in tandem, they can both jointly progress further towards both their individual and shared goals;

THEREFORE, the Parties hereby confirm their mutual desire to memorialize these preliminary understandings and hereby express their intent as expressed under the terms of this MOU.

NOW, THEREFORE, in consideration of their mutual promises and agreements, the Parties have contemplated the following prospective ventures between them:

1. Citiva and Cannabics Pharmaceuticals are desirous to work in collaboration to create new and innovative cannabinoid based medicinal products to be supported by clinical evidence. The parties shall seek to collaborate with the current oncology community in New York state.

2. Such an undertaking is understood to encompass collaboration in regards to cannabinoid research, clinical studies, product development, and related matters including but not limited to ailments such as cancer, diabetes, neuropathies/pain management, neuro-degenerative diseases and other related maladies. All costs to be borne by Citiva.

3. It is proposed that Citiva shall request from Cannabics Pharmaceuticals certain chemiological information based upon certain select strains of Cannabis which Citiva believes are medically useful towards its purpose. Cannabics Pharmaceuticals would carry out extensive laboratory testing and proprietary analysis and provide said data to Citiva. The next contemplative phase would be for Cannabics Pharmaceuticals to initiate subjective, observational, and finally clinical studies upon such strains, given the parameters of authorized medical institutions at that time.

4. It is fully understood by Citiva that Cannabics is currently engaged in an exclusive engagement with another entity which gives geographic coverage to all 50 US states, for its time released capsules, and that prior to any definitive Agreement being signed, an executed Waiver must be provided by that partner with regards to the state of New

York. Said Agreement does not hinder utilization of the Company's System and Method for High Throughput Screening of Cancer Cells. Any ongoing supply of medically licensed cannabis oils in New York shall be for Citiva to supply.

Further each signator hereto promises complete confidentiality regarding this MOU.

NB - this Memorandum of Understanding is purely aspirational, and as such does not bind nor obligate either party to the other until execution of a definitive Agreement between them.

Itamar Borochov, Dir. CEO *on behalf of*
Cannabics Pharmaceuticals, Inc.

Josh Stanely, - CEO. *on behalf of*
Citiva Medical, LLC

Medication Management Research Network

June 3, 2015

Dr. Howard Zucker
Commissioner
New York State Department of Health
Corner Tower
Empire State Plaza
Albany, New York 12237

The University at Buffalo - Medication Management Research Network Patient Safety Organization (MMRN PSO) supports Citiva Medicals, LLC's application to receive one of the five licenses to cultivate and dispense medical marijuana in New York State. In the effort to promote patient safety, Citiva Medical will execute a voluntary participation agreement to incorporate the services of the MMRN PSO.

The Patient Safety Organization (PSO) component of the Medication Management Research Network at the University at Buffalo was established and received federal certification from the Agency for Healthcare Research and Quality (AHRQ) in January 2010 (recertified 2013). The mission of the MMRN PSO is to engage in meaningful quality improvement collaborations with health care sites in New York utilizing health information technology to improve quality of care, reduce adverse drug events, and enhance patient safety. PSOs serve as independent, external experts who can collect, analyze, and aggregate patient safety events locally, regionally, and nationally to develop insights into the underlying causes of patient safety events.

Patient Safety Activities Include:
1.Efforts to improve patient safety and quality of care
2.Collection/Analysis of de-identified medication profiles
3.Development and Dissemination w/ respect to improving patient safety
4.Using data to encourage safety and providing feedback to minimize patient risk
5.Utilization of qualified staff to perform any of the above
6.Operation of patient safety evaluation system and provision of feedback to participants

The Medication Management Research Network is happy to participate in this initiative to promote patient safety and clinical care for these eligible patients.

Sincerely,

Jeff Lombardo PharmD, BCOP
Research Assistant Professor
UB School of Pharmacy and Pharmaceutical Sciences

Patient Safety Officer
Patient Safety Organization
Medication Management Research Network
Translational Pharmacology Research Core
NYS Center of Excellence in Bioinformatics and Life Sciences
701 Ellicott St Buffalo NY 14203
Email: jcl2@buffalo.edu P: 716-881-7589 www.bioinformatics.buffalo.edu

BESTMSLs
1133 Broadway, Suite 223
New York, NY 10010
www.bestmsls.com
646-344-3014

BESTMSLs

6/2/15

To Whom It May Concern:

BESTMSLs is a contract medical affairs organization whose specialty is medical education, communicating complex scientific information to healthcare practitioners on behalf of the pharmaceutical and biotech industries so they can make the most informed and appropriate decisions with their patients.

BESTMSLs will be working with Citiva Medical to provide a team of highly trained MDs, PharmDs, PhDs, and other healthcare providers to educate healthcare practitioners on the science of medicinal cannabis and the unmet need in many therapeutic areas.

Educational areas where the MSLs are utilized include one on one meetings with physicians, responding to dosing or product questions from physicians, hosting educational group meetings, convening advisory boards to determine needs of healthcare providers, presenting new data at national and international Meetings, and various other scientific and educational venues all in support if increasing medical education effectiveness.

The decision to deploy a team of Medical Science Liaisons demonstrates the commitment of Citiva Medical to providing education and resources to healthcare practitioners so they can better understand the science and be empowered to make appropriate decisions for their patients.

With over 25 years of medical education experience, we are thrilled to be in partnership with Citiva Medical as we enter a new era of the medicinal use of cannabis in the state of New York.

Sincerely,

David Best, MD MBA

Managing Director

Michael Banks, MD

Managing Director

What is a Medical Science Liaison?

The Medical Science Liaison (MSL) is a specific role within the pharmaceutical, biotechnology, medical device, CRO and other health-care industries. MSLs have advanced scientific training and academic credentials generally consisting of a doctorate degree (Ph.D., PharmD., M.D.) in the life sciences. They concentrate on a specific Therapeutic Area (i.e. Oncology, Cardiology, CNS, Pulmonary, Hematology, Surgery, Women's Health Care, etc) and disease state.

Medical Science Liaisons are vital in the success of a company. They work throughout a product's lifecycle, help to ensure that products are utilized effectively, serve as scientific peers and resources within the medical community, and are scientific experts to internal colleagues at companies. However, the primary purpose of the MSL role is to establish and maintain peer-peer relationships with leading physicians, referred to as Key Opinion Leaders (KOL's), at major academic institutions and clinics.

TOWN OF ROMULUS

Tom Bouchard, Chairman
William Karlsen, Vice-Chairman
Cindy Meckley, Member
Al Nivison, Member
Mary Joslyn, Member
Kate Siniscropi, Member
Sue Ellen Balluff, Member

PLANNING BOARD
1435 Prospect Street
P.O. Box 177
Willard, New York 14588
PHONE: 607-869-9326
FAX: 607-869-5763
Email: Romulus@rochester.rr.com

June 2, 2015

John F. Caruso, PE. PMP
242 West Main Street, Suite 100
Rochester, NY 14614

Dear John,

This is to confirm that as a result of meeting with the Town of Romulus Planning Board on June 1, 2015, we were able to determine that the Citiva Medical project is an allowable use and will not require a special use permit in order to proceed.

It was a pleasure meeting with you last night. The board appreciated your willingness to discuss this important project. We extend our sincerest wishes for success for your project.

Please do not hesitate to contact us if you have any concerns, or if we can be of any further assistance.

Sincerely,

Tom Bouchard, Chairman
Planning Board

TOWN OF ROMULUS ZONING PERMIT

Date: 3 Jun 15 Permit Number 16-15

Applicant: Citiva Medical, 7378 Amboy Road, Staten Island, NY 10309

Permit to: Citiva Medical, 7378 Amboy Road, Staten Island, NY 10309

Description: New Building

At Location: 5786 State Route 96

Tax Map#: 8-1-03

Zoning District: Agricultural

Lot Size: 11.85 acres

Structure is To Be: 15' Height, 180' Width and 500' Length

Special Conditions: Must Get A County Permit

Owner: Citiva Medical, 7378 Amboy Road, Staten Island, NY 10309

Permit Fee: $25.00 Code Enforcement Officer: _____ Date: 3 Jun 15

THE ISSUANCE OF THIS PERMIT DOES NOT RELEASE THE APPLICANT FROM THE CONDITIONS OF ANY APPLICABLE BUILDING OR HEALTH CODE RESTRICTIONS.

SENECA COUNTY
CHAMBER of COMMERCE

June 2, 2015

New York State Department of Health
Bureau of Narcotic Enforcement
Medical Marijuana Program
150 Broadway
Albany, NY 12204

To Whom It May Concern:

On behalf of more than 550 member businesses and trusted partners of the Seneca County Chamber of Commerce (the Chamber), I am pleased to express our full support for Citiva Medical in regards to their application for a medical marijuana license and their corresponding investment in the Town of Romulus, NY.

The Chamber is one of the Finger Lakes region's largest and most influential business organizations. As the leading voice of business in the greater Seneca County area for more than 40 years, the Chamber facilitates interaction between our membership, government, the general public and those looking to do business in our community. We have excelled in four core areas: Tourism/Economic Development, Public Policy and Advocacy, Health Insurance and Stakeholder Education. We are proud to take an active role in the economic growth of our community.

To that end, the Chamber has closely followed the effort to bring medical marijuana to New York State. We believe the initiative has great potential to provide relief for thousands of patients suffering from serious illnesses throughout the Finger Lakes region as well as the ability to help transform our community into a respected, leader of innovation and research.

Furthermore, the Chamber applauds the New York State Department of Health for its comprehensive approach to implementing a safe, effective and accessible medical marijuana program for all New Yorkers – particularly upstate.

We urge your consideration of Citiva Medical as one of the five licensed organizations to manufacture and dispense medical marijuana in New York State. Their record of achievement and corporate philosophy closely aligns with our mutual goals for the future success of this program.

Sincerely yours,

Mark Benjamin
Chairman of the Board
Seneca County Chamber of Commerce

2020 US Route 20 | Seneca Falls, NY 13148 | p. (315) 568-2906 | f. (315) 568-1730 | tf. (800) 732-1848
www.senecachamber.org | info@senecachamber.org

Town of Gates

1605 Buffalo Road
Rochester, New York 14624
585-247-6100

Supervisor
Mark W. Assini

Town Council

Frank X. Alkofer
Lee A. Cordero
Christopher B. DiPonzio
Richard A. Warner

5/20/15
New York State Department of Health
Bureau of Narcotics Enforcement
Medical Marijuana Program
150 Broadway
Albany, New York 12204

New York State approved the use of medical marijuana by passing the Compassionate Care Act in 2014. Patients that suffer from terminal illnesses like Cancer, Huntington's and ALS as well as debilitating diseases like Epilepsy and MS will find relief through this newly authorized medication. This medication is not smoked and can't be consumed in a public place. This is truly a therapeutic drug.

[redacted] Families deserve this medical option for their loved ones.

Therefore, I urge you to grant Citiva Medical a license to dispense medical marijuana in New York State. Citiva's plan to open a dispensary in our town in a properly zoned retail location will be another resource that qualifying patients can utilize in our area to get the relief they need from some of mankinds most horrific diseases. Citiva's unparalleled security plan to move and sell their medicine make me believe Citiva and the residents of Gates will have a long and fruitful partnership.

Sincerely,

Mark W. Assini

Mark W. Assini

Gates Town Supervisor

Town Council
Bill Meyer, Deputy Supervisor
Vern Conway
Mike Becallo
Mark Venesky
Dick Cushman

Town Clerk
Tracy M. Cosilmon
(315) 699-8109

Supervisor
Jessica Zambrano
(315) 699-1414

Highway Superintendent
Christopher J. Woznica
(315) 699-2745
Fax (315) 699-2746

Receiver of Taxes
Sharon M. Edick
(315) 699-2756
Fax (315) 699-9562

TOWN OF CICERO

COUNTY OF ONONDAGA
8236 Brewerton Road, Cicero, New York 13039 • FAX 315-699-0039 • e-mail: jzambrano@ciceronewyork.net

May 29, 2015

To whom it may concern:

Citiva Medical has put together an application to start a project that includes the cultivation, manufacture, distribution and sale of medical marijuana. While the cultivation and manufacturing functions will be located in other sites, Citiva has selected Cicero as a dispensing center.

We are pleased to support this new industry endeavor, primarily because of the therapeutic benefits a medical marijuana program will provide to those patients in need. We are also excited to be part of this new start-up industry that will, no doubt, set the standard across the county.

The Cicero pharmacy site that Citiva has selected is an ideal location because it is very close to an Interstate-81 exit, making it easily accessible to patients from across our Central New York area. The building has ample space and parking for patients and employees. Additionally, the site is close to numerous retail shops and food establishments for convenience.

The Citiva leadership anticipates employing approximately 20 professional and security personnel, so we are pleased with this job growth opportunity for our Town.

Given all the positive outcomes of this endeavor for patients in need and for our Town, I would like to add our full support for the project. Please feel free to contact me should you have any questions: (315) 699-1414 or jzambrano@ciceronewyork.net.

Sincerely,

Jessica Zambrano

Jessica Zambrano
Cicero Town Supervisor

Town of Poughkeepsie
Office of Municipal Development

1 Overocker Road
Poughkeepsie, NY 12603

845-485-3657 Phone
845-486-7885/790-4772 Fax

June 4, 2015

VIA E-MAIL

Dr. Howard Zucker, Commissioner
New York State Department of Health
Corning Tower
Empire State Plaza
Albany, New York 12237

Re: Citivia Medical Proposed Lease Site
2290 South Road, Town of Poughkeepsie

Dear Commissioner Zucker:

In regard to Citivia Medical's proposed lease of a ±2,150 square foot space at 2290 South Road, Tax Parcel No. 6159-01-211992, in the Town of Poughkeepsie, please be advised that the property is zoned Highway Business (B-H) District, which permits retail uses. Accordingly, use of the site for a retail medical dispensary is permitted under Chapter 210 of the Town of Poughkeepsie Code.

Please contact me with any questions.

Very Truly Yours:

Neil A. Wilson
Director of Municipal Development

NAW:me

Hon. Todd Tancredi, Supervisor, via email
Hon. Joseph Lepore, Councilman, via email
Sarah Davis, Zoning Administrator, via email
Frank M. Cicero, via email
Patrick H. McCarthy via email
Ron Hicks, via email

COUNTY OF DUTCHESS

MARCUS J. MOLINARO
COUNTY EXECUTIVE

June 3, 2015

Dr. Howard Zucker
Commissioner
New York State Department of Health
Corning Tower
Empire State Plaza
Albany, NY 12237

Dear Dr. Zucker:

Ensuring our residents have access to the finest health care options available has always been one of my top priorities, which is why I have closely followed efforts in Albany to expand the pharmaceutical industry in New York to manufacture and dispense medication derived from cannabinoids under the state's Compassionate Care Act.

The Act provides for the initial licensing of up to five organizations in New York State and allows the Commissioner to license additional organizations in the future. As with the manufacture and distribution all controlled substances, it is critically important that each license is granted only to entities that take a pharmaceutical approach to their production and distribution, and that each entity maintain the highest level of quality and security.

My office has met with representatives from Citiva Medical, and after careful consideration and review, I believe they represent the highest level of quality, security, and expertise necessary to secure a license that would authorize them to manufacture and dispense pharmaceuticals authorized under the Compassionate Care Act in New York State.

Sincerely,

Marcus J. Molinaro
Dutchess County Executive

SULLIVAN COUNTY
PARTNERSHIP
FOR ECONOMIC DEVELOPMENT

June 3, 2015

To Whom It May Concern:

The Partnership for Economic Development in Sullivan has been advocating for business attraction and expansion for the past 20 years. We are the premier economic development agency growing the economy of Sullivan County. Our board is made up of distinguished leaders from various industries which meet regularly to share ideas and information and tactical strategies with common goal of making Sullivan County a business friendly community and fostering a healthy business climate within which our business can prosper..

The Partnership advocates and facilitates for its member businesses and for prospective business seeking to invest and create meaningful jobs in Sullivan County. We have been closely monitoring the passage of New York's Compassionate Care Act. Subsequently, we have developed a keen interest in who the state will choose as the five Registered Organizations to operate a medical marijuana program.

Medical marijuana, as the State of New York has constituted, has the potential to provide relief for thousands of patients suffering from serious illnesses in Sullivan County. Beyond that, medical cannabis is one of the fastest growing industries in the country, and that presents an interesting opportunity for our community.

We expect that any company seeking to enter this industry in our area must be held to the highest standards, and comply with the regulatory directives that New York State has crafted as a foundation of its award procedures. Our support for a specific application is contingent upon a commitment to quality and most importantly, security.

Citiva Medical has the experience needed in order to provide the highest level of service to Sullivan County residents. Their company, led by nationally renowned medical cannabis pioneer Josh Stanley, has a game-changing philosophy of delivering pharmaceutical quality medicine.

Citiva Medical's partnership with The Center for Discovery is a clear indication of their dedication to the intent of the New York State license and to our area. The Center for Discovery is Sullivan County's largest employer and one of the largest providers in New York State's Children's Residential program. This is an exciting partnership that is contingent upon Citiva Medical being awarded Registered Organization status by the state.

The Partnership for Economic Development supports Citiva Medical's application to secure a medical marijuana license in New York State.

Respectfully submitted,

Marc A. Baez
President/CEO

Jacob Billig
Chairman of the Board

198 Bridgeville Road, Monticello, New York 12701, 845-794-1110 (p), 845-794-2324 (f)
www.scpartnership.com

Mark B. Taubman, MD
CEO, University of Rochester Medical Center and UR Medicine
Dean, School of Medicine and Dentistry
Senior Vice President for Health Sciences

UNIVERSITY of ROCHESTER MEDICAL CENTER

MEDICINE of THE HIGHEST ORDER

June 1, 2015

Dr. Howard Zucker
Commissioner
New York State Department of Health
Corning Tower
Empire State Plaza
Albany, New York 12237

Dear Commissioner Zucker:

The University of Rochester Medical Center (URMC) supports Citiva Medical, LLC's application to receive one of the five licenses to cultivate and dispense medical marijuana in New York State.

With the passage of the Compassionate Care Act, we believe New York is well-positioned to be at the forefront of medical marijuana research and patient care. In order to achieve that goal, we believe it is critical that clinical research and policy analysis be a primary focus of this program.

Several months ago, we began to meet with the principals of Citiva Medical, and we believe that a group such as this could provide a significant service to our region. Over the course of these meetings, we had an opportunity to meet Josh Stanley, and the organization seems to have the scientific and technical expertise to provide the services required by a registered organization. Moreover, Mr. Stanley and Citiva Medical have been actively involved in the community. Citiva Medical has held community events across New York to better understand the needs of this state's patients. Mr. Stanley has devoted countless hours to meeting with parents of sick children and providing them with important information on medicinal cannabis.

We believe it is vital that research is conducted in order to further inform efficacy and ensure the safest environment for patients accessing this method of treatment. Through the course of several meetings, we have explored how Citiva Medical could help URMC with regard to research related to medical conditions covered by the Compassionate Care Act. Citiva has over a century of combined experience in the medicinal cannabis industry and in clinical healthcare. Citiva's considerable experience developing a wide variety of medicinal strains makes their organization an ideal research partner in a clinical setting. We would be very comfortable working more directly with Citiva Medical if the Department of Health granted it a license.

We further express our interest in this application stemming from Citiva's commitment to ensuring access for all patients regardless of resources. We believe that Citiva is committed to supporting New York's mission of enhancing quality of life for patients throughout the state. To support this mission, Citiva Medical has committed to establishing and funding a charitable organization, Strains of Hope, to ensure access to this treatment option for eligible patients, regardless of their ability to pay.

Thank you for your consideration of Citiva Medical, LLC's candidacy and licensure in this important program.

Sincerely,

Mark B. Taubman, M.D.

601 Elmwood Avenue · Box 706 · Rochester, NY 14642
585.275.0017 · 585.273.1059 fax · Mark_Taubman@urmc.rochester.edu · www.urmc.rochester.edu

MEMORANDUM OF UNDERSTANDING

(Hereinafter referred to as the "MOU")

Between

THE UNIVERSITY OF THE WEST INDIES

(Hereinafter referred to as "UWI Mona")

And

CITIVA MEDICAL

WHEREAS the University of the West Indies, a regional institution established by Royal Charter, with Centre Headquarters at Mona, Kingston 7, Jamaica, was established to foster research and promote tertiary education in the Caribbean;

AND WHEREAS Citiva Medical a company duly incorporated in the State of New York and whose address for the purposes hereof is 7378 Amboy Road, Staten Island, New York 10307 seeks to provide cutting edge cannabinoid based products and to establish treatment programs to target specific illnesses and diseases, including childhood epilepsy, cancer, central nervous disorders, and other ailments, in addition to which, one the underlying aims of the company is to conduct research and develop partnerships with Universities, Hospitals and Institutions to establish Jamaica and the Caribbean as the global epicenter for cannabinoid research.

AND WHEREAS Parties recognize the benefits of collaborating their expertise and efforts.

THEREFORE IT IS AGREED AS FOLLOWS

1. Purpose

The Parties recognize the benefits to be derived from increased collaboration, cooperation and interaction for the further promotion and understanding of the use of medical Cannabis in regards to cannabinoid research, clinical studies, clinical product development, and related matters including but not limited to ailments such as cancer, diabetes, neuropathies/pain management, neuro-degenerative diseases and other related maladies (hereafter, collectively referred to as the "Field").

The purpose of this MOU is to define the areas for fundamental, academic research in which the Parties desire to work together in the future for their mutual benefit to foster a collaborative framework between UWI Mona and Strains of Hope in the Field with a view to benefiting from each other's initiatives and working procedures and to support collaboration among the researchers associated with both Parties.

2. Scope

This MOU sets forth the intentions of the Parties for increased collaboration, cooperation and interaction and does not create any legally binding commitments. If the Parties later agree to undertake specific joint projects with legally binding obligations, they will develop separate written agreements for such projects, setting out each Party's contributions, deliverables, and budgets.

The Parties intend to:

Pursue collaboration on fundamental, academic research, related to the development of the Medical Cannabis industry throughout the world, for example:

Parties agree to the respectful, and open sharing of data, private IP, technological processes and research with the confidentiality outlined herein, provide support with the drafting of legislation pertaining to the decriminalization of marijuana for medical purposes, the utilization of UWI's capabilities in analytical botanical chemistry and biological areas and UWI's greenhouse/atrium for small scale, controlled research growth focusing on all aspects of strain, including growing conditions, DNA sequencing, etc. Strains of Hope will comply with all of the requirements, rules and regulations of UWI, including safety, health, security, access and operational practices.

With the prior written consent, both Parties may use any collaboration results stemming from any aspect of the partnership in the news/ media, or for other publication including but not limited to other research purposes. Any such use by either Party must make explicit reference to the report as well as to both Parties involved in this MOU.

Parties agree to work toward the development of future protocols concerning the following: ownership of IP developed via partnership, parameters of future development, Jamaican patent process, taxation of equipment and productive needs.

3. Costs

Each Party will be responsible for its own costs in connection with all matters relating to collaborations under this MOU. Where possible and appropriate, the Parties may also seek funding for collaborations from Local and International research agencies.

4. General Provisions

Any specific joint projects with legally binding obligations will be set forth in separate written agreements. Treatment of intellectual property rights developed through collaborations under this MOU will be determined between the Parties through mutual consultation and separate written agreements on a case-by-case basis.

5. Confidentiality

The Parties agree that there is no intention to share any confidential or proprietary information in any collaboration under this MOU. If either Party wishes to disclose information it considers to be confidential or proprietary to the other Party, the Parties will enter into a written non-disclosure agreement.

6. Duration

This MOU shall be effective for a period of three (3) years from the date of final signature. It may be modified or extended by mutual written agreement by the Parties. This MOU may be terminated by either Party upon six (6) months advance written notice.

7. Interpretation

Any conflict arising from the implementation of this MOU shall first be negotiated by the Parties. If the conflict cannot be resolved through such negotiations, the matter shall be referred to the

Jamaican Dispute Resolution Foundation, or such other persons, body or process as the Parties may agree, for resolution.

8. Entire Understanding

This MOU constitutes the entire understanding between the Parties with respect to the programme and may not be modified except as hereinbefore provided.

IN WITNESS WHEREOF, the undersigned have signed this Memorandum of Understanding in triplicate in Kingston, Jamaica.

For and on behalf of the University of West Indies

By _____ Date: June 3, 2015

Professor Archibald McDonald
Principal

Witness by

_____ Date: June 3, 2015

For and on behalf of the Citiva Medical.

By _____ Date: _____

Mr. Josh Stanley
Director

Witness by

_____ Date: _____

Jamaican Dispute Resolution Foundation, or such other persons, body or persons as the Parties may agree, for resolution.

8. Entire Understanding

This MOU constitutes the entire understanding between the Parties with respect to the programme and may not be modified except as hereinafter provided.

IN WITNESS WHEREOF, the undersigned have signed this Memorandum of Understanding in triplicate in Kingston, Jamaica.

For and on behalf of the University of West Indies

By: _____ Date: _____

Professor Archibald McDonald
Principal

Witness by:

_____ Date: _____

For and on behalf of Dispute

By: _____ Date: June 3, 2015

Mr. Josh Stanley
Director

Witness by:

_____ Date: 6/3/15

THE CENTER FOR DISCOVERY, INC.

June 1, 2015

Josh Stanley
Citiva Medical LLC
7378 South Amboy Road
Staten Island, New York 10307

Dear Mr. Stanley:

This letter indicates the intent of The Center For Discovery, Inc. ("The Center") to lease to Citiva Medical LLC ("Citiva"), a parcel of land of approximately 5 acres, to be subdivided from a larger parcel owned by The Center, designated as SBL TH 7.-1-39.1, located between Old Route 17 and Route 17 / I-86 in the Town of Thompson, Sullivan County, on terms yet to be determined. Both The Center and Citiva have examined the parcel and have determined that it is appropriate for growing and processing the cannabinoid products that would be produced by Citiva should it be awarded a Registered Organization license by New York State under the Compassionate Care Act. The lease will be conditioned upon Citiva's award of a Registered Organization license under New York's Compassionate Care Act.

The Center for Discovery is the largest provider of services in New York State's Children's Residential Program, providing residential, educational, health and clinical services to children and adults with complex medical needs, including autism spectrum disorders. The Center has collaborated with many notable academic and scientific researchers and universities investigating the benefits of cannabinoids for the individuals that we serve. The lease will be accompanied by a Memorandum of Understanding in which The Center and Citiva set forth collaborative efforts in fostering research in the use of cannabinoids to treat individuals with various medical conditions, including conditions such as those experienced by individuals served by The Center.

Subject to further negotiation, the lease may also include construction, consultation and other services to be performed by The Center for Citiva in connection with its licensed business.

Neither party shall be bound by this Letter of Intent unless and until a mutually agreed-upon lease is fully executed by the parties. Thank you.

Very truly yours,

Patrick H. Dollard,
President and CEO

Harvard Medical School
Department of Psychiatry
ASSOCIATE PROFESSOR
OF PSYCHIATRY

McLean Hospital
Brain Imaging Center
DIRECTOR
COGNITIVE AND CLINICAL
NEUROIMAGING CORE

STACI A. GRUBER, PH.D.

May 22, 2015

Josh Stanley, Founder
Citiva Medical LLC
7378 Amboy Road
Staten Island, NY 10307

Dear Mr. Stanley,

I am writing to express my enthusiastic support of Citiva Medical, and to formalize my commitment to serving as an unpaid consultant to the Citiva Medical team. As you know, my clinical research experience has included a focus on both recreational and medical marijuana use, and I am therefore delighted to provide consultation on projects related to advancing the science behind the therapies. For example, to date, no empirical studies of the specific impact of medicinal marijuana on cognition or brain function have been published, despite the fact that medicinal marijuana has been available in some states since the mid 1990s. Citiva Medical is clearly invested in facilitating both top tier clinical care and research endeavors which are likely to help shape public policy and foster public health initiatives.

Your extensive experience in the medicinal cannabis industry and your dedication to advancing the science of cannabinoid-based medicines is impressive. Citiva Medical is uniquely poised to make highly significant contributions to both clinical and research endeavors related to cannabinoid-based therapies, and I wish you the best of luck in your application to New York State.

Sincerely,

Staci A. Gruber

McLean Hospital, 115 Mill Street, Belmont, Massachusetts 02478-9106, USA
Telephone (617) 855-2762 – FAX (617) 855-3713 – e-mail [illegible]

To Whom It May Concern

As a Pediatric Nurse Practitioner, I have been in the medical field for over 20 years. I have worked with the sickest and most frail children in Western New York in the Pediatric Intensive Care Unit and Pediatric Craniofacial Plastic Surgery. Watching their families sit helplessly praying for other options to save their child left a lasting impact on me both professionally and personally. I have made it my role and responsibility to provide compassion to all those I have had the privilege to care for.

[redacted] As these are the foundational building blocks of any an organization that provides food, ingredients and/or medicines.

We believe in research and evidence based medicine but we also believe in providing suffering patients with lifesaving quality medicine that has little to no negative side effects. [redacted] next pharmaceutical options are limited and carry hefty side effects, including aplastic anemia (potentially fatal blood cancer) and blindness [redacted] we need other options in New York State and therefore we became advocates for the legalization of medical marijuana. During this time we have had the opportunity to see medical marijuana programs in other states firsthand and realize that New York State can do better.

[redacted] with backgrounds in medicine and quality/food safety, we have high expectations. We believe that Citiva Medical, is the company to provide [redacted] children and others the medicine they so desperately need. In meeting with Citiva Medical, it is clear that their focus on quality, standardization of the medicines and supply risk management puts them at the forefront of the NYS industry. We look forward to working with Citiva Medical to save [redacted] others in New York State.

Sincerely,

Christine and Tim Emerson

[redacted]

Wendy Conte
[redacted]
May 27, 2015

To Whom It May Concern:

Please accept this letter of referral for Citiva Medical as a candidate for the New York State Compassionate Care Act implementation. [redacted] I are [redacted] aware of the importance of this next step in the Compassionate Care Act. [redacted] I was involved early on in the research on the promising use of high cannabinoid medicine on children like Anna and the eventual passing of the Bill. In my research and travels, I witnessed quite a bit in terms of how other states went about similar legislation. It is imperative that the chosen team fully understand and have experience in how to do this with quality and integrity.

As an educated [redacted] I was interested in a medically focused, highly regulated legislation of which we could be proud and which would save lives. From the beginning, our goal was for patients to benefit from the best possible standardized medication. I've met with Josh Stanley numerous times and have witnessed the passion and dedication of his team on providing high quality and strictly-controlled medication to those in need. [redacted] I have always wanted medicine [redacted] but fully understood from the beginning that this must be done with quality, ethics, safety and high standards. I have the utmost respect and confidence in the Citiva team. From the beginning we wanted New York to stand out and wanted our hard work in the passing of the Bill to end in a high-quality, ethical implementation that is fair to all and up to the standards New Yorkers deserve. Josh Stanley and the Citiva team are well-positioned in their dedication, knowledge, passion and experience to make this happen.

As you can imagine, it is bittersweet that [redacted] will not benefit from our hard work. [redacted] I want to make it clear that the reason I cannot do that is because of the Citiva team and what I have seen in Josh Stanley. This next stage of implementation cannot be put in better hands. It is without reservation that I recommend they are chosen to fulfill this most important role. If you want to hear more about why I feel such confidence in Citiva and Mr. Stanley, feel free to contact me at any time. I would relish the opportunity to further discuss my confidence in Citiva.

Sincerely,

Wendy Conte

[redacted]

PETITION IN SUPPORT OF CITIVA MEDICAL

New York State has enacted a limited medical marijuana program to help treat people with certain conditions, including Cancer, HIV/AIDS, ALS, Parkinson's Disease, MS, Spinal Cord Damage, Epilepsy, Dravet Syndrome, Inflammatory Bowel Syndrome, Huntington's Disease and Neuropathy.

This program, administered through **the Department of Health, will finally bring relief to many suffering patients in New York.** The DOH will grant 5 licenses to operate as registered organizations (RO) allowed to grow, extract and dispense medical marijuana.

Led by preeminent medical cannabis advocate and entrepreneur Josh Stanley, **Citiva Medical is a New York State company specializing in safe and effective products based on the latest advancements in cannabinoid medicine.** Citiva Medical's mission also includes conducting research and developing partnerships with universities, hospitals and institutions across the state to **establish New York as the global epicenter for cannabinoid research.**

ROs are not all created equal. Standardization is of the utmost importance so that patients will receive consistent and safe doses of their medication. Citiva Medical will be the industry leader based upon their stringent standardization policies and procedures. Citiva Medical has a team with **over 100 combined years of experience in clinical healthcare and the medicinal cannabis industry** and will bring safe and effective products to patients in New York.

I strongly support the New York State Department of Health granting RO status to Citiva Medical. As a responsible leader in this industry, Citiva Medical will bring safe quality medicine to patients suffering from chronic and debilitating disease and provide them with a chance at a better quality of life.

NAME	ADDRESS	PHONE/EMAIL	SIGNATURE
Michael Misino	[redacted]		
Patricia Gawron			
Jassa Almeqfel			
Angel Hernandez			
Leo Morales			
Victoria Colon			
Joann Riccio			
Jimmy Cassese			
Dylan Vokes 1759			
Nicholas Thomas			
Bobby Jeve			

Please print, sign and mail petition back by TUESDAY, MAY 26, 2015 to:
Citiva Medical LLC
7378 Amboy Road
Staten Island, NY 10307

PETITION IN SUPPORT OF CITIVA MEDICAL

New York State has enacted a limited medical marijuana program to help treat people with certain conditions, including Cancer, HIV/AIDS, ALS, Parkinson's Disease, MS, Spinal Cord Damage, Epilepsy, Dravet Syndrome, Inflammatory Bowel Syndrome, Huntington's Disease and Neuropathy.

This program, administered through **the Department of Health, will finally bring relief to many suffering patients in New York.** The DOH will grant 5 licenses to operate as registered organizations (RO) allowed to grow, extract and dispense medical marijuana.

Led by preeminent medical cannabis advocate and entrepreneur Josh Stanley, **Citiva Medical is a New York State company specializing in safe and effective products based on the latest advancements in cannabinoid medicine.** Citiva Medical's mission also includes conducting research and developing partnerships with universities, hospitals and institutions across the state to **establish New York as the global epicenter for cannabinoid research.**

ROs are not all created equal. Standardization is of the utmost importance so that patients will receive consistent and safe doses of their medication. Citiva Medical will be the industry leader based upon their stringent standardization policies and procedures. Citiva Medical has a team with **over 100 combined years of experience in clinical healthcare and the medicinal cannabis industry** and will bring safe and effective products to patients in New York.

I strongly support the New York State Department of Health granting RO status to Citiva Medical. As a responsible leader in this industry, Citiva Medical will bring safe quality medicine to patients suffering from chronic and debilitating disease and provide them with a chance at a better quality of life.

NAME	ADDRESS	PHONE/EMAIL	SIGNATURE
Loretta Daniels		[redacted]	
Angela Adams			
PATRICK FOX			
Alex Speiser			
Daniel Kaufman			
Dan Bjorkenheim			
Olga Pagan			
[illegible]			
CATHERINE Koutrouvas			
Ramesh Hans			
ELIZABETH STILES			
Mary T. Walsh			
OVDI' AARON			

Please print, sign and mail petition back by TUESDAY, MAY 26, 2015 to:
Citiva Medical LLC
7378 Amboy Road
Staten Island, NY 10307

PETITION IN SUPPORT OF CITIVA MEDICAL

New York State has enacted a limited medical marijuana program to help treat people with certain conditions, including Cancer, HIV/AIDS, ALS, Parkinson's Disease, MS, Spinal Cord Damage, Epilepsy, Dravet Syndrome, Inflammatory Bowel Syndrome, Huntington's Disease and Neuropathy.

This program, administered through **the Department of Health, will finally bring relief to many suffering patients in New York.** The DOH will grant 5 licenses to operate as registered organizations (RO) allowed to grow, extract and dispense medical marijuana.

Led by preeminent medical cannabis advocate and entrepreneur Josh Stanley, **Citiva Medical is a New York State company specializing in safe and effective products based on the latest advancements in cannabinoid medicine.** Citiva Medical's mission also includes conducting research and developing partnerships with universities, hospitals and institutions across the state to **establish New York as the global epicenter for cannabinoid research.**

ROs are not all created equal. Standardization is of the utmost importance so that patients will receive consistent and safe doses of their medication. Citiva Medical will be the industry leader based upon their stringent standardization policies and procedures. Citiva Medical has a team with **over 100 combined years of experience in clinical healthcare and the medicinal cannabis industry** and will bring safe and effective products to patients in New York.

I strongly support the New York State Department of Health granting RO status to Citiva Medical. As a responsible leader in this industry, Citiva Medical will bring safe quality medicine to patients suffering from chronic and debilitating disease and provide them with a chance at a better quality of life.

NAME	ADDRESS	PHONE/EMAIL	SIGNATURE
FARRUKH MALIK	[redacted]	[redacted]	
Gary Szwech			
Keith Cillan			
Rebecca Cremaren			
Herbert R Blachman			
Soto, Ishmael			
Mardy Sitzer			
Christine Campbell			
Barbara Weinberg			
Marion			MARION I AAA
Steve Gross			
Susan Schoenbaum			

Please print, sign and mail petition back by TUESDAY, MAY 26, 2015 to:
Citiva Medical LLC
7378 Amboy Road
Staten Island, NY 10307

PETITION IN SUPPORT OF CITIVA MEDICAL

New York State has enacted a limited medical marijuana program to help treat people with certain conditions, including Cancer, HIV/AIDS, ALS, Parkinson's Disease, MS, Spinal Cord Damage, Epilepsy, Dravet Syndrome, Inflammatory Bowel Syndrome, Huntington's Disease and Neuropathy.

This program, administered through **the Department of Health, will finally bring relief to many suffering patients in New York.** The DOH will grant 5 licenses to operate as registered organizations (RO) allowed to grow, extract and dispense medical marijuana.

Led by preeminent medical cannabis advocate and entrepreneur Josh Stanley, **Citiva Medical is a New York State company specializing in safe and effective products based on the latest advancements in cannabinoid medicine.** Citiva Medical's mission also includes conducting research and developing partnerships with universities, hospitals and institutions across the state to **establish New York as the global epicenter for cannabinoid research.**

ROs are not all created equal. Standardization is of the utmost importance so that patients will receive consistent and safe doses of their medication. Citiva Medical will be the industry leader based upon their stringent standardization policies and procedures. Citiva Medical has a team with **over 100 combined years of experience in clinical healthcare and the medicinal cannabis industry** and will bring safe and effective products to patients in New York.

I strongly support the New York State Department of Health granting RO status to Citiva Medical. As a responsible leader in this industry, Citiva Medical will bring safe quality medicine to patients suffering from chronic and debilitating disease and provide them with a chance at a better quality of life.

NAME	ADDRESS	PHONE/EMAIL	SIGNATURE
Mohamed Idlim		[redacted]	
Rita O'Reilly			
ROGER BABB			
JEFFREY O'BRIEN			
MATTHEW CHRIST			
GUS TASOULIAS			
NOAM FREEDMAN			
Rosanne Rubino			
J Appelle Jr			
William Gawron			
KAY SIGLS			
Coleen Simpson			
Barbara Rudi			

Please print, sign and mail petition back by TUESDAY, MAY 26, 2015 to:
Citiva Medical LLC
7378 Amboy Road
Staten Island, NY 10307

PETITION IN SUPPORT OF CITIVA MEDICAL

New York State has enacted a limited medical marijuana program to help treat people with certain conditions, including Cancer, HIV/AIDS, ALS, Parkinson's Disease, MS, Spinal Cord Damage, Epilepsy, Dravet Syndrome, Inflammatory Bowel Syndrome, Huntington's Disease and Neuropathy.

This program, administered through **the Department of Health, will finally bring relief to many suffering patients in New York.** The DOH will grant 5 licenses to operate as registered organizations (RO) allowed to grow, extract and dispense medical marijuana.

Led by preeminent medical cannabis advocate and entrepreneur Josh Stanley, **Citiva Medical is a New York State company specializing in safe and effective products based on the latest advancements in cannabinoid medicine.** Citiva Medical's mission also includes conducting research and developing partnerships with universities, hospitals and institutions across the state to **establish New York as the global epicenter for cannabinoid research.**

ROs are not all created equal. Standardization is of the utmost importance so that patients will receive consistent and safe doses of their medication. Citiva Medical will be the industry leader based upon their stringent standardization policies and procedures. Citiva Medical has a team with **over 100 combined years of experience in clinical healthcare and the medicinal cannabis industry** and will bring safe and effective products to patients in New York.

I strongly support the New York State Department of Health granting RO status to Citiva Medical. As a responsible leader in this industry, Citiva Medical will bring safe quality medicine to patients suffering from chronic and debilitating disease and provide them with a chance at a better quality of life.

NAME	ADDRESS	PHONE/EMAIL	SIGNATURE
Jerry Miller	[redacted]	[redacted]	[redacted]
Joe Hunkele			
Sheed Younger			
[illegible]			
Brian Sabbats			
Brooke Dunmore			
Margaret [illegible]			
Jason Okin			
Van Brew			
Lois Frazier			
Carmen Fernandez			
Nancy Ricke			

Please print, sign and mail petition back by TUESDAY, MAY 26, 2015 to:
Citiva Medical LLC
7378 Amboy Road
Staten Island, NY 10307

PETITION IN SUPPORT OF CITIVA MEDICAL

New York State has enacted a limited medical marijuana program to help treat people with certain conditions, including Cancer, HIV/AIDS, ALS, Parkinson's Disease, MS, Spinal Cord Damage, Epilepsy, Dravet Syndrome, Inflammatory Bowel Syndrome, Huntington's Disease and Neuropathy.

This program, administered through **the Department of Health, will finally bring relief to many suffering patients in New York.** The DOH will grant 5 licenses to operate as registered organizations (RO) allowed to grow, extract and dispense medical marijuana.

Led by preeminent medical cannabis advocate and entrepreneur Josh Stanley, **Citiva Medical is a New York State company specializing in safe and effective products based on the latest advancements in cannabinoid medicine.** Citiva Medical's mission also includes conducting research and developing partnerships with universities, hospitals and institutions across the state to **establish New York as the global epicenter for cannabinoid research.**

ROs are not all created equal. Standardization is of the utmost importance so that patients will receive consistent and safe doses of their medication. Citiva Medical will be the industry leader based upon their stringent standardization policies and procedures. Citiva Medical has a team with **over 100 combined years of experience in clinical healthcare and the medicinal cannabis industry** and will bring safe and effective products to patients in New York.

I strongly support the New York State Department of Health granting RO status to Citiva Medical. As a responsible leader in this industry, Citiva Medical will bring safe quality medicine to patients suffering from chronic and debilitating disease and provide them with a chance at a better quality of life.

NAME	ADDRESS	PHONE/EMAIL	SIGNATURE
[illegible]	[redacted]	[redacted]	[illegible]
PATRICIA COSTA			[illegible]
Vanesa Kramer			[illegible]
Alex Brauw			[illegible]
Angelika Mistrel			[illegible]
Mary Beth Williams			[illegible]
Jerich Guerra			[illegible]
CARLOS CANELA			[illegible]
J. F. Hoffmann			[illegible]
A. Roenbaeng			[illegible]
Vincent Bradlo			[illegible]
ALICE RUSHTELL			[illegible]
Jonathan Shapiro			[illegible]

Please print, sign and mail petition back by TUESDAY, MAY 26, 2015 to:
Citiva Medical LLC
7378 Amboy Road
Staten Island, NY 10307

PETITION IN SUPPORT OF CITIVA MEDICAL

New York State has enacted a limited medical marijuana program to help treat people with certain conditions, including Cancer, HIV/AIDS, ALS, Parkinson's Disease, MS, Spinal Cord Damage, Epilepsy, Dravet Syndrome, Inflammatory Bowel Syndrome, Huntington's Disease and Neuropathy.

This program, administered through **the Department of Health, will finally bring relief to many suffering patients in New York.** The DOH will grant 5 licenses to operate as registered organizations (RO) allowed to grow, extract and dispense medical marijuana.

Led by preeminent medical cannabis advocate and entrepreneur Josh Stanley, **Citiva Medical is a New York State company specializing in safe and effective products based on the latest advancements in cannabinoid medicine.** Citiva Medical's mission also includes conducting research and developing partnerships with universities, hospitals and institutions across the state to **establish New York as the global epicenter for cannabinoid research.**

ROs are not all created equal. Standardization is of the utmost importance so that patients will receive consistent and safe doses of their medication. Citiva Medical will be the industry leader based upon their stringent standardization policies and procedures. Citiva Medical has a team with **over 100 combined years of experience in clinical healthcare and the medicinal cannabis industry** and will bring safe and effective products to patients in New York.

I strongly support the New York State Department of Health granting RO status to Citiva Medical. As a responsible leader in this industry, Citiva Medical will bring safe quality medicine to patients suffering from chronic and debilitating disease and provide them with a chance at a better quality of life.

NAME	ADDRESS	PHONE/EMAIL	SIGNATURE
Paul Jaffe	[redacted]		
PHILIPS, S HANNON			
Sabrina Guzman			
John Montanez			
Susan DeFonseca			
Keith Hamilton			Keith Hamilton
Alexandra ROMERO			
S. Hunter			
Anthony Wilson			A.W
Paula Solis			
Ana Viera			

Please print, sign and mail petition back by TUESDAY, MAY 26, 2015 to:
Citiva Medical LLC
7378 Amboy Road
Staten Island, NY 10307

PETITION IN SUPPORT OF CITIVA MEDICAL

New York State has enacted a limited medical marijuana program to help treat people with certain conditions, including Cancer, HIV/AIDS, ALS, Parkinson's Disease, MS, Spinal Cord Damage, Epilepsy, Dravet Syndrome, Inflammatory Bowel Syndrome, Huntington's Disease and Neuropathy.

This program, administered through **the Department of Health, will finally bring relief to many suffering patients in New York.** The DOH will grant 5 licenses to operate as registered organizations (RO) allowed to grow, extract and dispense medical marijuana.

Led by preeminent medical cannabis advocate and entrepreneur Josh Stanley, **Citiva Medical is a New York State company specializing in safe and effective products based on the latest advancements in cannabinoid medicine.** Citiva Medical's mission also includes conducting research and developing partnerships with universities, hospitals and institutions across the state to **establish New York as the global epicenter for cannabinoid research.**

ROs are not all created equal. Standardization is of the utmost importance so that patients will receive consistent and safe doses of their medication. Citiva Medical will be the industry leader based upon their stringent standardization policies and procedures. Citiva Medical has a team with **over 100 combined years of experience in clinical healthcare and the medicinal cannabis industry** and will bring safe and effective products to patients in New York.

I strongly support the New York State Department of Health granting RO status to Citiva Medical. As a responsible leader in this industry, Citiva Medical will bring safe quality medicine to patients suffering from chronic and debilitating disease and provide them with a chance at a better quality of life.

NAME	ADDRESS	PHONE/EMAIL	SIGNATURE
Christie Bedwell	[redacted]		
[illegible]			
Charles Thompson			
Andre Carroll			
1244R			
[illegible] Kenneth Alexander			
Greg Mach			

Please print, sign and mail petition back by TUESDAY, MAY 26, 2015 to:
Citiva Medical LLC
7378 Amboy Road
Staten Island, NY 10307

1

PETITION IN SUPPORT OF CITIVA MEDICAL

New York State has enacted a limited medical marijuana program to help treat people with certain conditions, including Cancer, HIV/AIDS, ALS, Parkinson's Disease, MS, Spinal Cord Damage, Epilepsy, Dravet Syndrome, Inflammatory Bowel Syndrome, Huntington's Disease and Neuropathy.

This program, administered through **the Department of Health, will finally bring relief to many suffering patients in New York.** The DOH will grant 5 licenses to operate as registered organizations (RO) allowed to grow, extract and dispense medical marijuana.

Led by preeminent medical cannabis advocate and entrepreneur Josh Stanley, **Citiva Medical is a New York State company specializing in safe and effective products based on the latest advancements in cannabinoid medicine.** Citiva Medical's mission also includes conducting research and developing partnerships with universities, hospitals and institutions across the state to **establish New York as the global epicenter for cannabinoid research.**

ROs are not all created equal. Standardization is of the utmost importance so that patients will receive consistent and safe doses of their medication. Citiva Medical will be the industry leader based upon their stringent standardization policies and procedures. Citiva Medical has a team with **over 100 combined years of experience in clinical healthcare and the medicinal cannabis industry** and will bring safe and effective products to patients in New York.

I strongly support the New York State Department of Health granting RO status to Citiva Medical. As a responsible leader in this industry, Citiva Medical will bring safe quality medicine to patients suffering from chronic and debilitating disease and provide them with a chance at a better quality of life.

NAME	ADDRESS	PHONE/EMAIL	SIGNATURE
[redacted]			

Please print, sign and mail petition back by TUESDAY, MAY 26, 2015 to:
Citiva Medical LLC
7378 Amboy Road
Staten Island, NY 10307

PETITION IN SUPPORT OF CITIVA MEDICAL

New York State has enacted a limited medical marijuana program to help treat people with certain conditions, including Cancer, HIV/AIDS, ALS, Parkinson's Disease, MS, Spinal Cord Damage, Epilepsy, Dravet Syndrome, Inflammatory Bowel Syndrome, Huntington's Disease and Neuropathy.

This program, administered through **the Department of Health, will finally bring relief to many suffering patients in New York.** The DOH will grant 5 licenses to operate as registered organizations (RO) allowed to grow, extract and dispense medical marijuana.

Led by preeminent medical cannabis advocate and entrepreneur Josh Stanley, **Citiva Medical is a New York State company specializing in safe and effective products based on the latest advancements in cannabinoid medicine.** Citiva Medical's mission also includes conducting research and developing partnerships with universities, hospitals and institutions across the state to **establish New York as the global epicenter for cannabinoid research.**

ROs are not all created equal. Standardization is of the utmost importance so that patients will receive consistent and safe doses of their medication. Citiva Medical will be the industry leader based upon their stringent standardization policies and procedures. Citiva Medical has a team with **over 100 combined years of experience in clinical healthcare and the medicinal cannabis industry** and will bring safe and effective products to patients in New York.

I strongly support the New York State Department of Health granting RO status to Citiva Medical. As a responsible leader in this industry, Citiva Medical will bring safe quality medicine to patients suffering from chronic and debilitating disease and provide them with a chance at a better quality of life.

NAME	ADDRESS	PHONE/EMAIL	SIGNATURE
Roberta Royzner	[redacted]		
Michael Pismenko			
Alice Tarnowsky			
Faina Feldman			
Ludmila Goon			
Arlen Cas			
Diana Kagan			
Arcelia Izrailova			
Daniel Marekhovsky			
Julian Koget			
Marissa Tarnowsky			
Alexey Rogozin			
Anna Liashenko			

Please print, sign and mail petition back by TUESDAY, MAY 26, 2015 to:
Citiva Medical LLC
7378 Amboy Road
Staten Island, NY 10307

PETITION IN SUPPORT OF CITIVA MEDICAL

New York State has enacted a limited medical marijuana program to help treat people with certain conditions, including Cancer, HIV/AIDS, ALS, Parkinson's Disease, MS, Spinal Cord Damage, Epilepsy, Dravet Syndrome, Inflammatory Bowel Syndrome, Huntington's Disease and Neuropathy.

This program, administered through **the Department of Health, will finally bring relief to many suffering patients in New York.** The DOH will grant 5 licenses to operate as registered organizations (RO) allowed to grow, extract and dispense medical marijuana.

Led by preeminent medical cannabis advocate and entrepreneur Josh Stanley, **Citiva Medical is a New York State company specializing in safe and effective products based on the latest advancements in cannabinoid medicine.** Citiva Medical's mission also includes conducting research and developing partnerships with universities, hospitals and institutions across the state to **establish New York as the global epicenter for cannabinoid research.**

ROs are not all created equal. Standardization is of the utmost importance so that patients will receive consistent and safe doses of their medication. Citiva Medical will be the industry leader based upon their stringent standardization policies and procedures. Citiva Medical has a team with **over 100 combined years of experience in clinical healthcare and the medicinal cannabis industry** and will bring safe and effective products to patients in New York.

I strongly support the New York State Department of Health granting RO status to Citiva Medical. As a responsible leader in this industry, Citiva Medical will bring safe quality medicine to patients suffering from chronic and debilitating disease and provide them with a chance at a better quality of life.

NAME	ADDRESS	PHONE/EMAIL	SIGNATURE
Marc Cohen	[redacted]	[redacted]	[redacted]
Lamel Overstreet	[redacted]	[redacted]	[redacted]
Argenis Morel	[redacted]	[redacted]	[redacted]
JANice DeBerry	[redacted]	[redacted]	[redacted]
Leon Alexander	[redacted]	[redacted]	[redacted]
Emma Shelton	[redacted]	[redacted]	[redacted]
Courtney McCeddy	[redacted]	[redacted]	[redacted]
Elvin Reyes	[redacted]	[redacted]	[redacted]
Lisa Christopher	[redacted]	[redacted]	[redacted]
Pamela Reed	[redacted]	[redacted]	[redacted]
Shanetha Roberson	[redacted]	[redacted]	[redacted]
Clarisse Floyd	[redacted]	[redacted]	[redacted]
Christine Luck	[redacted]	[redacted]	[redacted]

Please print, sign and mail petition back by TUESDAY, MAY 26, 2015 to:
Citiva Medical LLC
7378 Amboy Road
Staten Island, NY 10307

PETITION IN SUPPORT OF CITIVA MEDICAL

New York State has enacted a limited medical marijuana program to help treat people with certain conditions, including Cancer, HIV/AIDS, ALS, Parkinson's Disease, MS, Spinal Cord Damage, Epilepsy, Dravet Syndrome, Inflammatory Bowel Syndrome, Huntington's Disease and Neuropathy.

This program, administered through **the Department of Health, will finally bring relief to many suffering patients in New York.** The DOH will grant 5 licenses to operate as registered organizations (RO) allowed to grow, extract and dispense medical marijuana.

Led by preeminent medical cannabis advocate and entrepreneur Josh Stanley, **Citiva Medical is a New York State company specializing in safe and effective products based on the latest advancements in cannabinoid medicine.** Citiva Medical's mission also includes conducting research and developing partnerships with universities, hospitals and institutions across the state to **establish New York as the global epicenter for cannabinoid research.**

ROs are not all created equal. Standardization is of the utmost importance so that patients will receive consistent and safe doses of their medication. Citiva Medical will be the industry leader based upon their stringent standardization policies and procedures. Citiva Medical has a team with **over 100 combined years of experience in clinical healthcare and the medicinal cannabis industry** and will bring safe and effective products to patients in New York.

I strongly support the New York State Department of Health granting RO status to Citiva Medical. As a responsible leader in this industry, Citiva Medical will bring safe quality medicine to patients suffering from chronic and debilitating disease and provide them with a chance at a better quality of life.

NAME	ADDRESS	PHONE/EMAIL	SIGNATURE
James Davis	[redacted]		
Segundo Nieves			
Gerard Nolan			
Lee Bruno			
Gregory Arquette			
Jan Hodges			
Laura Ramirez			
Felix Hernandez			
Ricardo Agosto			
Ste Mal			
Wallace Ervin	[redacted]		
Ken Englert			

Please print, sign and mail petition back by TUESDAY, MAY 26, 2015 to:
Citiva Medical LLC
7378 Amboy Road
Staten Island, NY 10307

PETITION IN SUPPORT OF CITIVA MEDICAL

New York State has enacted a limited medical marijuana program to help treat people with certain conditions, including Cancer, HIV/AIDS, ALS, Parkinson's Disease, MS, Spinal Cord Damage, Epilepsy, Dravet Syndrome, Inflammatory Bowel Syndrome, Huntington's Disease and Neuropathy.

This program, administered through **the Department of Health, will finally bring relief to many suffering patients in New York.** The DOH will grant 5 licenses to operate as registered organizations (RO) allowed to grow, extract and dispense medical marijuana.

Led by preeminent medical cannabis advocate and entrepreneur Josh Stanley, **Citiva Medical is a New York State company specializing in safe and effective products based on the latest advancements in cannabinoid medicine.** Citiva Medical's mission also includes conducting research and developing partnerships with universities, hospitals and institutions across the state to **establish New York as the global epicenter for cannabinoid research.**

ROs are not all created equal. Standardization is of the utmost importance so that patients will receive consistent and safe doses of their medication. Citiva Medical will be the industry leader based upon their stringent standardization policies and procedures. Citiva Medical has a team with **over 100 combined years of experience in clinical healthcare and the medicinal cannabis industry** and will bring safe and effective products to patients in New York.

I strongly support the New York State Department of Health granting RO status to Citiva Medical. As a responsible leader in this industry, Citiva Medical will bring safe quality medicine to patients suffering from chronic and debilitating disease and provide them with a chance at a better quality of life.

NAME	ADDRESS	PHONE/EMAIL	SIGNATURE
Jacqueline Jacobs	[redacted]		
Tara Figueras			
Anita Banks			
Terence Channer			
Erica Durkin			

Please print, sign and mail petition back by TUESDAY, MAY 26, 2015 to:
Citiva Medical LLC
7378 Amboy Road
Staten Island, NY 10307

PETITION IN SUPPORT OF CITIVA MEDICAL

New York State has enacted a limited medical marijuana program to help treat people with certain conditions, including Cancer, HIV/AIDS, ALS, Parkinson's Disease, MS, Spinal Cord Damage, Epilepsy, Dravet Syndrome, Inflammatory Bowel Syndrome, Huntington's Disease and Neuropathy.

This program, administered through **the Department of Health, will finally bring relief to many suffering patients in New York.** The DOH will grant 5 licenses to operate as registered organizations (RO) allowed to grow, extract and dispense medical marijuana.

Led by preeminent medical cannabis advocate and entrepreneur Josh Stanley, **Citiva Medical is a New York State company specializing in safe and effective products based on the latest advancements in cannabinoid medicine.** Citiva Medical's mission also includes conducting research and developing partnerships with universities, hospitals and institutions across the state to **establish New York as the global epicenter for cannabinoid research.**

ROs are not all created equal. Standardization is of the utmost importance so that patients will receive consistent and safe doses of their medication. Citiva Medical will be the industry leader based upon their stringent standardization policies and procedures. Citiva Medical has a team with **over 100 combined years of experience in clinical healthcare and the medicinal cannabis industry** and will bring safe and effective products to patients in New York.

I strongly support the New York State Department of Health granting RO status to Citiva Medical. As a responsible leader in this industry, Citiva Medical will bring safe quality medicine to patients suffering from chronic and debilitating disease and provide them with a chance at a better quality of life.

NAME	ADDRESS	PHONE/EMAIL	SIGNATURE
Heather Pascal	[redacted]		
Ciel 1 Palmer			
[illegible]			
Cheri Fulton			
Margaret Daniels			
Manoli Rodriguez			
William Jones			
Linda Clinton			
Samuel Rodriguez			
Jacob Brothers			
[illegible]			
[illegible]			
Renee Washington			

Please print, sign and mail petition back by TUESDAY, MAY 26, 2015 to:
Citiva Medical LLC
7378 Amboy Road
Staten Island, NY 10307

PETITION IN SUPPORT OF CITIVA MEDICAL

New York State has enacted a limited medical marijuana program to help treat people with certain conditions, including Cancer, HIV/AIDS, ALS, Parkinson's Disease, MS, Spinal Cord Damage, Epilepsy, Dravet Syndrome, Inflammatory Bowel Syndrome, Huntington's Disease and Neuropathy.

This program, administered through **the Department of Health, will finally bring relief to many suffering patients in New York.** The DOH will grant 5 licenses to operate as registered organizations (RO) allowed to grow, extract and dispense medical marijuana.

Led by preeminent medical cannabis advocate and entrepreneur Josh Stanley, **Citiva Medical is a New York State company specializing in safe and effective products based on the latest advancements in cannabinoid medicine.** Citiva Medical's mission also includes conducting research and developing partnerships with universities, hospitals and institutions across the state to **establish New York as the global epicenter for cannabinoid research.**

ROs are not all created equal. Standardization is of the utmost importance so that patients will receive consistent and safe doses of their medication. Citiva Medical will be the industry leader based upon their stringent standardization policies and procedures. Citiva Medical has a team with **over 100 combined years of experience in clinical healthcare and the medicinal cannabis industry** and will bring safe and effective products to patients in New York.

I strongly support the New York State Department of Health granting RO status to Citiva Medical. As a responsible leader in this industry, Citiva Medical will bring safe quality medicine to patients suffering from chronic and debilitating disease and provide them with a chance at a better quality of life.

NAME	ADDRESS	PHONE/EMAIL	SIGNATURE
Silvia Herbert	[redacted]		Silvia S. Herbert
Clifford Saunders			C. Saunders
Christakis Thanasoulas			
Carolyn Rosario			
Chasity Fillmore			
Luis Santiago			
Darrell Winn			
Shawnica Cadlett			
Athanasia Mendez			
Sharon Degoute			
Meryl Holgate			
Melvin Johnson			Gloria Johnson
Jacqueline Quintero			

Please print, sign and mail petition back by TUESDAY, MAY 26, 2015 to:

Citiva Medical LLC
7378 Amboy Road
Staten Island, NY 10307

Joel E. Perez [redacted]

PETITION IN SUPPORT OF CITIVA MEDICAL

New York State has enacted a limited medical marijuana program to help treat people with certain conditions, including Cancer, HIV/AIDS, ALS, Parkinson's Disease, MS, Spinal Cord Damage, Epilepsy, Dravet Syndrome, Inflammatory Bowel Syndrome, Huntington's Disease and Neuropathy.

This program, administered through **the Department of Health, will finally bring relief to many suffering patients in New York.** The DOH will grant 5 licenses to operate as registered organizations (RO) allowed to grow, extract and dispense medical marijuana.

Led by preeminent medical cannabis advocate and entrepreneur Josh Stanley, **Citiva Medical is a New York State company specializing in safe and effective products based on the latest advancements in cannabinoid medicine.** Citiva Medical's mission also includes conducting research and developing partnerships with universities, hospitals and institutions across the state to **establish New York as the global epicenter for cannabinoid research.**

ROs are not all created equal. Standardization is of the utmost importance so that patients will receive consistent and safe doses of their medication. Citiva Medical will be the industry leader based upon their stringent standardization policies and procedures. Citiva Medical has a team with **over 100 combined years of experience in clinical healthcare and the medicinal cannabis industry** and will bring safe and effective products to patients in New York.

I strongly support the New York State Department of Health granting RO status to Citiva Medical. As a responsible leader in this industry, Citiva Medical will bring safe quality medicine to patients suffering from chronic and debilitating disease and provide them with a chance at a better quality of life.

NAME	ADDRESS	PHONE/EMAIL	SIGNATURE
Joel E perez	[redacted]	[redacted]	Joel E Perez
PHILIP S GROVES	[redacted]	[redacted]	Philip S
Elena L Owens	[redacted]	[redacted]	NY 11693
Ashley Cruz	[redacted]	[redacted]	
141	[redacted]	[redacted]	
Camila Cruz	[redacted]	[redacted]	
CHRISTINE MORRIS	[redacted]	[redacted]	
Nana Cruz	[redacted]	[redacted]	
Rhonda Overstreet	[redacted]	[redacted]	Rhonda Overstreet
Peggy Morris	[redacted]	[redacted]	P. Morris
Christopher Cruz	[redacted]	[redacted]	C. Cruz
Juan Cruz	[redacted]	[redacted]	J. Cruz
Nakita Thorton	[redacted]	[redacted]	N. Thorton

Please print, sign and mail petition back by TUESDAY, MAY 26, 2015 to:
Citiva Medical LLC
7378 Amboy Road
Staten Island, NY 10307

PETITION IN SUPPORT OF CITIVA MEDICAL

New York State has enacted a limited medical marijuana program to help treat people with certain conditions, including Cancer, HIV/AIDS, ALS, Parkinson's Disease, MS, Spinal Cord Damage, Epilepsy, Dravet Syndrome, Inflammatory Bowel Syndrome, Huntington's Disease and Neuropathy.

This program, administered through **the Department of Health, will finally bring relief to many suffering patients in New York.** The DOH will grant 5 licenses to operate as registered organizations (RO) allowed to grow, extract and dispense medical marijuana.

Led by preeminent medical cannabis advocate and entrepreneur Josh Stanley, **Citiva Medical is a New York State company specializing in safe and effective products based on the latest advancements in cannabinoid medicine.** Citiva Medical's mission also includes conducting research and developing partnerships with universities, hospitals and institutions across the state to **establish New York as the global epicenter for cannabinoid research.**

ROs are not all created equal. Standardization is of the utmost importance so that patients will receive consistent and safe doses of their medication. Citiva Medical will be the industry leader based upon their stringent standardization policies and procedures. Citiva Medical has a team with **over 100 combined years of experience in clinical healthcare and the medicinal cannabis industry** and will bring safe and effective products to patients in New York.

I strongly support the New York State Department of Health granting RO status to Citiva Medical. As a responsible leader in this industry, Citiva Medical will bring safe quality medicine to patients suffering from chronic and debilitating disease and provide them with a chance at a better quality of life.

NAME	ADDRESS	PHONE/EMAIL	SIGNATURE
[illegible]	[redacted]	[redacted]	[signature]
Maggie Lopez			Maggie Lopez
Magali Duclerc			Magali Duclerc
Shirley Evans			
Robert Lee			
Liam Donovan			[signature]
Candida Welsh			
John Welsh			
Patricia Welsh			
Jean Walsh			
dolores, porter			

Please print, sign and mail petition back by TUESDAY, MAY 26, 2015 to:
Citiva Medical LLC
7378 Amboy Road
Staten Island, NY 10307

PETITION IN SUPPORT OF CITIVA MEDICAL

New York State has enacted a limited medical marijuana program to help treat people with certain conditions, including Cancer, HIV/AIDS, ALS, Parkinson's Disease, MS, Spinal Cord Damage, Epilepsy, Dravet Syndrome, Inflammatory Bowel Syndrome, Huntington's Disease and Neuropathy.

This program, administered through **the Department of Health, will finally bring relief to many suffering patients in New York.** The DOH will grant 5 licenses to operate as registered organizations (RO) allowed to grow, extract and dispense medical marijuana.

Led by preeminent medical cannabis advocate and entrepreneur Josh Stanley, **Citiva Medical is a New York State company specializing in safe and effective products based on the latest advancements in cannabinoid medicine.** Citiva Medical's mission also includes conducting research and developing partnerships with universities, hospitals and institutions across the state to **establish New York as the global epicenter for cannabinoid research.**

ROs are not all created equal. Standardization is of the utmost importance so that patients will receive consistent and safe doses of their medication. Citiva Medical will be the industry leader based upon their stringent standardization policies and procedures. Citiva Medical has a team with **over 100 combined years of experience in clinical healthcare and the medicinal cannabis industry** and will bring safe and effective products to patients in New York.

I strongly support the New York State Department of Health granting RO status to Citiva Medical. As a responsible leader in this industry, Citiva Medical will bring safe quality medicine to patients suffering from chronic and debilitating disease and provide them with a chance at a better quality of life.

NAME	ADDRESS	PHONE/EMAIL	SIGNATURE
EDWARD FERRARA	[redacted]		Edward Ferrara
MENETTE KARATHS			Menette Karaths
Katrina Bookman			Katrina Bookman
Blanca Rojas			Blanca Rojas
Rosemary Durrah			Rosemary Durrah
Edwin Silard			Edwin Silard
Victor Robles			
Dora Budahonte			Dora B
Shaquesia Gibbs			Shaquesia Gibbs
Ida Bowden			Ida Bowden
Evelyn Ortiz			E.O.
Fatima Young			

Please print, sign and mail petition back by TUESDAY, MAY 26, 2015 to:
Citiva Medical LLC
7378 Amboy Road
Staten Island, NY 10307

PETITION IN SUPPORT OF CITIVA MEDICAL

New York State has enacted a limited medical marijuana program to help treat people with certain conditions, including Cancer, HIV/AIDS, ALS, Parkinson's Disease, MS, Spinal Cord Damage, Epilepsy, Dravet Syndrome, Inflammatory Bowel Syndrome, Huntington's Disease and Neuropathy.

This program, administered through **the Department of Health, will finally bring relief to many suffering patients in New York.** The DOH will grant 5 licenses to operate as registered organizations (RO) allowed to grow, extract and dispense medical marijuana.

Led by preeminent medical cannabis advocate and entrepreneur Josh Stanley, **Citiva Medical is a New York State company specializing in safe and effective products based on the latest advancements in cannabinoid medicine.** Citiva Medical's mission also includes conducting research and developing partnerships with universities, hospitals and institutions across the state to **establish New York as the global epicenter for cannabinoid research.**

ROs are not all created equal. Standardization is of the utmost importance so that patients will receive consistent and safe doses of their medication. Citiva Medical will be the industry leader based upon their stringent standardization policies and procedures. Citiva Medical has a team with **over 100 combined years of experience in clinical healthcare and the medicinal cannabis industry** and will bring safe and effective products to patients in New York.

I strongly support the New York State Department of Health granting RO status to Citiva Medical. As a responsible leader in this industry, Citiva Medical will bring safe quality medicine to patients suffering from chronic and debilitating disease and provide them with a chance at a better quality of life.

NAME	ADDRESS	PHONE/EMAIL	SIGNATURE
[redacted]			

Please print, sign and mail petition back by TUESDAY, MAY 26, 2015 to:
Citiva Medical LLC
7378 Amboy Road
Staten Island, NY 10307

PETITION IN SUPPORT OF CITIVA MEDICAL

New York State has enacted a limited medical marijuana program to help treat people with certain conditions, including Cancer, HIV/AIDS, ALS, Parkinson's Disease, MS, Spinal Cord Damage, Epilepsy, Dravet Syndrome, Inflammatory Bowel Syndrome, Huntington's Disease and Neuropathy.

This program, administered through **the Department of Health, will finally bring relief to many suffering patients in New York.** The DOH will grant 5 licenses to operate as registered organizations (RO) allowed to grow, extract and dispense medical marijuana.

Led by preeminent medical cannabis advocate and entrepreneur Josh Stanley, **Citiva Medical is a New York State company specializing in safe and effective products based on the latest advancements in cannabinoid medicine.** Citiva Medical's mission also includes conducting research and developing partnerships with universities, hospitals and institutions across the state to **establish New York as the global epicenter for cannabinoid research.**

ROs are not all created equal. Standardization is of the utmost importance so that patients will receive consistent and safe doses of their medication. Citiva Medical will be the industry leader based upon their stringent standardization policies and procedures. Citiva Medical has a team with **over 100 combined years of experience in clinical healthcare and the medicinal cannabis industry** and will bring safe and effective products to patients in New York.

I strongly support the New York State Department of Health granting RO status to Citiva Medical. As a responsible leader in this industry, Citiva Medical will bring safe quality medicine to patients suffering from chronic and debilitating disease and provide them with a chance at a better quality of life.

NAME	ADDRESS	PHONE/EMAIL	SIGNATURE
Jose Cancel	[redacted]	[redacted]	
Monica Vittorini			
Charmane Garcia			
SHARA JOHNSON CUMBERBATCH			
Christopher Fano			
MELINDA MOLNAR			
Edward Dunn			
Regina Stewart			
Madrid Delane			
Kathryn Fracasso			
Melanie Pike			
Edwin Quinones			
Sophia Naccari			

Please print, sign and mail petition back by TUESDAY, MAY 26, 2015 to:
Citiva Medical LLC
7378 Amboy Road
Staten Island, NY 10307

PETITION IN SUPPORT OF CITIVA MEDICAL

New York State has enacted a limited medical marijuana program to help treat people with certain conditions, including Cancer, HIV/AIDS, ALS, Parkinson's Disease, MS, Spinal Cord Damage, Epilepsy, Dravet Syndrome, Inflammatory Bowel Syndrome, Huntington's Disease and Neuropathy.

This program, administered through **the Department of Health, will finally bring relief to many suffering patients in New York.** The DOH will grant 5 licenses to operate as registered organizations (RO) allowed to grow, extract and dispense medical marijuana.

Led by preeminent medical cannabis advocate and entrepreneur Josh Stanley, **Citiva Medical is a New York State company specializing in safe and effective products based on the latest advancements in cannabinoid medicine.** Citiva Medical's mission also includes conducting research and developing partnerships with universities, hospitals and institutions across the state to **establish New York as the global epicenter for cannabinoid research.**

ROs are not all created equal. Standardization is of the utmost importance so that patients will receive consistent and safe doses of their medication. Citiva Medical will be the industry leader based upon their stringent standardization policies and procedures. Citiva Medical has a team with **over 100 combined years of experience in clinical healthcare and the medicinal cannabis industry** and will bring safe and effective products to patients in New York.

I strongly support the New York State Department of Health granting RO status to Citiva Medical. As a responsible leader in this industry, Citiva Medical will bring safe quality medicine to patients suffering from chronic and debilitating disease and provide them with a chance at a better quality of life.

NAME	ADDRESS	PHONE/EMAIL	SIGNATURE
Regina Benjamin	[redacted]	[redacted]	
John Henderson III			
Cindy Neely			
Juan Carlos Velasquez			
Elizabeth Hennessey			
Christopher Tinc			

Please print, sign and mail petition back by TUESDAY, MAY 26, 2015 to:
Citiva Medical LLC
7378 Amboy Road
Staten Island, NY 10307

PETITION IN SUPPORT OF CITIVA MEDICAL

New York State has enacted a limited medical marijuana program to help treat people with certain conditions, including Cancer, HIV/AIDS, ALS, Parkinson's Disease, MS, Spinal Cord Damage, Epilepsy, Dravet Syndrome, Inflammatory Bowel Syndrome, Huntington's Disease and Neuropathy.

This program, administered through **the Department of Health, will finally bring relief to many suffering patients in New York.** The DOH will grant 5 licenses to operate as registered organizations (RO) allowed to grow, extract and dispense medical marijuana.

Led by preeminent medical cannabis advocate and entrepreneur Josh Stanley, **Citiva Medical is a New York State company specializing in safe and effective products based on the latest advancements in cannabinoid medicine.** Citiva Medical's mission also includes conducting research and developing partnerships with universities, hospitals and institutions across the state to **establish New York as the global epicenter for cannabinoid research.**

ROs are not all created equal. Standardization is of the utmost importance so that patients will receive consistent and safe doses of their medication. Citiva Medical will be the industry leader based upon their stringent standardization policies and procedures. Citiva Medical has a team with **over 100 combined years of experience in clinical healthcare and the medicinal cannabis industry** and will bring safe and effective products to patients in New York.

I strongly support the New York State Department of Health granting RO status to Citiva Medical. As a responsible leader in this industry, Citiva Medical will bring safe quality medicine to patients suffering from chronic and debilitating disease and provide them with a chance at a better quality of life.

NAME	ADDRESS	PHONE/EMAIL	SIGNATURE
Caitlin Ferguson	[redacted]	[redacted]	[redacted]
[redacted]	[redacted]	[redacted]	[redacted]
[redacted]	[redacted]	[redacted]	[redacted]
[redacted]	[redacted]	[redacted]	[redacted]
[redacted]	[redacted]	[redacted]	[redacted]
[redacted]	[redacted]	[redacted]	[redacted]
[redacted]	[redacted]	[redacted]	[redacted]
[redacted]	[redacted]	[redacted]	[redacted]
[redacted]	[redacted]	[redacted]	[redacted]
[redacted]	[redacted]	[redacted]	[redacted]
[redacted]	[redacted]	[redacted]	[redacted]
[redacted]	[redacted]	[redacted]	[redacted]
[redacted]	[redacted]	[redacted]	[redacted]
[redacted]	[redacted]	[redacted]	[redacted]
[redacted]	[redacted]	[redacted]	[redacted]
[redacted]	[redacted]	[redacted]	[redacted]
[redacted]	[redacted]	[redacted]	[redacted]
[redacted]	[redacted]	[redacted]	[redacted]
[redacted]	[redacted]	[redacted]	[redacted]
[redacted]	[redacted]	[redacted]	[redacted]

Please print, sign and mail petition back by TUESDAY, MAY 26, 2015 to:
Citiva Medical LLC
7378 Amboy Road
Staten Island, NY 10307

Petition in Support of Citiva Medical

New York State has enacted a limited medical marijuana program to help treat people with certain conditions, including Cancer, HIV/AIDS, ALS, Parkinson's Disease, MS, Spinal Cord Damage, Epilepsy, Dravet Syndrome, Inflammatory Bowel Syndrome, Huntington's Disease and Neuropathy.

This program, administered through **the Department of Health, will finally bring relief to many suffering patients in New York.** The DOH will grant 5 licenses to operate as registered organizations (RO) allowed to grow, extract and dispense medical marijuana.

Led by preeminent medical cannabis advocate and entrepreneur Josh Stanley, **Citiva Medical is a New York State company specializing in safe and effective products based on the latest advancements in cannabinoid medicine.** Citiva Medical's mission also includes conducting research and developing partnerships with universities, hospitals and institutions across the state to **establish New York as the global epicenter for cannabinoid research.**

ROs are not all created equal. Standardization is of the utmost importance so that patients will receive consistent and safe doses of their medication. Citiva Medical will be the industry leader based upon their stringent standardization policies and procedures. Citiva Medical has a team with **over 100 combined years of experience in clinical healthcare and the medicinal cannabis industry** and will bring safe and effective products to patients in New York.

I strongly support the New York State Department of Health granting RO status to Citiva Medical. As a responsible leader in this industry, Citiva Medical will bring safe quality medicine to patients suffering from chronic and debilitating disease and provide them with a chance at a better quality of life.

NAME	[redacted]	SIGNATURE
Grabsky Fauya [redacted]	[redacted]	
Elena Svyatskay [redacted]	[redacted]	
Ilya Royfe	[redacted]	
Roza Glazman	[redacted]	[redacted]
Mezi Stavolshchikova	[redacted]	
Gorbach	[redacted]	
Goldenshtein	[redacted]	

Please print, sign and mail petition back by TUESDAY, MAY 26, 2015 to:
Citiva Medical LLC
7378 Amboy Road
Staten Island, NY 10307

PETITION IN SUPPORT OF CITIVA MEDICAL

New York State has enacted a limited medical marijuana program to help treat people with certain conditions, including Cancer, HIV/AIDS, ALS, Parkinson's Disease, MS, Spinal Cord Damage, Epilepsy, Dravet Syndrome, Inflammatory Bowel Syndrome, Huntington's Disease and Neuropathy.

This program, administered through **the Department of Health, will finally bring relief to many suffering patients in New York.** The DOH will grant 5 licenses to operate as registered organizations (RO) allowed to grow, extract and dispense medical marijuana.

Led by preeminent medical cannabis advocate and entrepreneur Josh Stanley, **Citiva Medical is a New York State company specializing in safe and effective products based on the latest advancements in cannabinoid medicine.** Citiva Medical's mission also includes conducting research and developing partnerships with universities, hospitals and institutions across the state to **establish New York as the global epicenter for cannabinoid research.**

ROs are not all created equal. Standardization is of the utmost importance so that patients will receive consistent and safe doses of their medication. Citiva Medical will be the industry leader based upon their stringent standardization policies and procedures. Citiva Medical has a team with **over 100 combined years of experience in clinical healthcare and the medicinal cannabis industry** and will bring safe and effective products to patients in New York.

I strongly support the New York State Department of Health granting RO status to Citiva Medical. As a responsible leader in this industry, Citiva Medical will bring safe quality medicine to patients suffering from chronic and debilitating disease and provide them with a chance at a better quality of life.

NAME	ADDRESS	PHONE/EMAIL	SIGNATURE
[illegible]	[redacted]		
Mary Tripp			
Harold Ashenberg			
Merilee Klein			
Cliff Klein			
TSIRKIN Leon			
Alecia Flast			
[illegible]			
[illegible]			
[illegible]			
Anna			

Please print, sign and mail petition back by TUESDAY, MAY 26, 2015 to:
Citiva Medical LLC
7378 Amboy Road
Staten Island, NY 10307

PETITION IN SUPPORT OF CITIVA MEDICAL

New York State has enacted a limited medical marijuana program to help treat people with certain conditions, including Cancer, HIV/AIDS, ALS, Parkinson's Disease, MS, Spinal Cord Damage, Epilepsy, Dravet Syndrome, Inflammatory Bowel Syndrome, Huntington's Disease and Neuropathy.

This program, administered through **the Department of Health, will finally bring relief to many suffering patients in New York.** The DOH will grant 5 licenses to operate as registered organizations (RO) allowed to grow, extract and dispense medical marijuana.

Led by preeminent medical cannabis advocate and entrepreneur Josh Stanley, **Citiva Medical is a New York State company specializing in safe and effective products based on the latest advancements in cannabinoid medicine.** Citiva Medical's mission also includes conducting research and developing partnerships with universities, hospitals and institutions across the state to **establish New York as the global epicenter for cannabinoid research.**

ROs are not all created equal. Standardization is of the utmost importance so that patients will receive consistent and safe doses of their medication. Citiva Medical will be the industry leader based upon their stringent standardization policies and procedures. Citiva Medical has a team with **over 100 combined years of experience in clinical healthcare and the medicinal cannabis industry** and will bring safe and effective products to patients in New York.

I strongly support the New York State Department of Health granting RO status to Citiva Medical. As a responsible leader in this industry, Citiva Medical will bring safe quality medicine to patients suffering from chronic and debilitating disease and provide them with a chance at a better quality of life.

NAME	ADDRESS	PHONE/EMAIL	SIGNATURE
[illegible]	[redacted]		[illegible]

Please print, sign and mail petition back by TUESDAY, MAY 26, 2015 to:
Citiva Medical LLC
7378 Amboy Road
Staten Island, NY 10307

PETITION IN SUPPORT OF CITIVA MEDICAL

New York State has enacted a limited medical marijuana program to help treat people with certain conditions, including Cancer, HIV/AIDS, ALS, Parkinson's Disease, MS, Spinal Cord Damage, Epilepsy, Dravet Syndrome, Inflammatory Bowel Syndrome, Huntington's Disease and Neuropathy.

This program, administered through **the Department of Health, will finally bring relief to many suffering patients in New York.** The DOH will grant 5 licenses to operate as registered organizations (RO) allowed to grow, extract and dispense medical marijuana.

Led by preeminent medical cannabis advocate and entrepreneur Josh Stanley, **Citiva Medical is a New York State company specializing in safe and effective products based on the latest advancements in cannabinoid medicine.** Citiva Medical's mission also includes conducting research and developing partnerships with universities, hospitals and institutions across the state to **establish New York as the global epicenter for cannabinoid research.**

ROs are not all created equal. Standardization is of the utmost importance so that patients will receive consistent and safe doses of their medication. Citiva Medical will be the industry leader based upon their stringent standardization policies and procedures. Citiva Medical has a team with **over 100 combined years of experience in clinical healthcare and the medicinal cannabis industry** and will bring safe and effective products to patients in New York.

I strongly support the New York State Department of Health granting RO status to Citiva Medical. As a responsible leader in this industry, Citiva Medical will bring safe quality medicine to patients suffering from chronic and debilitating disease and provide them with a chance at a better quality of life.

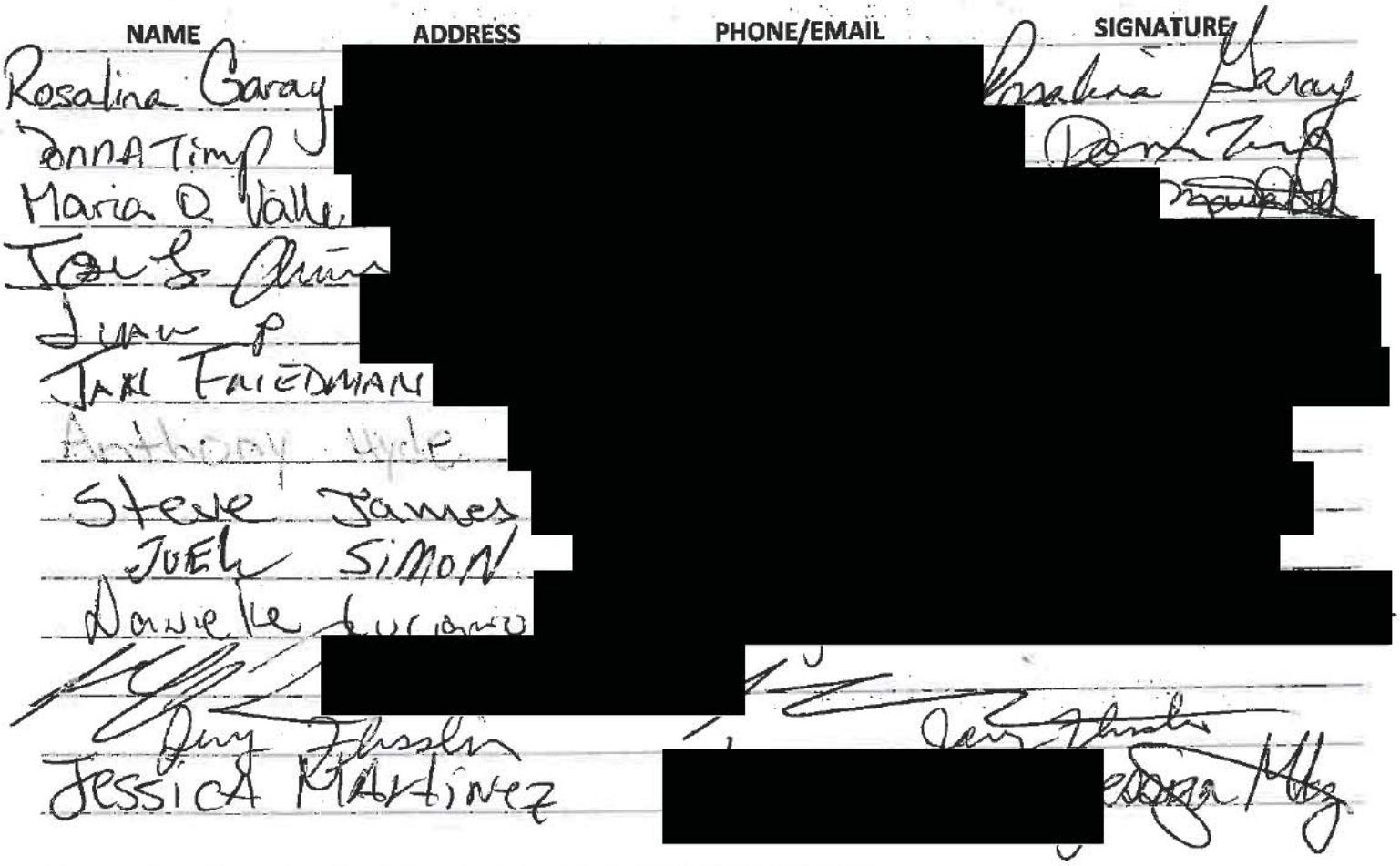

Please print, sign and mail petition back by TUESDAY, MAY 26, 2015 to:
Citiva Medical LLC
7378 Amboy Road
Staten Island, NY 10307

PETITION IN SUPPORT OF CITIVA MEDICAL

New York State has enacted a limited medical marijuana program to help treat people with certain conditions, including Cancer, HIV/AIDS, ALS, Parkinson's Disease, MS, Spinal Cord Damage, Epilepsy, Dravet Syndrome, Inflammatory Bowel Syndrome, Huntington's Disease and Neuropathy.

This program, administered through **the Department of Health, will finally bring relief to many suffering patients in New York.** The DOH will grant 5 licenses to operate as registered organizations (RO) allowed to grow, extract and dispense medical marijuana.

Led by preeminent medical cannabis advocate and entrepreneur Josh Stanley, **Citiva Medical is a New York State company specializing in safe and effective products based on the latest advancements in cannabinoid medicine.** Citiva Medical's mission also includes conducting research and developing partnerships with universities, hospitals and institutions across the state to **establish New York as the global epicenter for cannabinoid research.**

ROs are not all created equal. Standardization is of the utmost importance so that patients will receive consistent and safe doses of their medication. Citiva Medical will be the industry leader based upon their stringent standardization policies and procedures. Citiva Medical has a team with **over 100 combined years of experience in clinical healthcare and the medicinal cannabis industry** and will bring safe and effective products to patients in New York.

I strongly support the New York State Department of Health granting RO status to Citiva Medical. As a responsible leader in this industry, Citiva Medical will bring safe quality medicine to patients suffering from chronic and debilitating disease and provide them with a chance at a better quality of life.

NAME	ADDRESS	PHONE/EMAIL	SIGNATURE
[redacted]	[redacted]	[redacted]	[redacted]

Please print, sign and mail petition back by TUESDAY, MAY 26, 2015 to:
Citiva Medical LLC
7378 Amboy Road
Staten Island, NY 10307

PETITION IN SUPPORT OF CITIVA MEDICAL

New York State has enacted a limited medical marijuana program to help treat people with certain conditions, including Cancer, HIV/AIDS, ALS, Parkinson's Disease, MS, Spinal Cord Damage, Epilepsy, Dravet Syndrome, Inflammatory Bowel Syndrome, Huntington's Disease and Neuropathy.

This program, administered through **the Department of Health, will finally bring relief to many suffering patients in New York.** The DOH will grant 5 licenses to operate as registered organizations (RO) allowed to grow, extract and dispense medical marijuana.

Led by preeminent medical cannabis advocate and entrepreneur Josh Stanley, **Citiva Medical is a New York State company specializing in safe and effective products based on the latest advancements in cannabinoid medicine.** Citiva Medical's mission also includes conducting research and developing partnerships with universities, hospitals and institutions across the state to **establish New York as the global epicenter for cannabinoid research.**

ROs are not all created equal. Standardization is of the utmost importance so that patients will receive consistent and safe doses of their medication. Citiva Medical will be the industry leader based upon their stringent standardization policies and procedures. Citiva Medical has a team with **over 100 combined years of experience in clinical healthcare and the medicinal cannabis industry** and will bring safe and effective products to patients in New York.

I strongly support the New York State Department of Health granting RO status to Citiva Medical. As a responsible leader in this industry, Citiva Medical will bring safe quality medicine to patients suffering from chronic and debilitating disease and provide them with a chance at a better quality of life.

NAME	ADDRESS	PHONE/EMAIL	SIGNATURE
[illegible]	[redacted]	[redacted]	[illegible]

Please print, sign and mail petition back by TUESDAY, MAY 26, 2015 to:
Citiva Medical LLC
7378 Amboy Road
Staten Island, NY 10307

PETITION IN SUPPORT OF CITIVA MEDICAL

New York State has enacted a limited medical marijuana program to help treat people with certain conditions, including Cancer, HIV/AIDS, ALS, Parkinson's Disease, MS, Spinal Cord Damage, Epilepsy, Dravet Syndrome, Inflammatory Bowel Syndrome, Huntington's Disease and Neuropathy.

This program, administered through **the Department of Health, will finally bring relief to many suffering patients in New York.** The DOH will grant 5 licenses to operate as registered organizations (RO) allowed to grow, extract and dispense medical marijuana.

Led by preeminent medical cannabis advocate and entrepreneur Josh Stanley, **Citiva Medical is a New York State company specializing in safe and effective products based on the latest advancements in cannabinoid medicine.** Citiva Medical's mission also includes conducting research and developing partnerships with universities, hospitals and institutions across the state to **establish New York as the global epicenter for cannabinoid research.**

ROs are not all created equal. Standardization is of the utmost importance so that patients will receive consistent and safe doses of their medication. Citiva Medical will be the industry leader based upon their stringent standardization policies and procedures. Citiva Medical has a team with **over 100 combined years of experience in clinical healthcare and the medicinal cannabis industry** and will bring safe and effective products to patients in New York.

I strongly support the New York State Department of Health granting RO status to Citiva Medical. As a responsible leader in this industry, Citiva Medical will bring safe quality medicine to patients suffering from chronic and debilitating disease and provide them with a chance at a better quality of life.

NAME	ADDRESS	PHONE/EMAIL	SIGNATURE
Alberda P	[redacted]		
ALhuenteR			
Michaels B			
Mishor L			
voller Z.			
MNovich R.			
Mcnab Milton			
Antonovsky V.			
ALfant M			
Moise Willy			
Miller F			
Tepper M			
Tkach [illegible]			

Please print, sign and mail petition back by TUESDAY, MAY 26, 2015 to:
Citiva Medical LLC
7378 Amboy Road
Staten Island, NY 10307

PETITION IN SUPPORT OF CITIVA MEDICAL

New York State has enacted a limited medical marijuana program to help treat people with certain conditions, including Cancer, HIV/AIDS, ALS, Parkinson's Disease, MS, Spinal Cord Damage, Epilepsy, Dravet Syndrome, Inflammatory Bowel Syndrome, Huntington's Disease and Neuropathy.

This program, administered through **the Department of Health, will finally bring relief to many suffering patients in New York.** The DOH will grant 5 licenses to operate as registered organizations (RO) allowed to grow, extract and dispense medical marijuana.

Led by preeminent medical cannabis advocate and entrepreneur Josh Stanley, **Citiva Medical is a New York State company specializing in safe and effective products based on the latest advancements in cannabinoid medicine.** Citiva Medical's mission also includes conducting research and developing partnerships with universities, hospitals and institutions across the state to **establish New York as the global epicenter for cannabinoid research.**

ROs are not all created equal. Standardization is of the utmost importance so that patients will receive consistent and safe doses of their medication. Citiva Medical will be the industry leader based upon their stringent standardization policies and procedures. Citiva Medical has a team with **over 100 combined years of experience in clinical healthcare and the medicinal cannabis industry** and will bring safe and effective products to patients in New York.

I strongly support the New York State Department of Health granting RO status to Citiva Medical. As a responsible leader in this industry, Citiva Medical will bring safe quality medicine to patients suffering from chronic and debilitating disease and provide them with a chance at a better quality of life.

NAME	ADDRESS	PHONE/EMAIL	SIGNATURE
[redacted]	[redacted]	[redacted]	[redacted]

Please print, sign and mail petition back by TUESDAY, MAY 26, 2015 to:
Citiva Medical LLC
7378 Amboy Road
Staten Island, NY 10307

PETITION IN SUPPORT OF CITIVA MEDICAL

New York State has enacted a limited medical marijuana program to help treat people with certain conditions, including Cancer, HIV/AIDS, ALS, Parkinson's Disease, MS, Spinal Cord Damage, Epilepsy, Dravet Syndrome, Inflammatory Bowel Syndrome, Huntington's Disease and Neuropathy.

This program, administered through **the Department of Health, will finally bring relief to many suffering patients in New York.** The DOH will grant 5 licenses to operate as registered organizations (RO) allowed to grow, extract and dispense medical marijuana.

Led by preeminent medical cannabis advocate and entrepreneur Josh Stanley, **Citiva Medical is a New York State company specializing in safe and effective products based on the latest advancements in cannabinoid medicine.** Citiva Medical's mission also includes conducting research and developing partnerships with universities, hospitals and institutions across the state to **establish New York as the global epicenter for cannabinoid research.**

ROs are not all created equal. Standardization is of the utmost importance so that patients will receive consistent and safe doses of their medication. Citiva Medical will be the industry leader based upon their stringent standardization policies and procedures. Citiva Medical has a team with **over 100 combined years of experience in clinical healthcare and the medicinal cannabis industry** and will bring safe and effective products to patients in New York.

I strongly support the New York State Department of Health granting RO status to Citiva Medical. As a responsible leader in this industry, Citiva Medical will bring safe quality medicine to patients suffering from chronic and debilitating disease and provide them with a chance at a better quality of life.

NAME	ADDRESS	PHONE/EMAIL	SIGNATURE
AMIROVA ZINA	[redacted]		
ALBO MARIA			
ADIS ELVEDINA			
DORSUK MILA			
BRAVO LUIS			
RIVA RIVA			
KHASIN YURI			
RIVA RIVA			
ROMAN GREG			
ROSA BRAVO			
REED GLORIA			
REMIX DENISE			
ADELMAN FLORA			

Please print, sign and mail petition back by TUESDAY, MAY 26, 2015 to:
Citiva Medical LLC
7378 Amboy Road
Staten Island, NY 10307

PETITION IN SUPPORT OF CITIVA MEDICAL

New York State has enacted a limited medical marijuana program to help treat people with certain conditions, including Cancer, HIV/AIDS, ALS, Parkinson's Disease, MS, Spinal Cord Damage, Epilepsy, Dravet Syndrome, Inflammatory Bowel Syndrome, Huntington's Disease and Neuropathy.

This program, administered through **the Department of Health, will finally bring relief to many suffering patients in New York.** The DOH will grant 5 licenses to operate as registered organizations (RO) allowed to grow, extract and dispense medical marijuana.

Led by preeminent medical cannabis advocate and entrepreneur Josh Stanley, **Citiva Medical is a New York State company specializing in safe and effective products based on the latest advancements in cannabinoid medicine.** Citiva Medical's mission also includes conducting research and developing partnerships with universities, hospitals and institutions across the state to **establish New York as the global epicenter for cannabinoid research.**

ROs are not all created equal. Standardization is of the utmost importance so that patients will receive consistent and safe doses of their medication. Citiva Medical will be the industry leader based upon their stringent standardization policies and procedures. Citiva Medical has a team with **over 100 combined years of experience in clinical healthcare and the medicinal cannabis industry** and will bring safe and effective products to patients in New York.

I strongly support the New York State Department of Health granting RO status to Citiva Medical. As a responsible leader in this industry, Citiva Medical will bring safe quality medicine to patients suffering from chronic and debilitating disease and provide them with a chance at a better quality of life.

NAME	ADDRESS	PHONE/EMAIL	SIGNATURE
Temple B	[redacted]		
Talal P			
Braneman A			
Zaklis E			
Zaborsky A			
Vanler B			
Bolonvin E			
Brenan P			

Please print, sign and mail petition back by TUESDAY, MAY 26, 2015 to:
Citiva Medical LLC
7378 Amboy Road
Staten Island, NY 10307

PETITION IN SUPPORT OF CITIVA MEDICAL

New York State has enacted a limited medical marijuana program to help treat people with certain conditions, including Cancer, HIV/AIDS, ALS, Parkinson's Disease, MS, Spinal Cord Damage, Epilepsy, Dravet Syndrome, Inflammatory Bowel Syndrome, Huntington's Disease and Neuropathy.

This program, administered through **the Department of Health, will finally bring relief to many suffering patients in New York.** The DOH will grant 5 licenses to operate as registered organizations (RO) allowed to grow, extract and dispense medical marijuana.

Led by preeminent medical cannabis advocate and entrepreneur Josh Stanley, **Citiva Medical is a New York State company specializing in safe and effective products based on the latest advancements in cannabinoid medicine.** Citiva Medical's mission also includes conducting research and developing partnerships with universities, hospitals and institutions across the state to **establish New York as the global epicenter for cannabinoid research.**

ROs are not all created equal. Standardization is of the utmost importance so that patients will receive consistent and safe doses of their medication. Citiva Medical will be the industry leader based upon their stringent standardization policies and procedures. Citiva Medical has a team with **over 100 combined years of experience in clinical healthcare and the medicinal cannabis industry** and will bring safe and effective products to patients in New York.

I strongly support the New York State Department of Health granting RO status to Citiva Medical. As a responsible leader in this industry, Citiva Medical will bring safe quality medicine to patients suffering from chronic and debilitating disease and provide them with a chance at a better quality of life.

NAME	ADDRESS	PHONE/EMAIL	SIGNATURE
[redacted]	[redacted]	[redacted]	[redacted]

Please print, sign and mail petition back by TUESDAY, MAY 26, 2015 to:
Citiva Medical LLC
7378 Amboy Road
Staten Island, NY 10307

PETITION IN SUPPORT OF CITIVA MEDICAL

New York State has enacted a limited medical marijuana program to help treat people with certain conditions, including Cancer, HIV/AIDS, ALS, Parkinson's Disease, MS, Spinal Cord Damage, Epilepsy, Dravet Syndrome, Inflammatory Bowel Syndrome, Huntington's Disease and Neuropathy.

This program, administered through **the Department of Health, will finally bring relief to many suffering patients in New York.** The DOH will grant 5 licenses to operate as registered organizations (RO) allowed to grow, extract and dispense medical marijuana.

Led by preeminent medical cannabis advocate and entrepreneur Josh Stanley, **Citiva Medical is a New York State company specializing in safe and effective products based on the latest advancements in cannabinoid medicine.** Citiva Medical's mission also includes conducting research and developing partnerships with universities, hospitals and institutions across the state to **establish New York as the global epicenter for cannabinoid research.**

ROs are not all created equal. Standardization is of the utmost importance so that patients will receive consistent and safe doses of their medication. Citiva Medical will be the industry leader based upon their stringent standardization policies and procedures. Citiva Medical has a team with **over 100 combined years of experience in clinical healthcare and the medicinal cannabis industry** and will bring safe and effective products to patients in New York.

I strongly support the New York State Department of Health granting RO status to Citiva Medical. As a responsible leader in this industry, Citiva Medical will bring safe quality medicine to patients suffering from chronic and debilitating disease and provide them with a chance at a better quality of life.

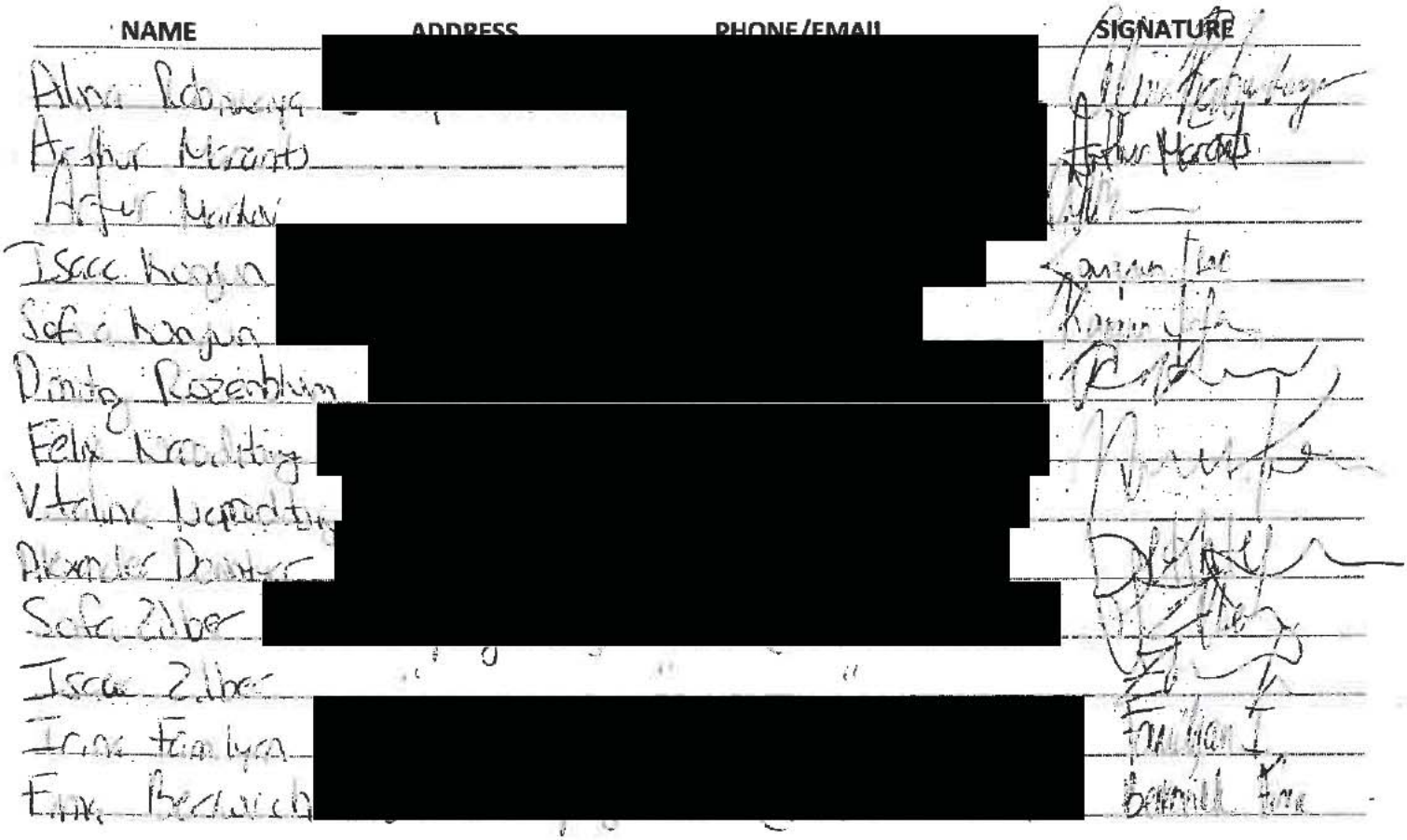

Please print, sign and mail petition back by TUESDAY, MAY 26, 2015 to:
Citiva Medical LLC
7378 Amboy Road
Staten Island, NY 10307

PETITION IN SUPPORT OF CITIVA MEDICAL

New York State has enacted a limited medical marijuana program to help treat people with certain conditions, including Cancer, HIV/AIDS, ALS, Parkinson's Disease, MS, Spinal Cord Damage, Epilepsy, Dravet Syndrome, Inflammatory Bowel Syndrome, Huntington's Disease and Neuropathy.

This program, administered through **the Department of Health, will finally bring relief to many suffering patients in New York.** The DOH will grant 5 licenses to operate as registered organizations (RO) allowed to grow, extract and dispense medical marijuana.

Led by preeminent medical cannabis advocate and entrepreneur Josh Stanley, **Citiva Medical is a New York State company specializing in safe and effective products based on the latest advancements in cannabinoid medicine.** Citiva Medical's mission also includes conducting research and developing partnerships with universities, hospitals and institutions across the state to **establish New York as the global epicenter for cannabinoid research.**

ROs are not all created equal. Standardization is of the utmost importance so that patients will receive consistent and safe doses of their medication. Citiva Medical will be the industry leader based upon their stringent standardization policies and procedures. Citiva Medical has a team with **over 100 combined years of experience in clinical healthcare and the medicinal cannabis industry** and will bring safe and effective products to patients in New York.

I strongly support the New York State Department of Health granting RO status to Citiva Medical. As a responsible leader in this industry, Citiva Medical will bring safe quality medicine to patients suffering from chronic and debilitating disease and provide them with a chance at a better quality of life.

NAME	ADDRESS	PHONE/EMAIL	SIGNATURE
Ronnie [illegible]	[redacted]	[redacted]	
Zadi [illegible]			
Ainat			
Anthony Cant			
Langdon Heimbeck			
Anna Lashenko			
Daniel			
Oscar			
Tony Andrade			
Boris Gerzon			
Svetlana Bogdan			
Mickee Elefant			
Irina Wiseman			

Please print, sign and mail petition back by TUESDAY, MAY 26, 2015 to:
Citiva Medical LLC
7378 Amboy Road
Staten Island, NY 10307

PETITION IN SUPPORT OF CITIVA MEDICAL

New York State has enacted a limited medical marijuana program to help treat people with certain conditions, including Cancer, HIV/AIDS, ALS, Parkinson's Disease, MS, Spinal Cord Damage, Epilepsy, Dravet Syndrome, Inflammatory Bowel Syndrome, Huntington's Disease and Neuropathy.

This program, administered through **the Department of Health, will finally bring relief to many suffering patients in New York.** The DOH will grant 5 licenses to operate as registered organizations (RO) allowed to grow, extract and dispense medical marijuana.

Led by preeminent medical cannabis advocate and entrepreneur Josh Stanley, **Citiva Medical is a New York State company specializing in safe and effective products based on the latest advancements in cannabinoid medicine.** Citiva Medical's mission also includes conducting research and developing partnerships with universities, hospitals and institutions across the state to **establish New York as the global epicenter for cannabinoid research.**

ROs are not all created equal. Standardization is of the utmost importance so that patients will receive consistent and safe doses of their medication. Citiva Medical will be the industry leader based upon their stringent standardization policies and procedures. Citiva Medical has a team with **over 100 combined years of experience in clinical healthcare and the medicinal cannabis industry** and will bring safe and effective products to patients in New York.

I strongly support the New York State Department of Health granting RO status to Citiva Medical. As a responsible leader in this industry, Citiva Medical will bring safe quality medicine to patients suffering from chronic and debilitating disease and provide them with a chance at a better quality of life.

NAME	ADDRESS	PHONE/EMAIL	SIGNATURE
Marina Karapet	[redacted]		
Daniel Khodorkovsky			
Moira Rabinovich			
Sam Pinkhasov			
Marina Faygenbaum			
Elina Adashkin			
Kristina Tinasky			
Eli Cohen			
Serge Tinasky			
Marina Tinasky			
Carmit Cohen			
Sofiya Sinelnik			
Igor Smolianski			

Please print, sign and mail petition back by TUESDAY, MAY 26, 2015 to:
Citiva Medical LLC
7378 Amboy Road
Staten Island, NY 10307

PETITION IN SUPPORT OF CITIVA MEDICAL

New York State has enacted a limited medical marijuana program to help treat people with certain conditions, including Cancer, HIV/AIDS, ALS, Parkinson's Disease, MS, Spinal Cord Damage, Epilepsy, Dravet Syndrome, Inflammatory Bowel Syndrome, Huntington's Disease and Neuropathy.

This program, administered through **the Department of Health, will finally bring relief to many suffering patients in New York.** The DOH will grant 5 licenses to operate as registered organizations (RO) allowed to grow, extract and dispense medical marijuana.

Led by preeminent medical cannabis advocate and entrepreneur Josh Stanley, **Citiva Medical is a New York State company specializing in safe and effective products based on the latest advancements in cannabinoid medicine.** Citiva Medical's mission also includes conducting research and developing partnerships with universities, hospitals and institutions across the state to **establish New York as the global epicenter for cannabinoid research.**

ROs are not all created equal. Standardization is of the utmost importance so that patients will receive consistent and safe doses of their medication. Citiva Medical will be the industry leader based upon their stringent standardization policies and procedures. Citiva Medical has a team with **over 100 combined years of experience in clinical healthcare and the medicinal cannabis industry** and will bring safe and effective products to patients in New York.

I strongly support the New York State Department of Health granting RO status to Citiva Medical. As a responsible leader in this industry, Citiva Medical will bring safe quality medicine to patients suffering from chronic and debilitating disease and provide them with a chance at a better quality of life.

NAME	ADDRESS	PHONE/EMAIL	SIGNATURE
Brian Moyer	[redacted]	[redacted]	
Victor Zozaya			
Brian Graham			
Lisa Topken			
Lyubov Inderbaum			
Ilya Shafir			
Yevgenya Inderbaum			
Arkady Veksler			
Anatoly Veksler			
Alexander Veksler			
Shaun Dyer			
Polina Lerner			
Ilana Shafir			

Please print, sign and mail petition back by TUESDAY, MAY 26, 2015 to:
Citiva Medical LLC
7378 Amboy Road
Staten Island, NY 10307

PETITION IN SUPPORT OF CITIVA MEDICAL

New York State has enacted a limited medical marijuana program to help treat people with certain conditions, including Cancer, HIV/AIDS, ALS, Parkinson's Disease, MS, Spinal Cord Damage, Epilepsy, Dravet Syndrome, Inflammatory Bowel Syndrome, Huntington's Disease and Neuropathy.

This program, administered through **the Department of Health, will finally bring relief to many suffering patients in New York.** The DOH will grant 5 licenses to operate as registered organizations (RO) allowed to grow, extract and dispense medical marijuana.

Led by preeminent medical cannabis advocate and entrepreneur Josh Stanley, **Citiva Medical is a New York State company specializing in safe and effective products based on the latest advancements in cannabinoid medicine.** Citiva Medical's mission also includes conducting research and developing partnerships with universities, hospitals and institutions across the state to **establish New York as the global epicenter for cannabinoid research.**

ROs are not all created equal. Standardization is of the utmost importance so that patients will receive consistent and safe doses of their medication. Citiva Medical will be the industry leader based upon their stringent standardization policies and procedures. Citiva Medical has a team with **over 100 combined years of experience in clinical healthcare and the medicinal cannabis industry** and will bring safe and effective products to patients in New York.

I strongly support the New York State Department of Health granting RO status to Citiva Medical. As a responsible leader in this industry, Citiva Medical will bring safe quality medicine to patients suffering from chronic and debilitating disease and provide them with a chance at a better quality of life.

NAME	ADDRESS	PHONE/EMAIL	SIGNATURE
Abramovich, Aron	[redacted]		
Margarita Gatashvili			
Alan Yusufov			
Zaur Yusufov			
Stalin Rojas			
Rosiee Avila			
Danny Avila			
Weiner Bea			
Agnes Rebecca			
flores fonron			
Mila fixman			
Sherman Joan			
Jason Sherman			

Please print, sign and mail petition back by TUESDAY, MAY 26, 2015 to:
Citiva Medical LLC
7378 Amboy Road
Staten Island, NY 10307

PETITION IN SUPPORT OF CITIVA MEDICAL

New York State has enacted a limited medical marijuana program to help treat people with certain conditions, including Cancer, HIV/AIDS, ALS, Parkinson's Disease, MS, Spinal Cord Damage, Epilepsy, Dravet Syndrome, Inflammatory Bowel Syndrome, Huntington's Disease and Neuropathy.

This program, administered through **the Department of Health, will finally bring relief to many suffering patients in New York.** The DOH will grant 5 licenses to operate as registered organizations (RO) allowed to grow, extract and dispense medical marijuana.

Led by preeminent medical cannabis advocate and entrepreneur Josh Stanley, **Citiva Medical is a New York State company specializing in safe and effective products based on the latest advancements in cannabinoid medicine.** Citiva Medical's mission also includes conducting research and developing partnerships with universities, hospitals and institutions across the state to **establish New York as the global epicenter for cannabinoid research.**

ROs are not all created equal. Standardization is of the utmost importance so that patients will receive consistent and safe doses of their medication. Citiva Medical will be the industry leader based upon their stringent standardization policies and procedures. Citiva Medical has a team with **over 100 combined years of experience in clinical healthcare and the medicinal cannabis industry** and will bring safe and effective products to patients in New York.

I strongly support the New York State Department of Health granting RO status to Citiva Medical. As a responsible leader in this industry, Citiva Medical will bring safe quality medicine to patients suffering from chronic and debilitating disease and provide them with a chance at a better quality of life.

NAME	ADDRESS	PHONE/EMAIL	SIGNATURE
Michelle Moré	[redacted]	[redacted]	
Rita			
Max Kushnir			
Gala Kushnir			
Felix Kushnir			
Arnold			
Elizabeth Clason			
Nick Malina			
Greg Rosenberg			
Tamara Filandiaskaya			
VIAD GILSMAN			
Metaygorodskaya Yelena			
Abramzon, Aron			

Please print, sign and mail petition back by TUESDAY, MAY 26, 2015 to:
Citiva Medical LLC
7378 Amboy Road
Staten Island, NY 10307

PETITION IN SUPPORT OF CITIVA MEDICAL

New York State has enacted a limited medical marijuana program to help treat people with certain conditions, including Cancer, HIV/AIDS, ALS, Parkinson's Disease, MS, Spinal Cord Damage, Epilepsy, Dravet Syndrome, Inflammatory Bowel Syndrome, Huntington's Disease and Neuropathy.

This program, administered through **the Department of Health, will finally bring relief to many suffering patients in New York.** The DOH will grant 5 licenses to operate as registered organizations (RO) allowed to grow, extract and dispense medical marijuana.

Led by preeminent medical cannabis advocate and entrepreneur Josh Stanley, **Citiva Medical is a New York State company specializing in safe and effective products based on the latest advancements in cannabinoid medicine.** Citiva Medical's mission also includes conducting research and developing partnerships with universities, hospitals and institutions across the state to **establish New York as the global epicenter for cannabinoid research.**

ROs are not all created equal. Standardization is of the utmost importance so that patients will receive consistent and safe doses of their medication. Citiva Medical will be the industry leader based upon their stringent standardization policies and procedures. Citiva Medical has a team with **over 100 combined years of experience in clinical healthcare and the medicinal cannabis industry** and will bring safe and effective products to patients in New York.

I strongly support the New York State Department of Health granting RO status to Citiva Medical. As a responsible leader in this industry, Citiva Medical will bring safe quality medicine to patients suffering from chronic and debilitating disease and provide them with a chance at a better quality of life.

NAME	ADDRESS	PHONE/EMAIL	SIGNATURE
Natalya Maliyk	[redacted]	[redacted]	
Julia Nakhimovsky	[redacted]	[redacted]	trumpairt8@yahoo
Paula Jacklyn Mussman	[redacted]	[redacted]	
Michelle Kaner	[redacted]	[redacted]	
Scott Feggarone	[redacted]	[redacted]	

Please print, sign and mail petition back by TUESDAY, MAY 26, 2015 to:
Citiva Medical LLC
7378 Amboy Road
Staten Island, NY 10307

PETITION IN SUPPORT OF CITIVA MEDICAL

New York State has enacted a limited medical marijuana program to help treat people with certain conditions, including Cancer, HIV/AIDS, ALS, Parkinson's Disease, MS, Spinal Cord Damage, Epilepsy, Dravet Syndrome, Inflammatory Bowel Syndrome, Huntington's Disease and Neuropathy.

This program, administered through **the Department of Health, will finally bring relief to many suffering patients in New York.** The DOH will grant 5 licenses to operate as registered organizations (RO) allowed to grow, extract and dispense medical marijuana.

Led by preeminent medical cannabis advocate and entrepreneur Josh Stanley, **Citiva Medical is a New York State company specializing in safe and effective products based on the latest advancements in cannabinoid medicine.** Citiva Medical's mission also includes conducting research and developing partnerships with universities, hospitals and institutions across the state to **establish New York as the global epicenter for cannabinoid research.**

ROs are not all created equal. Standardization is of the utmost importance so that patients will receive consistent and safe doses of their medication. Citiva Medical will be the industry leader based upon their stringent standardization policies and procedures. Citiva Medical has a team with **over 100 combined years of experience in clinical healthcare and the medicinal cannabis industry** and will bring safe and effective products to patients in New York.

I strongly support the New York State Department of Health granting RO status to Citiva Medical. As a responsible leader in this industry, Citiva Medical will bring safe quality medicine to patients suffering from chronic and debilitating disease and provide them with a chance at a better quality of life.

NAME	ADDRESS	PHONE/EMAIL	SIGNATURE
Petr Shamandyuk	[redacted]		[signature]
Nana Mercedes	[redacted]		[signature]
Zinaida Abramovich	[redacted]		[signature]
Jeanette Estimea	89 Ave 2 [redacted]		[signature]
Tkachenko Mikhail	[redacted]	718-373-18-28	[signature]
Bronislava Kuslovsky	[redacted]		[signature]
Povolotskiy Vitaliy	[redacted]		
Gancher Lilia	[redacted]		[signature]
William Maldonado	[redacted]		[signature]
Gerald DiDonato	[redacted]		[signature]
Larisa [illegible]			
Irina Familyan			[signature]
Syptsova Myra			[signature]

Please print, sign and mail petition back by TUESDAY, MAY 26, 2015 to:
Citiva Medical LLC
7378 Amboy Road
Staten Island, NY 10307

PETITION IN SUPPORT OF CITIVA MEDICAL

New York State has enacted a limited medical marijuana program to help treat people with certain conditions, including Cancer, HIV/AIDS, ALS, Parkinson's Disease, MS, Spinal Cord Damage, Epilepsy, Dravet Syndrome, Inflammatory Bowel Syndrome, Huntington's Disease and Neuropathy.

This program, administered through **the Department of Health, will finally bring relief to many suffering patients in New York.** The DOH will grant 5 licenses to operate as registered organizations (RO) allowed to grow, extract and dispense medical marijuana.

Led by preeminent medical cannabis advocate and entrepreneur Josh Stanley, **Citiva Medical is a New York State company specializing in safe and effective products based on the latest advancements in cannabinoid medicine.** Citiva Medical's mission also includes conducting research and developing partnerships with universities, hospitals and institutions across the state to **establish New York as the global epicenter for cannabinoid research.**

ROs are not all created equal. Standardization is of the utmost importance so that patients will receive consistent and safe doses of their medication. Citiva Medical will be the industry leader based upon their stringent standardization policies and procedures. Citiva Medical has a team with **over 100 combined years of experience in clinical healthcare and the medicinal cannabis industry** and will bring safe and effective products to patients in New York.

I strongly support the New York State Department of Health granting RO status to Citiva Medical. As a responsible leader in this industry, Citiva Medical will bring safe quality medicine to patients suffering from chronic and debilitating disease and provide them with a chance at a better quality of life.

NAME	ADDRESS	PHONE/EMAIL	SIGNATURE
Tonya Heney	[redacted]		
MAGDALENA MAXINE			
Polina Abramov			
Yana Avital			
Roddy Bernard			
Robert Ritz			
CLARENCE LESLIE			
FELIX Narodetsky.			
Adam Chan			
Lisa Kunel			
VITALINA NARODITSKY			
FILYA SLIDOVKER			

Please print, sign and mail petition back by TUESDAY, MAY 26, 2015 to:
Citiva Medical LLC
7378 Amboy Road
Staten Island, NY 10307

PETITION IN SUPPORT OF CITIVA MEDICAL

New York State has enacted a limited medical marijuana program to help treat people with certain conditions, including Cancer, HIV/AIDS, ALS, Parkinson's Disease, MS, Spinal Cord Damage, Epilepsy, Dravet Syndrome, Inflammatory Bowel Syndrome, Huntington's Disease and Neuropathy.

This program, administered through **the Department of Health, will finally bring relief to many suffering patients in New York.** The DOH will grant 5 licenses to operate as registered organizations (RO) allowed to grow, extract and dispense medical marijuana.

Led by preeminent medical cannabis advocate and entrepreneur Josh Stanley, **Citiva Medical is a New York State company specializing in safe and effective products based on the latest advancements in cannabinoid medicine.** Citiva Medical's mission also includes conducting research and developing partnerships with universities, hospitals and institutions across the state to **establish New York as the global epicenter for cannabinoid research.**

ROs are not all created equal. Standardization is of the utmost importance so that patients will receive consistent and safe doses of their medication. Citiva Medical will be the industry leader based upon their stringent standardization policies and procedures. Citiva Medical has a team with **over 100 combined years of experience in clinical healthcare and the medicinal cannabis industry** and will bring safe and effective products to patients in New York.

I strongly support the New York State Department of Health granting RO status to Citiva Medical. As a responsible leader in this industry, Citiva Medical will bring safe quality medicine to patients suffering from chronic and debilitating disease and provide them with a chance at a better quality of life.

NAME	ADDRESS	PHONE/EMAIL	SIGNATURE
Larisa Turaieva	[redacted]		
Tracheck Alexsandera			
Zkarnifer Zoya Krivitskaya			
Chris McKee			
Krasavskaya, Yelena			
Regina Turaieva			
Farah Magdin			
Marilyn Grinshpun			
Faye Cai			
Sima Gurber			
Natalia Sokolovskaya			

Please print, sign and mail petition back by TUESDAY, MAY 26, 2015 to:
Citiva Medical LLC
7378 Amboy Road
Staten Island, NY 10307

PETITION IN SUPPORT OF CITIVA MEDICAL

New York State has enacted a limited medical marijuana program to help treat people with certain conditions, including Cancer, HIV/AIDS, ALS, Parkinson's Disease, MS, Spinal Cord Damage, Epilepsy, Dravet Syndrome, Inflammatory Bowel Syndrome, Huntington's Disease and Neuropathy.

This program, administered through **the Department of Health, will finally bring relief to many suffering patients in New York.** The DOH will grant 5 licenses to operate as registered organizations (RO) allowed to grow, extract and dispense medical marijuana.

Led by preeminent medical cannabis advocate and entrepreneur Josh Stanley, **Citiva Medical is a New York State company specializing in safe and effective products based on the latest advancements in cannabinoid medicine.** Citiva Medical's mission also includes conducting research and developing partnerships with universities, hospitals and institutions across the state to **establish New York as the global epicenter for cannabinoid research.**

ROs are not all created equal. Standardization is of the utmost importance so that patients will receive consistent and safe doses of their medication. Citiva Medical will be the industry leader based upon their stringent standardization policies and procedures. Citiva Medical has a team with **over 100 combined years of experience in clinical healthcare and the medicinal cannabis industry** and will bring safe and effective products to patients in New York.

I strongly support the New York State Department of Health granting RO status to Citiva Medical. As a responsible leader in this industry, Citiva Medical will bring safe quality medicine to patients suffering from chronic and debilitating disease and provide them with a chance at a better quality of life.

NAME	ADDRESS	PHONE/EMAIL	SIGNATURE
Leonid Vaynguz	[redacted]		
[redacted]	[redacted]		
[redacted]	[redacted]		
[redacted]	[redacted]		
[redacted]	[redacted]		
[redacted]	[redacted]		
[redacted]	[redacted]		
[redacted]	[redacted]		
[redacted]	[redacted]		
[redacted]	[redacted]		
[redacted]	[redacted]		
[redacted]	[redacted]		
[redacted]	[redacted]		
[redacted]	[redacted]		
[redacted]	[redacted]		

Please print, sign and mail petition back by TUESDAY, MAY 26, 2015 to:
Citiva Medical LLC
7378 Amboy Road
Staten Island, NY 10307

PETITION IN SUPPORT OF CITIVA MEDICAL

New York State has enacted a limited medical marijuana program to help treat people with certain conditions, including Cancer, HIV/AIDS, ALS, Parkinson's Disease, MS, Spinal Cord Damage, Epilepsy, Dravet Syndrome, Inflammatory Bowel Syndrome, Huntington's Disease and Neuropathy.

This program, administered through **the Department of Health, will finally bring relief to many suffering patients in New York.** The DOH will grant 5 licenses to operate as registered organizations (RO) allowed to grow, extract and dispense medical marijuana.

Led by preeminent medical cannabis advocate and entrepreneur Josh Stanley, **Citiva Medical is a New York State company specializing in safe and effective products based on the latest advancements in cannabinoid medicine.** Citiva Medical's mission also includes conducting research and developing partnerships with universities, hospitals and institutions across the state to **establish New York as the global epicenter for cannabinoid research.**

ROs are not all created equal. Standardization is of the utmost importance so that patients will receive consistent and safe doses of their medication. Citiva Medical will be the industry leader based upon their stringent standardization policies and procedures. Citiva Medical has a team with **over 100 combined years of experience in clinical healthcare and the medicinal cannabis industry** and will bring safe and effective products to patients in New York.

I strongly support the New York State Department of Health granting RO status to Citiva Medical. As a responsible leader in this industry, Citiva Medical will bring safe quality medicine to patients suffering from chronic and debilitating disease and provide them with a chance at a better quality of life.

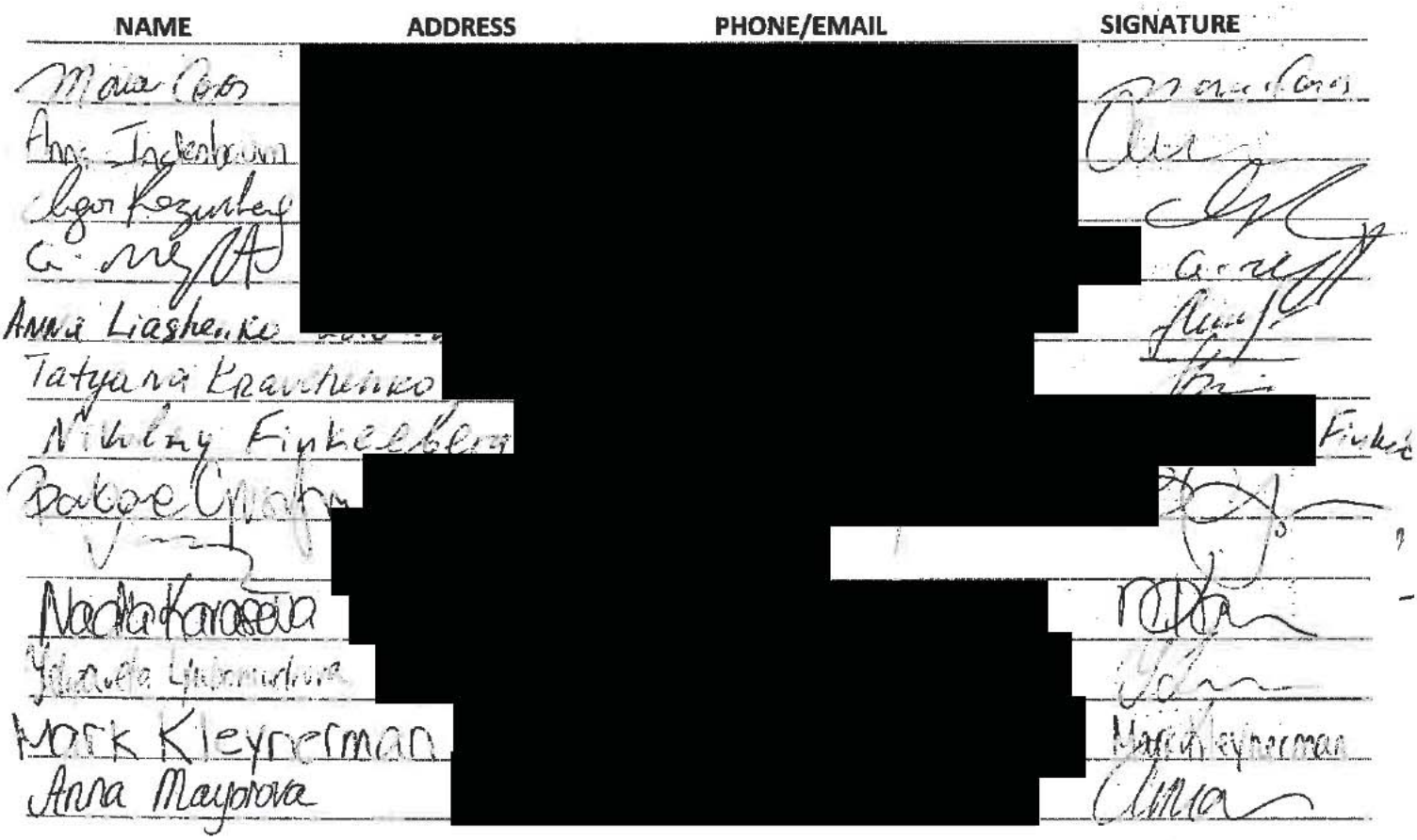

Please print, sign and mail petition back by TUESDAY, MAY 26, 2015 to:
Citiva Medical LLC
7378 Amboy Road
Staten Island, NY 10307

Petition in Support of Citiva Medical

New York State has enacted a limited medical marijuana program to help treat people with certain conditions, including Cancer, HIV/AIDS, ALS, Parkinson's Disease, MS, Spinal Cord Damage, Epilepsy, Dravet Syndrome, Inflammatory Bowel Syndrome, Huntington's Disease and Neuropathy.

This program, administered through **the Department of Health, will finally bring relief to many suffering patients in New York.** The DOH will grant 5 licenses to operate as registered organizations (RO) allowed to grow, extract and dispense medical marijuana.

Led by preeminent medical cannabis advocate and entrepreneur Josh Stanley, **Citiva Medical is a New York State company specializing in safe and effective products based on the latest advancements in cannabinoid medicine.** Citiva Medical's mission also includes conducting research and developing partnerships with universities, hospitals and institutions across the state to **establish New York as the global epicenter for cannabinoid research.**

ROs are not all created equal. Standardization is of the utmost importance so that patients will receive consistent and safe doses of their medication. Citiva Medical will be the industry leader based upon their stringent standardization policies and procedures. Citiva Medical has a team with **over 100 combined years of experience in clinical healthcare and the medicinal cannabis industry** and will bring safe and effective products to patients in New York.

I strongly support the New York State Department of Health granting RO status to Citiva Medical. As a responsible leader in this industry, Citiva Medical will bring safe quality medicine to patients suffering from chronic and debilitating disease and provide them with a chance at a better quality of life.

NAME	ADDRESS	PHONE/EMAIL	SIGNATURE
Inna [illegible]	[redacted]		[signature]
Vlada Fedorenco	[redacted]		[signature]
Frieda Eksler	[redacted]		[signature]
Vera Tkachenko	[redacted]		[signature]
A. Lozovinsky	[redacted]		
Lidiya Poltavtseva	[redacted]		
Michael Kim	[redacted]		[signature]
Alex Tarkadsky [illegible]	[redacted]		[signature]
Bianna Maidannik	[redacted]		[signature]
Arthur Maidannik	[redacted]		[signature]
Howard Werner	[redacted]		[signature]
Gretchen Somerville	[redacted]		
Aaron Katz	[redacted]		[signature]

Please print, sign and mail petition back by TUESDAY, MAY 26, 2015 to:
Citiva Medical LLC
7378 Amboy Road
Staten Island, NY 10307

PETITION IN SUPPORT OF CITIVA MEDICAL

New York State has enacted a limited medical marijuana program to help treat people with certain conditions, including Cancer, HIV/AIDS, ALS, Parkinson's Disease, MS, Spinal Cord Damage, Epilepsy, Dravet Syndrome, Inflammatory Bowel Syndrome, Huntington's Disease and Neuropathy.

This program, administered through **the Department of Health, will finally bring relief to many suffering patients in New York.** The DOH will grant 5 licenses to operate as registered organizations (RO) allowed to grow, extract and dispense medical marijuana.

Led by preeminent medical cannabis advocate and entrepreneur Josh Stanley, **Citiva Medical is a New York State company specializing in safe and effective products based on the latest advancements in cannabinoid medicine.** Citiva Medical's mission also includes conducting research and developing partnerships with universities, hospitals and institutions across the state to **establish New York as the global epicenter for cannabinoid research.**

ROs are not all created equal. Standardization is of the utmost importance so that patients will receive consistent and safe doses of their medication. Citiva Medical will be the industry leader based upon their stringent standardization policies and procedures. Citiva Medical has a team with **over 100 combined years of experience in clinical healthcare and the medicinal cannabis industry** and will bring safe and effective products to patients in New York.

I strongly support the New York State Department of Health granting RO status to Citiva Medical. As a responsible leader in this industry, Citiva Medical will bring safe quality medicine to patients suffering from chronic and debilitating disease and provide them with a chance at a better quality of life.

NAME	ADDRESS	PHONE/EMAIL	SIGNATURE
Tom Neary	[redacted]	[redacted]	[redacted]
Rufino Estevez			
Sandra Pascarella			
Michael Mishkoff			
[illegible]			
Ibara			
Jennifer Friedman			
[illegible]			
Francis Gonzalez			
[illegible]			
Abdulla Rahman			
Wendell Pollock			
[illegible]			

Please print, sign and mail petition back by TUESDAY, MAY 26, 2015 to:
Citiva Medical LLC
7378 Amboy Road
Staten Island, NY 10307

PETITION IN SUPPORT OF CITIVA MEDICAL

New York State has enacted a limited medical marijuana program to help treat people with certain conditions, including Cancer, HIV/AIDS, ALS, Parkinson's Disease, MS, Spinal Cord Damage, Epilepsy, Dravet Syndrome, Inflammatory Bowel Syndrome, Huntington's Disease and Neuropathy.

This program, administered through **the Department of Health, will finally bring relief to many suffering patients in New York.** The DOH will grant 5 licenses to operate as registered organizations (RO) allowed to grow, extract and dispense medical marijuana.

Led by preeminent medical cannabis advocate and entrepreneur Josh Stanley, **Citiva Medical is a New York State company specializing in safe and effective products based on the latest advancements in cannabinoid medicine.** Citiva Medical's mission also includes conducting research and developing partnerships with universities, hospitals and institutions across the state to **establish New York as the global epicenter for cannabinoid research.**

ROs are not all created equal. Standardization is of the utmost importance so that patients will receive consistent and safe doses of their medication. Citiva Medical will be the industry leader based upon their stringent standardization policies and procedures. Citiva Medical has a team with **over 100 combined years of experience in clinical healthcare and the medicinal cannabis industry** and will bring safe and effective products to patients in New York.

I strongly support the New York State Department of Health granting RO status to Citiva Medical. As a responsible leader in this industry, Citiva Medical will bring safe quality medicine to patients suffering from chronic and debilitating disease and provide them with a chance at a better quality of life.

NAME	ADDRESS	PHONE/EMAIL	SIGNATURE
[redacted]	[redacted]	[redacted]	[redacted]

Please print, sign and mail petition back by TUESDAY, MAY 26, 2015 to:
Citiva Medical LLC
7378 Amboy Road
Staten Island, NY 10307

PETITION IN SUPPORT OF CITIVA MEDICAL

New York State has enacted a limited medical marijuana program to help treat people with certain conditions, including Cancer, HIV/AIDS, ALS, Parkinson's Disease, MS, Spinal Cord Damage, Epilepsy, Dravet Syndrome, Inflammatory Bowel Syndrome, Huntington's Disease and Neuropathy.

This program, administered through **the Department of Health, will finally bring relief to many suffering patients in New York.** The DOH will grant 5 licenses to operate as registered organizations (RO) allowed to grow, extract and dispense medical marijuana.

Led by preeminent medical cannabis advocate and entrepreneur Josh Stanley, **Citiva Medical is a New York State company specializing in safe and effective products based on the latest advancements in cannabinoid medicine.** Citiva Medical's mission also includes conducting research and developing partnerships with universities, hospitals and institutions across the state to **establish New York as the global epicenter for cannabinoid research.**

ROs are not all created equal. Standardization is of the utmost importance so that patients will receive consistent and safe doses of their medication. Citiva Medical will be the industry leader based upon their stringent standardization policies and procedures. Citiva Medical has a team with **over 100 combined years of experience in clinical healthcare and the medicinal cannabis industry** and will bring safe and effective products to patients in New York.

I strongly support the New York State Department of Health granting RO status to Citiva Medical. As a responsible leader in this industry, Citiva Medical will bring safe quality medicine to patients suffering from chronic and debilitating disease and provide them with a chance at a better quality of life.

NAME	ADDRESS	PHONE/EMAIL	SIGNATURE
Gak Dya	[redacted]		
Boris Cohen	[redacted]		
Anna	[redacted]		
Lucy Liashenko			
MARTA IVLEV			
Oxana Naidannik	[redacted]		
Igor Naidannik			
Rosanna Millman	[redacted]		
Narina Federenco			
Danielle Gibson	[redacted]		
Kelly Coppinger			
Klodjan Hoxha	[redacted]		
Anna Tkachenko			

Please print, sign and mail petition back by TUESDAY, MAY 26, 2015 to:
Citiva Medical LLC
7378 Amboy Road
Staten Island, NY 10307

PETITION IN SUPPORT OF CITIVA MEDICAL

New York State has enacted a limited medical marijuana program to help treat people with certain conditions, including Cancer, HIV/AIDS, ALS, Parkinson's Disease, MS, Spinal Cord Damage, Epilepsy, Dravet Syndrome, Inflammatory Bowel Syndrome, Huntington's Disease and Neuropathy.

This program, administered through **the Department of Health, will finally bring relief to many suffering patients in New York.** The DOH will grant 5 licenses to operate as registered organizations (RO) allowed to grow, extract and dispense medical marijuana.

Led by preeminent medical cannabis advocate and entrepreneur Josh Stanley, **Citiva Medical is a New York State company specializing in safe and effective products based on the latest advancements in cannabinoid medicine.** Citiva Medical's mission also includes conducting research and developing partnerships with universities, hospitals and institutions across the state to **establish New York as the global epicenter for cannabinoid research.**

ROs are not all created equal. Standardization is of the utmost importance so that patients will receive consistent and safe doses of their medication. Citiva Medical will be the industry leader based upon their stringent standardization policies and procedures. Citiva Medical has a team with **over 100 combined years of experience in clinical healthcare and the medicinal cannabis industry** and will bring safe and effective products to patients in New York.

I strongly support the New York State Department of Health granting RO status to Citiva Medical. As a responsible leader in this industry, Citiva Medical will bring safe quality medicine to patients suffering from chronic and debilitating disease and provide them with a chance at a better quality of life.

NAME	ADDRESS	PHONE/EMAIL	SIGNATURE
Dovganyuk, Ivan	[redacted]	[redacted]	
Dovganyuk Maria			
Orlando Martinez			
Francois, Kele			
Jean, Johnson			
Kwatsom, Cyprian			
Ali, Humayon			
Antony Pilipenko			
Carroll, Cytese			
Parks, Jahmal			
Dilshoda Gaysheva			
Usmanova Anastasia			
Ira Nevadsky			

Please print, sign and mail petition back by TUESDAY, MAY 26, 2015 to:
Citiva Medical LLC
7378 Amboy Road
Staten Island, NY 10307

PETITION IN SUPPORT OF CITIVA MEDICAL

New York State has enacted a limited medical marijuana program to help treat people with certain conditions, including Cancer, HIV/AIDS, ALS, Parkinson's Disease, MS, Spinal Cord Damage, Epilepsy, Dravet Syndrome, Inflammatory Bowel Syndrome, Huntington's Disease and Neuropathy.

This program, administered through **the Department of Health, will finally bring relief to many suffering patients in New York.** The DOH will grant 5 licenses to operate as registered organizations (RO) allowed to grow, extract and dispense medical marijuana.

Led by preeminent medical cannabis advocate and entrepreneur Josh Stanley, **Citiva Medical is a New York State company specializing in safe and effective products based on the latest advancements in cannabinoid medicine.** Citiva Medical's mission also includes conducting research and developing partnerships with universities, hospitals and institutions across the state to **establish New York as the global epicenter for cannabinoid research.**

ROs are not all created equal. Standardization is of the utmost importance so that patients will receive consistent and safe doses of their medication. Citiva Medical will be the industry leader based upon their stringent standardization policies and procedures. Citiva Medical has a team with **over 100 combined years of experience in clinical healthcare and the medicinal cannabis industry** and will bring safe and effective products to patients in New York.

I strongly support the New York State Department of Health granting RO status to Citiva Medical. As a responsible leader in this industry, Citiva Medical will bring safe quality medicine to patients suffering from chronic and debilitating disease and provide them with a chance at a better quality of life.

NAME	ADDRESS	PHONE/EMAIL	SIGNATURE
Isabella Mugerman	[redacted]	[redacted]	[redacted]
Margarita Mugerman			
Ilya Mugerman			
Lipa Urman			
Ina Urman			
Tatyana Urman			
Michelle Schneyder			
Leona Gorovets			
Milana Lipkind			
Daniel Peiskin			
Diana Goziker			

Please print, sign and mail petition back by TUESDAY, MAY 26, 2015 to:
Citiva Medical LLC
7378 Amboy Road
Staten Island, NY 10307

PETITION IN SUPPORT OF CITIVA MEDICAL

New York State has enacted a limited medical marijuana program to help treat people with certain conditions, including Cancer, HIV/AIDS, ALS, Parkinson's Disease, MS, Spinal Cord Damage, Epilepsy, Dravet Syndrome, Inflammatory Bowel Syndrome, Huntington's Disease and Neuropathy.

This program, administered through **the Department of Health, will finally bring relief to many suffering patients in New York.** The DOH will grant 5 licenses to operate as registered organizations (RO) allowed to grow, extract and dispense medical marijuana.

Led by preeminent medical cannabis advocate and entrepreneur Josh Stanley, **Citiva Medical is a New York State company specializing in safe and effective products based on the latest advancements in cannabinoid medicine.** Citiva Medical's mission also includes conducting research and developing partnerships with universities, hospitals and institutions across the state to **establish New York as the global epicenter for cannabinoid research.**

ROs are not all created equal. Standardization is of the utmost importance so that patients will receive consistent and safe doses of their medication. Citiva Medical will be the industry leader based upon their stringent standardization policies and procedures. Citiva Medical has a team with **over 100 combined years of experience in clinical healthcare and the medicinal cannabis industry** and will bring safe and effective products to patients in New York.

I strongly support the New York State Department of Health granting RO status to Citiva Medical. As a responsible leader in this industry, Citiva Medical will bring safe quality medicine to patients suffering from chronic and debilitating disease and provide them with a chance at a better quality of life.

NAME	ADDRESS	PHONE/EMAIL	SIGNATURE
Danny Kogan	[redacted]		
Asya Gutman			
Alan Petrovsky			
Alex Sorkin			
Robert Granovsky			
Michelle Zeltser			
Milana Fritzgo HZ			
Marlena Lerner			
Steven Melamud			
Anna Borisova			
Gloria Yuryev			
Alina Kolegova			
Flora Krylov			

Please print, sign and mail petition back by TUESDAY, MAY 26, 2015 to:
Citiva Medical LLC
7378 Amboy Road
Staten Island, NY 10307

PETITION IN SUPPORT OF CITIVA MEDICAL

New York State has enacted a limited medical marijuana program to help treat people with certain conditions, including Cancer, HIV/AIDS, ALS, Parkinson's Disease, MS, Spinal Cord Damage, Epilepsy, Dravet Syndrome, Inflammatory Bowel Syndrome, Huntington's Disease and Neuropathy.

This program, administered through **the Department of Health, will finally bring relief to many suffering patients in New York.** The DOH will grant 5 licenses to operate as registered organizations (RO) allowed to grow, extract and dispense medical marijuana.

Led by preeminent medical cannabis advocate and entrepreneur Josh Stanley, **Citiva Medical is a New York State company specializing in safe and effective products based on the latest advancements in cannabinoid medicine.** Citiva Medical's mission also includes conducting research and developing partnerships with universities, hospitals and institutions across the state to **establish New York as the global epicenter for cannabinoid research.**

ROs are not all created equal. Standardization is of the utmost importance so that patients will receive consistent and safe doses of their medication. Citiva Medical will be the industry leader based upon their stringent standardization policies and procedures. Citiva Medical has a team with **over 100 combined years of experience in clinical healthcare and the medicinal cannabis industry** and will bring safe and effective products to patients in New York.

I strongly support the New York State Department of Health granting RO status to Citiva Medical. As a responsible leader in this industry, Citiva Medical will bring safe quality medicine to patients suffering from chronic and debilitating disease and provide them with a chance at a better quality of life.

NAME	ADDRESS	PHONE/EMAIL	SIGNATURE
[redacted]			

Please print, sign and mail petition back by TUESDAY, MAY 26, 2015 to:
Citiva Medical LLC
7378 Amboy Road
Staten Island, NY 10307

PETITION IN SUPPORT OF CITIVA MEDICAL

New York State has enacted a limited medical marijuana program to help treat people with certain conditions, including Cancer, HIV/AIDS, ALS, Parkinson's Disease, MS, Spinal Cord Damage, Epilepsy, Dravet Syndrome, Inflammatory Bowel Syndrome, Huntington's Disease and Neuropathy.

This program, administered through **the Department of Health, will finally bring relief to many suffering patients in New York.** The DOH will grant 5 licenses to operate as registered organizations (RO) allowed to grow, extract and dispense medical marijuana.

Led by preeminent medical cannabis advocate and entrepreneur Josh Stanley, **Citiva Medical is a New York State company specializing in safe and effective products based on the latest advancements in cannabinoid medicine.** Citiva Medical's mission also includes conducting research and developing partnerships with universities, hospitals and institutions across the state to **establish New York as the global epicenter for cannabinoid research.**

ROs are not all created equal. Standardization is of the utmost importance so that patients will receive consistent and safe doses of their medication. Citiva Medical will be the industry leader based upon their stringent standardization policies and procedures. Citiva Medical has a team with **over 100 combined years of experience in clinical healthcare and the medicinal cannabis industry** and will bring safe and effective products to patients in New York.

I strongly support the New York State Department of Health granting RO status to Citiva Medical. As a responsible leader in this industry, Citiva Medical will bring safe quality medicine to patients suffering from chronic and debilitating disease and provide them with a chance at a better quality of life.

NAME	ADDRESS	PHONE/EMAIL	SIGNATURE
Beverly Weinstein	[redacted]		
Rebecca Ard			
Cheryl Metz			
Valentina Tarasova			
Galina Kanner			
Nathan Kagnaveh			
Polina Markhasyan			
Yanna Markhasyan			
Bella Gebo			
Anatoly Andreev			
Petr Lorberg			
Boris Goodinsky			
Maria Markhasyan			

Please print, sign and mail petition back by TUESDAY, MAY 26, 2015 to:
Citiva Medical LLC
7378 Amboy Road
Staten Island, NY 10307

PETITION IN SUPPORT OF CITIVA MEDICAL

New York State has enacted a limited medical marijuana program to help treat people with certain conditions, including Cancer, HIV/AIDS, ALS, Parkinson's Disease, MS, Spinal Cord Damage, Epilepsy, Dravet Syndrome, Inflammatory Bowel Syndrome, Huntington's Disease and Neuropathy.

This program, administered through **the Department of Health, will finally bring relief to many suffering patients in New York.** The DOH will grant 5 licenses to operate as registered organizations (RO) allowed to grow, extract and dispense medical marijuana.

Led by preeminent medical cannabis advocate and entrepreneur Josh Stanley, **Citiva Medical is a New York State company specializing in safe and effective products based on the latest advancements in cannabinoid medicine.** Citiva Medical's mission also includes conducting research and developing partnerships with universities, hospitals and institutions across the state to **establish New York as the global epicenter for cannabinoid research.**

ROs are not all created equal. Standardization is of the utmost importance so that patients will receive consistent and safe doses of their medication. Citiva Medical will be the industry leader based upon their stringent standardization policies and procedures. Citiva Medical has a team with **over 100 combined years of experience in clinical healthcare and the medicinal cannabis industry** and will bring safe and effective products to patients in New York.

I strongly support the New York State Department of Health granting RO status to Citiva Medical. As a responsible leader in this industry, Citiva Medical will bring safe quality medicine to patients suffering from chronic and debilitating disease and provide them with a chance at a better quality of life.

NAME	ADDRESS	PHONE/EMAIL	SIGNATURE
Hall Shirley	[redacted]		
Joseph Halper			
Hasnan Hamid			
Jackie Michael			
Corey Jeanne			
Kondratenko Nicole			
Dabinsky Leonid			
Lopez Luz			
Mark Sofia			
Manevich Sara			
Sandra Martinez			
Mats, Simon			
Sofia Monreaga			

Please print, sign and mail petition back by TUESDAY, MAY 26, 2015 to:
Citiva Medical LLC
7378 Amboy Road
Staten Island, NY 10307

PETITION IN SUPPORT OF CITIVA MEDICAL

New York State has enacted a limited medical marijuana program to help treat people with certain conditions, including Cancer, HIV/AIDS, ALS, Parkinson's Disease, MS, Spinal Cord Damage, Epilepsy, Dravet Syndrome, Inflammatory Bowel Syndrome, Huntington's Disease and Neuropathy.

This program, administered through **the Department of Health, will finally bring relief to many suffering patients** in **New York.** The DOH will grant 5 licenses to operate as registered organizations (RO) allowed to grow, extract and dispense medical marijuana.

Led by preeminent medical cannabis advocate and entrepreneur Josh Stanley, **Citiva Medical is a New York State company specializing in safe and effective products based on the latest advancements in cannabinoid medicine.** Citiva Medical's mission also includes conducting research and developing partnerships with universities, hospitals and institutions across the state to **establish New York as the global epicenter for cannabinoid research.**

ROs are not all created equal. Standardization is of the utmost importance so that patients will receive consistent and safe doses of their medication. Citiva Medical will be the industry leader based upon their stringent standardization policies and procedures. Citiva Medical has a team with **over 100 combined years of experience in clinical healthcare and the medicinal cannabis industry** and will bring safe and effective products to patients in New York.

I strongly support the New York State Department of Health granting RO status to Citiva Medical. As a responsible leader in this industry, Citiva Medical will bring safe quality medicine to patients suffering from chronic and debilitating disease and provide them with a chance at a better quality of life.

NAME	ADDRESS	PHONE/EMAIL	SIGNATURE
Yemyashev Melana	[redacted]		
Dollie Haa			
Farah Haider			
Mohammed Wafeez			
Helen Hajek 2939			
Melissa Haggerty			
AQSA HAIDER			
HAIDER LAYS			
HAIDER NIMRH			
HAIDER Sidra			
elena kalamenko			
Hasim Halfan			
Yafai Halwan			

Please print, sign and mail petition back by TUESDAY, MAY 26, 2015 to:
Citiva Medical LLC
7378 Amboy Road
Staten Island, NY 10307

PETITION IN SUPPORT OF CITIVA MEDICAL

New York State has enacted a limited medical marijuana program to help treat people with certain conditions, including Cancer, HIV/AIDS, ALS, Parkinson's Disease, MS, Spinal Cord Damage, Epilepsy, Dravet Syndrome, Inflammatory Bowel Syndrome, Huntington's Disease and Neuropathy.

This program, administered through **the Department of Health, will finally bring relief to many suffering patients in New York.** The DOH will grant 5 licenses to operate as registered organizations (RO) allowed to grow, extract and dispense medical marijuana.

Led by preeminent medical cannabis advocate and entrepreneur Josh Stanley, **Citiva Medical is a New York State company specializing in safe and effective products based on the latest advancements in cannabinoid medicine.** Citiva Medical's mission also includes conducting research and developing partnerships with universities, hospitals and institutions across the state to **establish New York as the global epicenter for cannabinoid research.**

ROs are not all created equal. Standardization is of the utmost importance so that patients will receive consistent and safe doses of their medication. Citiva Medical will be the industry leader based upon their stringent standardization policies and procedures. Citiva Medical has a team with **over 100 combined years of experience in clinical healthcare and the medicinal cannabis industry** and will bring safe and effective products to patients in New York.

I strongly support the New York State Department of Health granting RO status to Citiva Medical. As a responsible leader in this industry, Citiva Medical will bring safe quality medicine to patients suffering from chronic and debilitating disease and provide them with a chance at a better quality of life.

NAME	ADDRESS	PHONE/EMAIL	SIGNATURE
[redacted]			

Please print, sign and mail petition back by TUESDAY, MAY 26, 2015 to:
Citiva Medical LLC
7378 Amboy Road
Staten Island, NY 10307

PETITION IN SUPPORT OF CITIVA MEDICAL

New York State has enacted a limited medical marijuana program to help treat people with certain conditions, including Cancer, HIV/AIDS, ALS, Parkinson's Disease, MS, Spinal Cord Damage, Epilepsy, Dravet Syndrome, Inflammatory Bowel Syndrome, Huntington's Disease and Neuropathy.

This program, administered through **the Department of Health, will finally bring relief to many suffering patients in New York.** The DOH will grant 5 licenses to operate as registered organizations (RO) allowed to grow, extract and dispense medical marijuana.

Led by preeminent medical cannabis advocate and entrepreneur Josh Stanley, **Citiva Medical is a New York State company specializing in safe and effective products based on the latest advancements in cannabinoid medicine.** Citiva Medical's mission also includes conducting research and developing partnerships with universities, hospitals and institutions across the state to **establish New York as the global epicenter for cannabinoid research.**

ROs are not all created equal. Standardization is of the utmost importance so that patients will receive consistent and safe doses of their medication. Citiva Medical will be the industry leader based upon their stringent standardization policies and procedures. Citiva Medical has a team with **over 100 combined years of experience in clinical healthcare and the medicinal cannabis industry** and will bring safe and effective products to patients in New York.

I strongly support the New York State Department of Health granting RO status to Citiva Medical. As a responsible leader in this industry, Citiva Medical will bring safe quality medicine to patients suffering from chronic and debilitating disease and provide them with a chance at a better quality of life.

NAME	ADDRESS	PHONE/EMAIL	SIGNATURE
Maina	Berezina	[redacted]	Maina
Svetlana	Lerman	[redacted]	S Lerman
Gasha	Ozar	[redacted]	Ozar
Alexander	Ozar	[redacted]	Alex Ozar
Arkadiy	Harmazay	[redacted]	[illegible]
[illegible]		[redacted]	[illegible]
Raisa	Salita	[redacted]	R Salita
~~Albert Abramovich~~		[redacted]	
Vladimir	Zimin	[redacted]	[illegible]
Ilya Davis	Tdavis	[redacted]	Ilya Davis
Lubov	Kutsiuk	[redacted]	[illegible]
[illegible]	[illegible]	[redacted]	[illegible]
Ganna	[illegible]	[redacted]	[illegible]

lease print, sign and mail petition back by TUESDAY, MAY 26, 2015 to:

Citiva Medical LLC
7378 Amboy Road
Staten Island, NY 10307

PETITION IN SUPPORT OF CITIVA MEDICAL

New York State has enacted a limited medical marijuana program to help treat people with certain conditions, including Cancer, HIV/AIDS, ALS, Parkinson's Disease, MS, Spinal Cord Damage, Epilepsy, Dravet Syndrome, Inflammatory Bowel Syndrome, Huntington's Disease and Neuropathy.

This program, administered through **the Department of Health, will finally bring relief to many suffering patients in New York.** The DOH will grant 5 licenses to operate as registered organizations (RO) allowed to grow, extract and dispense medical marijuana.

Led by preeminent medical cannabis advocate and entrepreneur Josh Stanley, **Citiva Medical is a New York State company specializing in safe and effective products based on the latest advancements in cannabinoid medicine.** Citiva Medical's mission also includes conducting research and developing partnerships with universities, hospitals and institutions across the state to **establish New York as the global epicenter for cannabinoid research.**

ROs are not all created equal. Standardization is of the utmost importance so that patients will receive consistent and safe doses of their medication. Citiva Medical will be the industry leader based upon their stringent standardization policies and procedures. Citiva Medical has a team with **over 100 combined years of experience in clinical healthcare and the medicinal cannabis industry** and will bring safe and effective products to patients in New York.

I strongly support the New York State Department of Health granting RO status to Citiva Medical. As a responsible leader in this industry, Citiva Medical will bring safe quality medicine to patients suffering from chronic and debilitating disease and provide them with a chance at a better quality of life.

NAME	ADDRESS	PHONE/EMAIL	SIGNATURE
Ida Lyulkina	[redacted]	[redacted]	Lyulkina
Oris Zaturenskiy			Zaturenskiy
[illegible]			
Michelle [illegible]			
James Dorsey			James Dorsey
[illegible]			
[illegible]			
[illegible]			
Robin Liliya			Robin
[illegible]			
[illegible]			
[illegible]			
[illegible]			

Please print, sign and mail petition back by TUESDAY, MAY 26, 2015 to:
Citiva Medical LLC
7378 Amboy Road
Staten Island, NY 10307

PETITION IN SUPPORT OF CITIVA MEDICAL

New York State has enacted a limited medical marijuana program to help treat people with certain conditions, including Cancer, HIV/AIDS, ALS, Parkinson's Disease, MS, Spinal Cord Damage, Epilepsy, Dravet Syndrome, Inflammatory Bowel Syndrome, Huntington's Disease and Neuropathy.

This program, administered through **the Department of Health, will finally bring relief to many suffering patients in New York.** The DOH will grant 5 licenses to operate as registered organizations (RO) allowed to grow, extract and dispense medical marijuana.

Led by preeminent medical cannabis advocate and entrepreneur Josh Stanley, **Citiva Medical is a New York State company specializing in safe and effective products based on the latest advancements in cannabinoid medicine.** Citiva Medical's mission also includes conducting research and developing partnerships with universities, hospitals and institutions across the state to **establish New York as the global epicenter for cannabinoid research.**

ROs are not all created equal. Standardization is of the utmost importance so that patients will receive consistent and safe doses of their medication. Citiva Medical will be the industry leader based upon their stringent standardization policies and procedures. Citiva Medical has a team with **over 100 combined years of experience in clinical healthcare and the medicinal cannabis industry** and will bring safe and effective products to patients in New York.

I strongly support the New York State Department of Health granting RO status to Citiva Medical. As a responsible leader in this industry, Citiva Medical will bring safe quality medicine to patients suffering from chronic and debilitating disease and provide them with a chance at a better quality of life.

NAME	ADDRESS	PHONE/EMAIL	SIGNATURE
LEONID YUSIM	[redacted]	[redacted]	Yusim
Liliya TAITZ	[redacted]	[redacted]	[illegible]
Susanna Medresh	[redacted]	[redacted]	[illegible]
Vita Varner	[redacted]	[redacted]	[illegible]
Mewya TISNOVSKY	[redacted]	[redacted]	[redacted]
Dina Shteyngart	[redacted]	[redacted]	[redacted]
Anna Yemdin	[redacted]	[redacted]	Anna Yemalin
Ida Genis	[redacted]	[redacted]	Ida Genis
[illegible]	[redacted]	[redacted]	[illegible]
STELLA KARPISHIN	[redacted]	[redacted]	[illegible]
Yuliya Tolstinskaya			
Gennady Golumar	[redacted]	[redacted]	[redacted]
Ninel Gorobets	[redacted]	[redacted]	[redacted]

Please print, sign and mail petition back by TUESDAY, MAY 26, 2015 to:
Citiva Medical LLC
7378 Amboy Road
Staten Island, NY 10307

PETITION IN SUPPORT OF CITIVA MEDICAL

New York State has enacted a limited medical marijuana program to help treat people with certain conditions, including Cancer, HIV/AIDS, ALS, Parkinson's Disease, MS, Spinal Cord Damage, Epilepsy, Dravet Syndrome, Inflammatory Bowel Syndrome, Huntington's Disease and Neuropathy.

This program, administered through **the Department of Health, will finally bring relief to many suffering patients in New York.** The DOH will grant 5 licenses to operate as registered organizations (RO) allowed to grow, extract and dispense medical marijuana.

Led by preeminent medical cannabis advocate and entrepreneur Josh Stanley, **Citiva Medical is a New York State company specializing in safe and effective products based on the latest advancements in cannabinoid medicine.** Citiva Medical's mission also includes conducting research and developing partnerships with universities, hospitals and institutions across the state to **establish New York as the global epicenter for cannabinoid research.**

ROs are not all created equal. Standardization is of the utmost importance so that patients will receive consistent and safe doses of their medication. Citiva Medical will be the industry leader based upon their stringent standardization policies and procedures. Citiva Medical has a team with **over 100 combined years of experience in clinical healthcare and the medicinal cannabis industry** and will bring safe and effective products to patients in New York.

I strongly support the New York State Department of Health granting RO status to Citiva Medical. As a responsible leader in this industry, Citiva Medical will bring safe quality medicine to patients suffering from chronic and debilitating disease and provide them with a chance at a better quality of life.

NAME	ADDRESS	PHONE/EMAIL	SIGNATURE
[redacted]			

Please print, sign and mail petition back by TUESDAY, MAY 26, 2015 to:
Citiva Medical LLC
7378 Amboy Road
Staten Island, NY 10307

PETITION IN SUPPORT OF CITIVA MEDICAL

New York State has enacted a limited medical marijuana program to help treat people with certain conditions, including Cancer, HIV/AIDS, ALS, Parkinson's Disease, MS, Spinal Cord Damage, Epilepsy, Dravet Syndrome, Inflammatory Bowel Syndrome, Huntington's Disease and Neuropathy.

This program, administered through **the Department of Health, will finally bring relief to many suffering patients in New York.** The DOH will grant 5 licenses to operate as registered organizations (RO) allowed to grow, extract and dispense medical marijuana.

Led by preeminent medical cannabis advocate and entrepreneur Josh Stanley, **Citiva Medical is a New York State company specializing in safe and effective products based on the latest advancements in cannabinoid medicine.** Citiva Medical's mission also includes conducting research and developing partnerships with universities, hospitals and institutions across the state to **establish New York as the global epicenter for cannabinoid research.**

ROs are not all created equal. Standardization is of the utmost importance so that patients will receive consistent and safe doses of their medication. Citiva Medical will be the industry leader based upon their stringent standardization policies and procedures. Citiva Medical has a team with **over 100 combined years of experience in clinical healthcare and the medicinal cannabis industry** and will bring safe and effective products to patients in New York.

I strongly support the New York State Department of Health granting RO status to Citiva Medical. As a responsible leader in this industry, Citiva Medical will bring safe quality medicine to patients suffering from chronic and debilitating disease and provide them with a chance at a better quality of life.

NAME	ADDRESS	PHONE/EMAIL	SIGNATURE
Kora Kogan	[redacted]	[redacted]	[signature]
Zhenya Illeya	[redacted]	[redacted]	[signature]
Rabinovich Mikhail	[redacted]	[redacted]	[signature]
Olga Rabinovskaya	[redacted]	[redacted]	[redacted]
ANBINDER LEONID	[redacted]	[redacted]	[signature]
Sosterman Rivekka	[redacted]	[redacted]	[signature]
Давид [illegible]	[redacted]	[redacted]	[redacted]
Mikhail Sverdlin	[redacted]	[redacted]	[signature]
Stanislava Igalinkova	[redacted]	[redacted]	[redacted]
FLORIYA VINOKUROV	[redacted]	[redacted]	[redacted]
Svetlana Veranova	[redacted]	[redacted]	[redacted]
Lyampert Fira	[redacted]	[redacted]	[signature]
Alexandra Leman	[redacted]	[redacted]	[signature]

lease print, sign and mail petition back by TUESDAY, MAY 26, 2015 to:
Citiva Medical LLC
7378 Amboy Road
Staten Island, NY 10307

PETITION IN SUPPORT OF CITIVA MEDICAL

New York State has enacted a limited medical marijuana program to help treat people with certain conditions, including Cancer, HIV/AIDS, ALS, Parkinson's Disease, MS, Spinal Cord Damage, Epilepsy, Dravet Syndrome, Inflammatory Bowel Syndrome, Huntington's Disease and Neuropathy.

This program, administered through **the Department of Health, will finally bring relief to many suffering patients in New York.** The DOH will grant 5 licenses to operate as registered organizations (RO) allowed to grow, extract and dispense medical marijuana.

Led by preeminent medical cannabis advocate and entrepreneur Josh Stanley, **Citiva Medical is a New York State company specializing in safe and effective products based on the latest advancements in cannabinoid medicine.** Citiva Medical's mission also includes conducting research and developing partnerships with universities, hospitals and institutions across the state to **establish New York as the global epicenter for cannabinoid research.**

ROs are not all created equal. Standardization is of the utmost importance so that patients will receive consistent and safe doses of their medication. Citiva Medical will be the industry leader based upon their stringent standardization policies and procedures. Citiva Medical has a team with **over 100 combined years of experience in clinical healthcare and the medicinal cannabis industry** and will bring safe and effective products to patients in New York.

I strongly support the New York State Department of Health granting RO status to Citiva Medical. As a responsible leader in this industry, Citiva Medical will bring safe quality medicine to patients suffering from chronic and debilitating disease and provide them with a chance at a better quality of life.

NAME	ADDRESS	PHONE/EMAIL	SIGNATURE
[redacted]			

Please print, sign and mail petition back by TUESDAY, MAY 26, 2015 to:
Citiva Medical LLC
7378 Amboy Road
Staten Island, NY 10307

PETITION IN SUPPORT OF CITIVA MEDICAL

New York State has enacted a limited medical marijuana program to help treat people with certain conditions, including Cancer, HIV/AIDS, ALS, Parkinson's Disease, MS, Spinal Cord Damage, Epilepsy, Dravet Syndrome, Inflammatory Bowel Syndrome, Huntington's Disease and Neuropathy.

This program, administered through **the Department of Health, will finally bring relief to many suffering patients** in **New York.** The DOH will grant 5 licenses to operate as registered organizations (RO) allowed to grow, extract and dispense medical marijuana.

Led by preeminent medical cannabis advocate and entrepreneur Josh Stanley, **Citiva Medical is a New York State company specializing in safe and effective products based on the latest advancements in cannabinoid medicine.** Citiva Medical's mission also includes conducting research and developing partnerships with universities, hospitals and institutions across the state to **establish New York as the global epicenter for cannabinoid research.**

ROs are not all created equal. Standardization is of the utmost importance so that patients will receive consistent and safe doses of their medication. Citiva Medical will be the industry leader based upon their stringent standardization policies and procedures. Citiva Medical has a team with **over 100 combined years of experience in clinical healthcare and the medicinal cannabis industry** and will bring safe and effective products to patients in New York.

I strongly support the New York State Department of Health granting RO status to Citiva Medical. As a responsible leader in this industry, Citiva Medical will bring safe quality medicine to patients suffering from chronic and debilitating disease and provide them with a chance at a better quality of life.

NAME	ADDRESS	PHONE/EMAIL	SIGNATURE
Elena Stevens	[redacted]	[redacted]	[redacted]
Marina Yemdin	[redacted]	[redacted]	[redacted]
Terence Hayes	[redacted]	[redacted]	[redacted]
Dzenemirova Tokuta	[redacted]	[redacted]	[redacted]
Dilara Dina Nadiya	[redacted]	[redacted]	[redacted]
Bimbir Leonid	[redacted]	[redacted]	[redacted]
Paul Cattaneo	[redacted]	[redacted]	[redacted]
Esterita Bershadski	[redacted]	[redacted]	[redacted]
Alla Baranchuk	[redacted]	[redacted]	[redacted]
Irina Bianou	[redacted]	[redacted]	[redacted]
Eleonara Baykus	[redacted]	[redacted]	[redacted]
Leonida Ordu	[redacted]	[redacted]	[redacted]
Valentina Spilberg	[redacted]	[redacted]	[redacted]

lease print, sign and mail petition back by TUESDAY, MAY 26, 2015 to:

Citiva Medical LLC
7378 Amboy Road
Staten Island, NY 10307

PETITION IN SUPPORT OF CITIVA MEDICAL

New York State has enacted a limited medical marijuana program to help treat people with certain conditions, including Cancer, HIV/AIDS, ALS, Parkinson's Disease, MS, Spinal Cord Damage, Epilepsy, Dravet Syndrome, Inflammatory Bowel Syndrome, Huntington's Disease and Neuropathy.

This program, administered through **the Department of Health, will finally bring relief to many suffering patients in New York.** The DOH will grant 5 licenses to operate as registered organizations (RO) allowed to grow, extract and dispense medical marijuana.

Led by preeminent medical cannabis advocate and entrepreneur Josh Stanley, **Citiva Medical is a New York State company specializing in safe and effective products based on the latest advancements in cannabinoid medicine.** Citiva Medical's mission also includes conducting research and developing partnerships with universities, hospitals and institutions across the state to **establish New York as the global epicenter for cannabinoid research.**

ROs are not all created equal. Standardization is of the utmost importance so that patients will receive consistent and safe doses of their medication. Citiva Medical will be the industry leader based upon their stringent standardization policies and procedures. Citiva Medical has a team with **over 100 combined years of experience in clinical healthcare and the medicinal cannabis industry** and will bring safe and effective products to patients in New York.

I strongly support the New York State Department of Health granting RO status to Citiva Medical. As a responsible leader in this industry, Citiva Medical will bring safe quality medicine to patients suffering from chronic and debilitating disease and provide them with a chance at a better quality of life.

NAME	ADDRESS	PHONE/EMAIL	SIGNATURE
Spilberg Uri	[redacted]	[redacted]	[redacted]
Anna Shisker	[redacted]	[redacted]	[redacted]
Boris Zhunzherov	[redacted]	[redacted]	[illegible]
Svetlana Zubraz	[redacted]	[redacted]	[illegible]
Rita Yarysheva	[redacted]	[redacted]	[redacted]
Raiza Mohamed	[redacted]	[redacted]	[illegible]
A. Hvas Venta	[redacted]	[redacted]	[illegible]
Zaza Medzgurishvili	[redacted]	[redacted]	[redacted]
Mitelman Zinaida	[redacted]	[redacted]	[redacted]
Velina Abhadiy	[redacted]	[redacted]	[redacted]
Galina Ulanovskaya	[redacted]	[redacted]	[redacted]
Zoa Valle	[redacted]	[redacted]	[redacted]
Vaselyuk Viktor	[redacted]	[redacted]	[redacted]

lease print, sign and mail petition back by TUESDAY, MAY 26, 2015 to: [redacted]

Citiva Medical LLC
7378 Amboy Road
Staten Island, NY 10307

PETITION IN SUPPORT OF CITIVA MEDICAL

New York State has enacted a limited medical marijuana program to help treat people with certain conditions, including Cancer, HIV/AIDS, ALS, Parkinson's Disease, MS, Spinal Cord Damage, Epilepsy, Dravet Syndrome, Inflammatory Bowel Syndrome, Huntington's Disease and Neuropathy.

This program, administered through **the Department of Health, will finally bring relief to many suffering patients in New York.** The DOH will grant 5 licenses to operate as registered organizations (RO) allowed to grow, extract and dispense medical marijuana.

Led by preeminent medical cannabis advocate and entrepreneur Josh Stanley, **Citiva Medical is a New York State company specializing in safe and effective products based on the latest advancements in cannabinoid medicine.** Citiva Medical's mission also includes conducting research and developing partnerships with universities, hospitals and institutions across the state to **establish New York as the global epicenter for cannabinoid research.**

ROs are not all created equal. Standardization is of the utmost importance so that patients will receive consistent and safe doses of their medication. Citiva Medical will be the industry leader based upon their stringent standardization policies and procedures. Citiva Medical has a team with **over 100 combined years of experience in clinical healthcare and the medicinal cannabis industry** and will bring safe and effective products to patients in New York.

I **strongly support the New York State Department of Health granting RO status to Citiva Medical.** As a responsible leader in this industry, Citiva Medical will bring safe quality medicine to patients suffering from chronic and debilitating disease and provide them with a chance at a better quality of life.

NAME	ADDRESS	PHONE/EMAIL	SIGNATURE
Madge Koch	[redacted]		

Please print, sign and mail petition back by TUESDAY, MAY 26, 2015 to:
Citiva Medical LLC
7378 Amboy Road
Staten Island, NY 10307

PETITION IN SUPPORT OF CITIVA MEDICAL

New York State has enacted a limited medical marijuana program to help treat people with certain conditions, including Cancer, HIV/AIDS, ALS, Parkinson's Disease, MS, Spinal Cord Damage, Epilepsy, Dravet Syndrome, Inflammatory Bowel Syndrome, Huntington's Disease and Neuropathy.

This program, administered through **the Department of Health, will finally bring relief to many suffering patients in New York.** The DOH will grant 5 licenses to operate as registered organizations (RO) allowed to grow, extract and dispense medical marijuana.

Led by preeminent medical cannabis advocate and entrepreneur Josh Stanley, **Citiva Medical is a New York State company specializing in safe and effective products based on the latest advancements in cannabinoid medicine.** Citiva Medical's mission also includes conducting research and developing partnerships with universities, hospitals and institutions across the state to **establish New York as the global epicenter for cannabinoid research.**

ROs are not all created equal. Standardization is of the utmost importance so that patients will receive consistent and safe doses of their medication. Citiva Medical will be the industry leader based upon their stringent standardization policies and procedures. Citiva Medical has a team with **over 100 combined years of experience in clinical healthcare and the medicinal cannabis industry** and will bring safe and effective products to patients in New York.

I strongly support the New York State Department of Health granting RO status to Citiva Medical. As a responsible leader in this industry, Citiva Medical will bring safe quality medicine to patients suffering from chronic and debilitating disease and provide them with a chance at a better quality of life.

NAME	ADDRESS	PHONE/EMAIL	SIGNATURE
Colette Elder	[redacted]	[redacted]	
Nicole Simeone			
Antonella Bave			
Jacqueline Pori			
Christine Zmigodski			
Jennifer Bayer			
Kristin Palmeri			
Rosanne Rose			
Vanessa Marrone			
Catina [illegible]			
V. Belen Vanessa Behr			
Alison Maniscalco			

Please print, sign and mail petition back by TUESDAY, MAY 26, 2015 to:
Citiva Medical LLC
7378 Amboy Road
Staten Island, NY 10307

PETITION IN SUPPORT OF CITIVA MEDICAL

New York State has enacted a limited medical marijuana program to help treat people with certain conditions, including Cancer, HIV/AIDS, ALS, Parkinson's Disease, MS, Spinal Cord Damage, Epilepsy, Dravet Syndrome, Inflammatory Bowel Syndrome, Huntington's Disease and Neuropathy.

This program, administered through **the Department of Health, will finally bring relief to many suffering patients in New York.** The DOH will grant 5 licenses to operate as registered organizations (RO) allowed to grow, extract and dispense medical marijuana.

Led by preeminent medical cannabis advocate and entrepreneur Josh Stanley, **Citiva Medical is a New York State company specializing in safe and effective products based on the latest advancements in cannabinoid medicine.** Citiva Medical's mission also includes conducting research and developing partnerships with universities, hospitals and institutions across the state to **establish New York as the global epicenter for cannabinoid research.**

ROs are not all created equal. Standardization is of the utmost importance so that patients will receive consistent and safe doses of their medication. Citiva Medical will be the industry leader based upon their stringent standardization policies and procedures. Citiva Medical has a team with **over 100 combined years of experience in clinical healthcare and the medicinal cannabis industry** and will bring safe and effective products to patients in New York.

I strongly support the New York State Department of Health granting RO status to Citiva Medical. As a responsible leader in this industry, Citiva Medical will bring safe quality medicine to patients suffering from chronic and debilitating disease and provide them with a chance at a better quality of life.

NAME	ADDRESS	PHONE/EMAIL	SIGNATURE
Evelyn Romano	[redacted]	[redacted]	E. Romano
Dolores Tromba			D. Tromba
Enrique Adorno			
Armond Del Prete			A. Del Prete
[illegible]			
Ernest Riggio			
Michael Bosco			
Ben Mannino			
Fred DeGregoria			
Louis G. Penna			L. Penna
Thomas J Scipio			
Saverio Russo			
Peter Conelli			

Please print, sign and mail petition back by TUESDAY, MAY 26, 2015 to:
Citiva Medical LLC
7378 Amboy Road
Staten Island, NY 10307

PETITION IN SUPPORT OF CITIVA MEDICAL

New York State has enacted a limited medical marijuana program to help treat people with certain conditions, including Cancer, HIV/AIDS, ALS, Parkinson's Disease, MS, Spinal Cord Damage, Epilepsy, Dravet Syndrome, Inflammatory Bowel Syndrome, Huntington's Disease and Neuropathy.

This program, administered through **the Department of Health, will finally bring relief to many suffering patients in New York.** The DOH will grant 5 licenses to operate as registered organizations (RO) allowed to grow, extract and dispense medical marijuana.

Led by preeminent medical cannabis advocate and entrepreneur Josh Stanley, **Citiva Medical is a New York State company specializing in safe and effective products based on the latest advancements in cannabinoid medicine.** Citiva Medical's mission also includes conducting research and developing partnerships with universities, hospitals and institutions across the state to **establish New York as the global epicenter for cannabinoid research.**

ROs are not all created equal. Standardization is of the utmost importance so that patients will receive consistent and safe doses of their medication. Citiva Medical will be the industry leader based upon their stringent standardization policies and procedures. Citiva Medical has a team with **over 100 combined years of experience in clinical healthcare and the medicinal cannabis industry** and will bring safe and effective products to patients in New York.

I strongly support the New York State Department of Health granting RO status to Citiva Medical. As a responsible leader in this industry, Citiva Medical will bring safe quality medicine to patients suffering from chronic and debilitating disease and provide them with a chance at a better quality of life.

NAME	ADDRESS	PHONE/EMAIL	SIGNATURE
Inna Rodars	[redacted]		
Rich Plaka			
Thomas Ippolito			
Gerri O'Connor			
Richard Rubenstein			
Yvette Foxman			
Hugo Camacho			
Howard Weinberg			
Roxanne Weinberg			
Sean Whelan			
Stella Coleman			
Carlos Estrella			
Tinnon Pat			

Please print, sign and mail petition back by TUESDAY, MAY 26, 2015 to:
Citiva Medical LLC
7378 Amboy Road
Staten Island, NY 10307

PETITION IN SUPPORT OF CITIVA MEDICAL

New York State has enacted a limited medical marijuana program to help treat people with certain conditions, including Cancer, HIV/AIDS, ALS, Parkinson's Disease, MS, Spinal Cord Damage, Epilepsy, Dravet Syndrome, Inflammatory Bowel Syndrome, Huntington's Disease and Neuropathy.

This program, administered through **the Department of Health, will finally bring relief to many suffering patients in New York.** The DOH will grant 5 licenses to operate as registered organizations (RO) allowed to grow, extract and dispense medical marijuana.

Led by preeminent medical cannabis advocate and entrepreneur Josh Stanley, **Citiva Medical is a New York State company specializing in safe and effective products based on the latest advancements in cannabinoid medicine.** Citiva Medical's mission also includes conducting research and developing partnerships with universities, hospitals and institutions across the state to **establish New York as the global epicenter for cannabinoid research.**

ROs are not all created equal. Standardization is of the utmost importance so that patients will receive consistent and safe doses of their medication. Citiva Medical will be the industry leader based upon their stringent standardization policies and procedures. Citiva Medical has a team with **over 100 combined years of experience in clinical healthcare and the medicinal cannabis industry** and will bring safe and effective products to patients in New York.

I strongly support the New York State Department of Health granting RO status to Citiva Medical. As a responsible leader in this industry, Citiva Medical will bring safe quality medicine to patients suffering from chronic and debilitating disease and provide them with a chance at a better quality of life.

NAME	ADDRESS	PHONE/EMAIL	SIGNATURE
Michelle Smith-Nolen	[redacted]	[redacted]	Michelle
Pamela Wonell	[redacted]	[redacted]	Pamela Wonell
Omwathi Singh	[redacted]	[redacted]	
Odette Wharton	[redacted]	[redacted]	
Frances Vattel	[redacted]	[redacted]	
Mariya Nikitina	[redacted]	[redacted]	
Michael Liderman	[redacted]	[redacted]	
DANA MORALES	[redacted]	[redacted]	
Maria Lattuga	[redacted]	[redacted]	
Gina Saia	[redacted]	[redacted]	

Please print, sign and mail petition back by TUESDAY, MAY 26, 2015 to:
Citiva Medical LLC
7378 Amboy Road
Staten Island, NY 10307

PETITION IN SUPPORT OF CITIVA MEDICAL

New York State has enacted a limited medical marijuana program to help treat people with certain conditions, including Cancer, HIV/AIDS, ALS, Parkinson's Disease, MS, Spinal Cord Damage, Epilepsy, Dravet Syndrome, Inflammatory Bowel Syndrome, Huntington's Disease and Neuropathy.

This program, administered through **the Department of Health, will finally bring relief to many suffering patients in New York.** The DOH will grant 5 licenses to operate as registered organizations (RO) allowed to grow, extract and dispense medical marijuana.

Led by preeminent medical cannabis advocate and entrepreneur Josh Stanley, **Citiva Medical is a New York State company specializing in safe and effective products based on the latest advancements in cannabinoid medicine.** Citiva Medical's mission also includes conducting research and developing partnerships with universities, hospitals and institutions across the state to **establish New York as the global epicenter for cannabinoid research.**

ROs are not all created equal. Standardization is of the utmost importance so that patients will receive consistent and safe doses of their medication. Citiva Medical will be the industry leader based upon their stringent standardization policies and procedures. Citiva Medical has a team with **over 100 combined years of experience in clinical healthcare and the medicinal cannabis industry** and will bring safe and effective products to patients in New York.

I strongly support the New York State Department of Health granting RO status to Citiva Medical. As a responsible leader in this industry, Citiva Medical will bring safe quality medicine to patients suffering from chronic and debilitating disease and provide them with a chance at a better quality of life.

NAME	ADDRESS	PHONE/EMAIL	SIGNATURE
Natalie Mazza,	[redacted]		
CAJETAN MAZZA	[redacted]		C. Mazza

Please print, sign and mail petition back by TUESDAY, MAY 26, 2015 to:
Citiva Medical LLC
7378 Amboy Road
Staten Island, NY 10307

PETITION IN SUPPORT OF CITIVA MEDICAL

New York State has enacted a limited medical marijuana program to help treat people with certain conditions, including Cancer, HIV/AIDS, ALS, Parkinson's Disease, MS, Spinal Cord Damage, Epilepsy, Dravet Syndrome, Inflammatory Bowel Syndrome, Huntington's Disease and Neuropathy.

This program, administered through **the Department of Health, will finally bring relief to many suffering patients in New York.** The DOH will grant 5 licenses to operate as registered organizations (RO) allowed to grow, extract and dispense medical marijuana.

Led by preeminent medical cannabis advocate and entrepreneur Josh Stanley, **Citiva Medical is a New York State company specializing in safe and effective products based on the latest advancements in cannabinoid medicine.** Citiva Medical's mission also includes conducting research and developing partnerships with universities, hospitals and institutions across the state to **establish New York as the global epicenter for cannabinoid research.**

ROs are not all created equal. Standardization is of the utmost importance so that patients will receive consistent and safe doses of their medication. Citiva Medical will be the industry leader based upon their stringent standardization policies and procedures. Citiva Medical has a team with **over 100 combined years of experience in clinical healthcare and the medicinal cannabis industry** and will bring safe and effective products to patients in New York.

I strongly support the New York State Department of Health granting RO status to Citiva Medical. As a responsible leader in this industry, Citiva Medical will bring safe quality medicine to patients suffering from chronic and debilitating disease and provide them with a chance at a better quality of life.

NAME	ADDRESS	PHONE/EMAIL	SIGNATURE
~~Jaylor Cariati~~			
Kelly Sonner	[redacted]		K Sonner
Joanne Perrone	[redacted]		J. Perrone

Please print, sign and mail petition back by TUESDAY, MAY 26, 2015 to:
Citiva Medical LLC
7378 Amboy Road
Staten Island, NY 10307

PETITION IN SUPPORT OF CITIVA MEDICAL

New York State has enacted a limited medical marijuana program to help treat people with certain conditions, including Cancer, HIV/AIDS, ALS, Parkinson's Disease, MS, Spinal Cord Damage, Epilepsy, Dravet Syndrome, Inflammatory Bowel Syndrome, Huntington's Disease and Neuropathy.

This program, administered through **the Department of Health, will finally bring relief to many suffering patients in New York.** The DOH will grant 5 licenses to operate as registered organizations (RO) allowed to grow, extract and dispense medical marijuana.

Led by preeminent medical cannabis advocate and entrepreneur Josh Stanley, **Citiva Medical is a New York State company specializing in safe and effective products based on the latest advancements in cannabinoid medicine.** Citiva Medical's mission also includes conducting research and developing partnerships with universities, hospitals and institutions across the state to **establish New York as the global epicenter for cannabinoid research.**

ROs are not all created equal. Standardization is of the utmost importance so that patients will receive consistent and safe doses of their medication. Citiva Medical will be the industry leader based upon their stringent standardization policies and procedures. Citiva Medical has a team with **over 100 combined years of experience in clinical healthcare and the medicinal cannabis industry** and will bring safe and effective products to patients in New York.

I strongly support the New York State Department of Health granting RO status to Citiva Medical. As a responsible leader in this industry, Citiva Medical will bring safe quality medicine to patients suffering from chronic and debilitating disease and provide them with a chance at a better quality of life.

NAME	ADDRESS	PHONE/EMAIL	SIGNATURE
Michelina Ryszka	[redacted]		Michelina Ryszka
Walter Ryszka			Walter Ryszka
Walter Gworek			Walter Gworek
Loretta Gworek	"	"	Loretta Gworek
John Debo			John Debo
Carol Wawrzyniak			Carol Wawrzyniak
Jerome Wawrzyniak			Jerome Wawrzyniak
Anita Conway			Anita Conway
Thaddeus Conway			Thaddeus Conway
Mary Ann Geles			Mary Ann Geles
Gerald L Geles			Gerald L Geles
Theresa L. Wolfe			Theresa L Wolfe
Elizabeth Ojeda			Elizabeth J Ojeda

Please print, sign and mail petition back by TUESDAY, MAY 26, 2015 to:
Citiva Medical LLC
7378 Amboy Road
Staten Island, NY 10307

PETITION IN SUPPORT OF CITIVA MEDICAL

New York State has enacted a limited medical marijuana program to help treat people with certain conditions, including Cancer, HIV/AIDS, ALS, Parkinson's Disease, MS, Spinal Cord Damage, Epilepsy, Dravet Syndrome, Inflammatory Bowel Syndrome, Huntington's Disease and Neuropathy.

This program, administered through **the Department of Health, will finally bring relief to many suffering patients in New York.** The DOH will grant 5 licenses to operate as registered organizations (RO) allowed to grow, extract and dispense medical marijuana.

Led by preeminent medical cannabis advocate and entrepreneur Josh Stanley, **Citiva Medical is a New York State company specializing in safe and effective products based on the latest advancements in cannabinoid medicine.** Citiva Medical's mission also includes conducting research and developing partnerships with universities, hospitals and institutions across the state to **establish New York as the global epicenter for cannabinoid research.**

ROs are not all created equal. Standardization is of the utmost importance so that patients will receive consistent and safe doses of their medication. Citiva Medical will be the industry leader based upon their stringent standardization policies and procedures. Citiva Medical has a team with **over 100 combined years of experience in clinical healthcare and the medicinal cannabis industry** and will bring safe and effective products to patients in New York.

I strongly support the New York State Department of Health granting RO status to Citiva Medical. As a responsible leader in this industry, Citiva Medical will bring safe quality medicine to patients suffering from chronic and debilitating disease and provide them with a chance at a better quality of life.

NAME	ADDRESS	PHONE/EMAIL	SIGNATURE
Andrew M.	[redacted]	[redacted]	
Susan Bavaro			
Anne M. Jandzinski			
Dave Phillips			
Sigmund J. Hazewski			
Maria Kreinzweski			
Jude Allen			
Kathleen Cahills			
Sandra L. Lang			
Michelle Andrews			
[illegible]			
[illegible]			
CAROL A RICHTER			

Please print, sign and mail petition back by TUESDAY, MAY 26, 2015 to:
Citiva Medical LLC
7378 Amboy Road
Staten Island, NY 10307

PETITION IN SUPPORT OF CITIVA MEDICAL

New York State has enacted a limited medical marijuana program to help treat people with certain conditions, including ancer, HIV/AIDS, ALS, Parkinson's Disease, MS, Spinal Cord Damage, Epilepsy, Dravet Syndrome, Inflammatory Bowel syndrome, Huntington's Disease and Neuropathy.

This program, administered through **the Department of Health, will finally bring relief to many suffering patients in New York.** The DOH will grant 5 licenses to operate as registered organizations (RO) allowed to grow, extract and dispense medical marijuana.

Led by preeminent medical cannabis advocate and entrepreneur Josh Stanley, **Citiva Medical is a New York State company specializing in safe and effective products based on the latest advancements in cannabinoid medicine.** Citiva Medical's mission also includes conducting research and developing partnerships with universities, hospitals and institutions across the state to **establish New York as the global epicenter for cannabinoid research.**

ROs are not all created equal. Standardization is of the utmost importance so that patients will receive consistent and safe doses of their medication. Citiva Medical will be the industry leader based upon their stringent standardization policies and procedures. Citiva Medical has a team with **over 100 combined years of experience in clinical healthcare and the medicinal cannabis industry** and will bring safe and effective products to patients in New York.

I strongly support the New York State Department of Health granting RO status to Citiva Medical. As a responsible leader in this industry, Citiva Medical will bring safe quality medicine to patients suffering from chronic and debilitating disease and provide them with a chance at a better quality of life.

NAME	ADDRESS	PHONE/EMAIL	SIGNATURE
Todd Hackett	[redacted]		
JAMES M. KJUNSH			
Vanessa Dzielski			
JUDITH N. GHISE			
Elizabeth Young			
Jason Bojarski			
Gary Kiblin			
Tom Puchalski			
William Stivers			
Helen Sluberski			
JOSEPH S. SLUBERSKI			
Sophie Osika			
CHRISTINE YASKAVICH			

Please print, sign and mail petition back by TUESDAY, MAY 26, 2015 to:
Citiva Medical LLC
7378 Amboy Road
Staten Island, NY 10307

PETITION IN SUPPORT OF CITIVA MEDICAL

New York State has enacted a limited medical marijuana program to help treat people with certain conditions, including Cancer, HIV/AIDS, ALS, Parkinson's Disease, MS, Spinal Cord Damage, Epilepsy, Dravet Syndrome, Inflammatory Bowel Syndrome, Huntington's Disease and Neuropathy.

This program, administered through **the Department of Health, will finally bring relief to many suffering patients in New York.** The DOH will grant 5 licenses to operate as registered organizations (RO) allowed to grow, extract and dispense medical marijuana.

Led by preeminent medical cannabis advocate and entrepreneur Josh Stanley, **Citiva Medical is a New York State company specializing in safe and effective products based on the latest advancements in cannabinoid medicine.** Citiva Medical's mission also includes conducting research and developing partnerships with universities, hospitals and institutions across the state to **establish New York as the global epicenter for cannabinoid research.**

ROs are not all created equal. Standardization is of the utmost importance so that patients will receive consistent and safe doses of their medication. Citiva Medical will be the industry leader based upon their stringent standardization policies and procedures. Citiva Medical has a team with **over 100 combined years of experience in clinical healthcare and the medicinal cannabis industry** and will bring safe and effective products to patients in New York.

I strongly support the New York State Department of Health granting RO status to Citiva Medical. As a responsible leader in this industry, Citiva Medical will bring safe quality medicine to patients suffering from chronic and debilitating disease and provide them with a chance at a better quality of life.

NAME	ADDRESS	PHONE/EMAIL	SIGNATURE
JANICE KORZENIEWSKI	[redacted]		
Bill Fricke			
Sharon STROKA			
JEROME SZEFER			
Gloria Kaganel			
Larmour Dorothy			
John Schutt			
EDWARD SZALANSKI SR.			
Joseph Dries			
Rodd L. Froebel			
Charles MANDEL			
JOHN CARVEY			
Timothy E. Hirschler			

Please print, sign and mail petition back by TUESDAY, MAY 26, 2015 to:
Citiva Medical LLC
7378 Amboy Road
Staten Island, NY 10307

PETITION IN SUPPORT OF CITIVA MEDICAL

New York State has enacted a limited medical marijuana program to help treat people with certain conditions, including Cancer, HIV/AIDS, ALS, Parkinson's Disease, MS, Spinal Cord Damage, Epilepsy, Dravet Syndrome, Inflammatory Bowel Syndrome, Huntington's Disease and Neuropathy.

This program, administered through **the Department of Health, will finally bring relief to many suffering patients in New York.** The DOH will grant 5 licenses to operate as registered organizations (RO) allowed to grow, extract and dispense medical marijuana.

Led by preeminent medical cannabis advocate and entrepreneur Josh Stanley, **Citiva Medical is a New York State company specializing in safe and effective products based on the latest advancements in cannabinoid medicine.** Citiva Medical's mission also includes conducting research and developing partnerships with universities, hospitals and institutions across the state to **establish New York as the global epicenter for cannabinoid research.**

ROs are not all created equal. Standardization is of the utmost importance so that patients will receive consistent and safe doses of their medication. Citiva Medical will be the industry leader based upon their stringent standardization policies and procedures. Citiva Medical has a team with **over 100 combined years of experience in clinical healthcare and the medicinal cannabis industry** and will bring safe and effective products to patients in New York.

I strongly support the New York State Department of Health granting RO status to Citiva Medical. As a responsible leader in this industry, Citiva Medical will bring safe quality medicine to patients suffering from chronic and debilitating disease and provide them with a chance at a better quality of life.

NAME	ADDRESS	PHONE/EMAIL	SIGNATURE
Molly Wilkowski	[redacted]	[redacted]	Wilkowski
Laura Wozniak			L.V. Wozniak
Barbara			
Maria Maski			Maria Maski
Patricia Dobucki			Patricia Dobucki
Marsha Haas			Marsha Haas
James Bruch			
Joann Reformat			Joann Reformat
Rita Fiel			Rita Fielkiewicz
Theresa J. Brodzinski			Theresa J. Brodzinski
Anthony Listo			
James F. Wendel			
Joel			Joel Kohnke

Please print, sign and mail petition back by TUESDAY, MAY 26, 2015 to:
Citiva Medical LLC
7378 Amboy Road
Staten Island, NY 10307

PETITION IN SUPPORT OF CITIVA MEDICAL

New York State has enacted a limited medical marijuana program to help treat people with certain conditions, including ancer, HIV/AIDS, ALS, Parkinson's Disease, MS, Spinal Cord Damage, Epilepsy, Dravet Syndrome, Inflammatory Bowel Syndrome, Huntington's Disease and Neuropathy.

This program, administered through **the Department of Health, will finally bring relief to many suffering patients in New York.** The DOH will grant 5 licenses to operate as registered organizations (RO) allowed to grow, extract and dispense medical marijuana.

Led by preeminent medical cannabis advocate and entrepreneur Josh Stanley, **Citiva Medical is a New York State company specializing in safe and effective products based on the latest advancements in cannabinoid medicine.** Citiva Medical's mission also includes conducting research and developing partnerships with universities, hospitals and institutions across the state to **establish New York as the global epicenter for cannabinoid research.**

ROs are not all created equal. Standardization is of the utmost importance so that patients will receive consistent and safe doses of their medication. Citiva Medical will be the industry leader based upon their stringent standardization policies and procedures. Citiva Medical has a team with **over 100 combined years of experience in clinical healthcare and the medicinal cannabis industry** and will bring safe and effective products to patients in New York.

I strongly support the New York State Department of Health granting RO status to Citiva Medical. As a responsible leader in this industry, Citiva Medical will bring safe quality medicine to patients suffering from chronic and debilitating disease and provide them with a chance at a better quality of life.

NAME	ADDRESS	PHONE/EMAIL	SIGNATURE
Cisq McLeod	[redacted]	[redacted]	
Michael Zvanut MD			
Denee Smith			
Deb Kunzly RN			
Margaret Larsen RN			
Paula Stark			
Dawn Hayek			
Lynn Fedeson			
Nicole Miller PA-C			
Kevin Mills			
Linda Hessel			
RENEE PHILLIPS			
Susan Murphy			

Please print, sign and mail petition back by TUESDAY, MAY 26, 2015 to:
Citiva Medical LLC
7378 Amboy Road
Staten Island, NY 10307

PETITION IN SUPPORT OF CITIVA MEDICAL

New York State has enacted a limited medical marijuana program to help treat people with certain conditions, including Cancer, HIV/AIDS, ALS, Parkinson's Disease, MS, Spinal Cord Damage, Epilepsy, Dravet Syndrome, Inflammatory Bowel ıdrome, Huntington's Disease and Neuropathy.

This program, administered through **the Department of Health, will finally bring relief to many suffering patients in New York.** The DOH will grant 5 licenses to operate as registered organizations (RO) allowed to grow, extract and dispense medical marijuana.

Led by preeminent medical cannabis advocate and entrepreneur Josh Stanley, **Citiva Medical is a New York State company specializing in safe and effective products based on the latest advancements in cannabinoid medicine.** Citiva Medical's mission also includes conducting research and developing partnerships with universities, hospitals and institutions across the state to **establish New York as the global epicenter for cannabinoid research.**

ROs are not all created equal. Standardization is of the utmost importance so that patients will receive consistent and safe doses of their medication. Citiva Medical will be the industry leader based upon their stringent standardization policies and procedures. Citiva Medical has a team with **over 100 combined years of experience in clinical healthcare and the medicinal cannabis industry** and will bring safe and effective products to patients in New York.

I strongly support the New York State Department of Health granting RO status to Citiva Medical. As a responsible leader in this industry, Citiva Medical will bring safe quality medicine to patients suffering from chronic and debilitating disease and provide them with a chance at a better quality of life.

NAME	ADDRESS	PHONE/EMAIL	SIGNATURE
Marilyn Cone	[redacted]		Marilyn Cone
Marsha Hargro			Marsha Hargro
Marcia Bank			Marcia Bank
Cheryl Borne			Cheryl Borne
Lesley Hammer			Lesley Hammer
Christina Pietrafesa			Christina Pietrafesa
Alicia Durante			Alicia Durante
Juliana Marciniak			Juliana Marciniak
ANTHONY P. VENTOLA			Anthony P. Ventola
Joyce B. Ciesielski			Joyce B. Ciesielski
Robert J Ciesielski			Robert J Ciesielski
WILLIAM R. KELLER			William R. Keller
Eileen Hodson			Eileen Hodson

Please print, sign and mail petition back by TUESDAY, MAY 26, 2015 to:
Citiva Medical LLC
7378 Amboy Road
Staten Island, NY 10307

PETITION IN SUPPORT OF CITIVA MEDICAL

New York State has enacted a limited medical marijuana program to help treat people with certain conditions, including Cancer, HIV/AIDS, ALS, Parkinson's Disease, MS, Spinal Cord Damage, Epilepsy, Dravet Syndrome, Inflammatory Bowel ndrome, Huntington's Disease and Neuropathy.

This program, administered through **the Department of Health, will finally bring relief to many suffering patients in New York.** The DOH will grant 5 licenses to operate as registered organizations (RO) allowed to grow, extract and dispense medical marijuana.

Led by preeminent medical cannabis advocate and entrepreneur Josh Stanley, **Citiva Medical is a New York State company specializing in safe and effective products based on the latest advancements in cannabinoid medicine.** Citiva Medical's mission also includes conducting research and developing partnerships with universities, hospitals and institutions across the state to **establish New York as the global epicenter for cannabinoid research.**

ROs are not all created equal. Standardization is of the utmost importance so that patients will receive consistent and safe doses of their medication. Citiva Medical will be the industry leader based upon their stringent standardization policies and procedures. Citiva Medical has a team with **over 100 combined years of experience in clinical healthcare and the medicinal cannabis industry** and will bring safe and effective products to patients in New York.

I strongly support the New York State Department of Health granting RO status to Citiva Medical. As a responsible leader in this industry, Citiva Medical will bring safe quality medicine to patients suffering from chronic and debilitating disease and provide them with a chance at a better quality of life.

NAME	ADDRESS	PHONE/EMAIL	SIGNATURE
[redacted]			

Please print, sign and mail petition back by TUESDAY, MAY 26, 2015 to:

Citiva Medical LLC
7378 Amboy Road
Staten Island, NY 10307

PETITION IN SUPPORT OF CITIVA MEDICAL

New York State has enacted a limited medical marijuana program to help treat people with certain conditions, including Cancer, HIV/AIDS, ALS, Parkinson's Disease, MS, Spinal Cord Damage, Epilepsy, Dravet Syndrome, Inflammatory Bowel ıdrome, Huntington's Disease and Neuropathy.

This program, administered through **the Department of Health, will finally bring relief to many suffering patients in New York.** The DOH will grant 5 licenses to operate as registered organizations (RO) allowed to grow, extract and dispense medical marijuana.

Led by preeminent medical cannabis advocate and entrepreneur Josh Stanley, **Citiva Medical is a New York State company specializing in safe and effective products based on the latest advancements in cannabinoid medicine.** Citiva Medical's mission also includes conducting research and developing partnerships with universities, hospitals and institutions across the state to **establish New York as the global epicenter for cannabinoid research.**

ROs are not all created equal. Standardization is of the utmost importance so that patients will receive consistent and safe doses of their medication. Citiva Medical will be the industry leader based upon their stringent standardization policies and procedures. Citiva Medical has a team with **over 100 combined years of experience in clinical healthcare and the medicinal cannabis industry** and will bring safe and effective products to patients in New York.

I strongly support the New York State Department of Health granting RO status to Citiva Medical. As a responsible leader in this industry, Citiva Medical will bring safe quality medicine to patients suffering from chronic and debilitating disease and provide them with a chance at a better quality of life.

NAME	ADDRESS	PHONE/EMAIL	SIGNATURE
Cynthia Juhre	[redacted]		Cynthia M. Juhre RN
[illegible]			
Adam Alessi			
Sandra M. Felger			
James P. Pile			
Dan Trim			
Robert Engasser			Robert Engasser
Sammi Engasser			Sammi Engasser
[illegible]			
Ronald Juhre			
Lisa Trillizio			
Joan Anastasi			
Annie Allen			

Please print, sign and mail petition back by TUESDAY, MAY 26, 2015 to:
Citiva Medical LLC
7378 Amboy Road
Staten Island, NY 10307

PETITION IN SUPPORT OF CITIVA MEDICAL

New York State has enacted a limited medical marijuana program to help treat people with certain conditions, including Cancer, HIV/AIDS, ALS, Parkinson's Disease, MS, Spinal Cord Damage, Epilepsy, Dravet Syndrome, Inflammatory Bowel Syndrome, Huntington's Disease and Neuropathy.

This program, administered through the **Department of Health, will finally bring relief to many suffering patients in New York.** The DOH will grant 5 licenses to operate as registered organizations (RO) allowed to grow, extract and dispense medical marijuana.

Led by preeminent medical cannabis advocate and entrepreneur Josh Stanley, **Citiva Medical is a New York State company specializing in safe and effective products based on the latest advancements in cannabinoid medicine.** Citiva Medical's mission also includes conducting research and developing partnerships with universities, hospitals and institutions across the state to **establish New York as the global epicenter for cannabinoid research.**

ROs are not all created equal. Standardization is of the utmost importance so that patients will receive consistent and safe doses of their medication. Citiva Medical will be the industry leader based upon their stringent standardization policies and procedures. Citiva Medical has a team with **over 100 combined years of experience in clinical healthcare and the medicinal cannabis industry** and will bring safe and effective products to patients in New York.

I strongly support the New York State Department of Health granting RO status to Citiva Medical. As a responsible leader in this industry, Citiva Medical will bring safe quality medicine to patients suffering from chronic and debilitating disease and provide them with a chance at a better quality of life.

NAME	ADDRESS	PHONE/EMAIL	SIGNATURE
Michele Sidoti	[redacted]		
Lois Tobolski			
Alice M Gonce			
Tracy Burns			
Fenisha L Harris			
Kathleen deGuehery			
Mary Rowe			
Gail Finch			
Dianna Barton			
Natalie Lehan			
Phyllis Wagner			
Kelly Simmons			
Susan Luzi Montazzoli			

Please print, sign and mail petition back by TUESDAY, MAY 26, 2015 to:
Citiva Medical LLC
7378 Amboy Road
Staten Island, NY 10307

PETITION IN SUPPORT OF CITIVA MEDICAL

New York State has enacted a limited medical marijuana program to help treat people with certain conditions, including Cancer, HIV/AIDS, ALS, Parkinson's Disease, MS, Spinal Cord Damage, Epilepsy, Dravet Syndrome, Inflammatory Bowel Syndrome, Huntington's Disease and Neuropathy.

This program, administered through **the Department of Health, will finally bring relief to many suffering patients in New York.** The DOH will grant 5 licenses to operate as registered organizations (RO) allowed to grow, extract and dispense medical marijuana.

Led by preeminent medical cannabis advocate and entrepreneur Josh Stanley, **Citiva Medical is a New York State company specializing in safe and effective products based on the latest advancements in cannabinoid medicine.** Citiva Medical's mission also includes conducting research and developing partnerships with universities, hospitals and institutions across the state to **establish New York as the global epicenter for cannabinoid research.**

ROs are not all created equal. Standardization is of the utmost importance so that patients will receive consistent and safe doses of their medication. Citiva Medical will be the industry leader based upon their stringent standardization policies and procedures. Citiva Medical has a team with **over 100 combined years of experience in clinical healthcare and the medicinal cannabis industry** and will bring safe and effective products to patients in New York.

I strongly support the New York State Department of Health granting RO status to Citiva Medical. As a responsible leader in this industry, Citiva Medical will bring safe quality medicine to patients suffering from chronic and debilitating disease and provide them with a chance at a better quality of life.

NAME	ADDRESS	PHONE/EMAIL	SIGNATURE
Samantha Broad	[redacted]		
Jocelyn Albright			
Jodi Rauch			
Erin McDonnaughey			
Lisa Blair			
Jo Ann Cylka			
Cheryl L. Sample			
Heather Syracuse			
Jeanne Crowley			
Abby Weiss			
Elena Hingston			
LAURIE D'Amico			
Natalie Shattuck			

Please print, sign and mail petition back by TUESDAY, MAY 26, 2015 to:
Citiva Medical LLC
7378 Amboy Road
Staten Island, NY 10307

PETITION IN SUPPORT OF CITIVA MEDICAL

New York State has enacted a limited medical marijuana program to help treat people with certain conditions, including Cancer, HIV/AIDS, ALS, Parkinson's Disease, MS, Spinal Cord Damage, Epilepsy, Dravet Syndrome, Inflammatory Bowel Syndrome, Huntington's Disease and Neuropathy.

This program, administered through **the Department of Health, will finally bring relief to many suffering patients in New York.** The DOH will grant 5 licenses to operate as registered organizations (RO) allowed to grow, extract and dispense medical marijuana.

Led by preeminent medical cannabis advocate and entrepreneur Josh Stanley, **Citiva Medical is a New York State company specializing in safe and effective products based on the latest advancements in cannabinoid medicine.** Citiva Medical's mission also includes conducting research and developing partnerships with universities, hospitals and institutions across the state to **establish New York as the global epicenter for cannabinoid research.**

ROs are not all created equal. Standardization is of the utmost importance so that patients will receive consistent and safe doses of their medication. Citiva Medical will be the industry leader based upon their stringent standardization policies and procedures. Citiva Medical has a team with **over 100 combined years of experience in clinical healthcare and the medicinal cannabis industry** and will bring safe and effective products to patients in New York.

I strongly support the New York State Department of Health granting RO status to Citiva Medical. As a responsible leader in this industry, Citiva Medical will bring safe quality medicine to patients suffering from chronic and debilitating disease and provide them with a chance at a better quality of life.

NAME	ADDRESS	PHONE/EMAIL	SIGNATURE
Chris Veith	[redacted]		
Nancy Hingston			
Jessica Costella			
Nancy Vogt			
Amanda Klump			
Stefanie Egan			
Jamie Kozanecki			
Anne Steinmetz			
Ann Marie Macchi			
Margaret Constantino			
Maria L. Keller			
Lisa Batt			
Kim Sienkiewicz			

Please print, sign and mail petition back by TUESDAY, MAY 26, 2015 to:
Citiva Medical LLC
7378 Amboy Road
Staten Island, NY 10307

PETITION IN SUPPORT OF CITIVA MEDICAL

New York State has enacted a limited medical marijuana program to help treat people with certain conditions, including Cancer, HIV/AIDS, ALS, Parkinson's Disease, MS, Spinal Cord Damage, Epilepsy, Dravet Syndrome, Inflammatory Bowel ıdrome, Huntington's Disease and Neuropathy.

This program, administered through **the Department of Health, will finally bring relief to many suffering patients in New York.** The DOH will grant 5 licenses to operate as registered organizations (RO) allowed to grow, extract and dispense medical marijuana.

Led by preeminent medical cannabis advocate and entrepreneur Josh Stanley, **Citiva Medical is a New York State company specializing in safe and effective products based on the latest advancements in cannabinoid medicine.** Citiva Medical's mission also includes conducting research and developing partnerships with universities, hospitals and institutions across the state to **establish New York as the global epicenter for cannabinoid research.**

ROs are not all created equal. Standardization is of the utmost importance so that patients will receive consistent and safe doses of their medication. Citiva Medical will be the industry leader based upon their stringent standardization policies and procedures. Citiva Medical has a team with **over 100 combined years of experience in clinical healthcare and the medicinal cannabis industry** and will bring safe and effective products to patients in New York.

I strongly support the New York State Department of Health granting RO status to Citiva Medical. As a responsible leader in this industry, Citiva Medical will bring safe quality medicine to patients suffering from chronic and debilitating disease and provide them with a chance at a better quality of life.

NAME	ADDRESS	PHONE/EMAIL	SIGNATURE
Phil Garis	[redacted]	[redacted]	
Sam Savoy			
Alison Grembowicz			
Sara Pohl			
Christy Grembowicz			
Bob Hundley			
Russell Allen			
Kristen Hundley			
Renee Pennington			
Linda Liszewski			
Jessica Barlow			
Nancy Godson			
Linda Myers			

Please print, sign and mail petition back by TUESDAY, MAY 26, 2015 to:
Citiva Medical LLC
7378 Amboy Road
Staten Island, NY 10307

PETITION IN SUPPORT OF CITIVA MEDICAL

New York State has enacted a limited medical marijuana program to help treat people with certain conditions, including Cancer, HIV/AIDS, ALS, Parkinson's Disease, MS, Spinal Cord Damage, Epilepsy, Dravet Syndrome, Inflammatory Bowel ıdrome, Huntington's Disease and Neuropathy.

This program, administered through **the Department of Health, will finally bring relief to many suffering patients in New York.** The DOH will grant 5 licenses to operate as registered organizations (RO) allowed to grow, extract and dispense medical marijuana.

Led by preeminent medical cannabis advocate and entrepreneur Josh Stanley, **Citiva Medical is a New York State company specializing in safe and effective products based on the latest advancements in cannabinoid medicine.** Citiva Medical's mission also includes conducting research and developing partnerships with universities, hospitals and institutions across the state to **establish New York as the global epicenter for cannabinoid research.**

ROs are not all created equal. Standardization is of the utmost importance so that patients will receive consistent and safe doses of their medication. Citiva Medical will be the industry leader based upon their stringent standardization policies and procedures. Citiva Medical has a team with **over 100 combined years of experience in clinical healthcare and the medicinal cannabis industry** and will bring safe and effective products to patients in New York.

I strongly support the New York State Department of Health granting RO status to Citiva Medical. As a responsible leader in this industry, Citiva Medical will bring safe quality medicine to patients suffering from chronic and debilitating disease and provide them with a chance at a better quality of life.

NAME	ADDRESS	PHONE/EMAIL	SIGNATURE
Daniel Ryszka	[redacted]	[redacted]	[redacted]
Linda Ryszka			
Joshua J. Dumbrosky			
KAREN M. HARMS			
Carol Dumbrosky			
Jason Kisloski			
Marianne Bauerlein			
Lisa Belstadt			
Dawn Kubisty			
Katherine P. Fenton			
Christine Evans			
Tom Kerry			
John Joe Jiles Jr.			

Please print, sign and mail petition back by TUESDAY, MAY 26, 2015 to:
Citiva Medical LLC
7378 Amboy Road
Staten Island, NY 10307

PETITION IN SUPPORT OF CITIVA MEDICAL

New York State has enacted a limited medical marijuana program to help treat people with certain conditions, including Cancer, HIV/AIDS, ALS, Parkinson's Disease, MS, Spinal Cord Damage, Epilepsy, Dravet Syndrome, Inflammatory Bowel ndrome, Huntington's Disease and Neuropathy.

This program, administered through the **Department of Health, will finally bring relief to many suffering patients in New York.** The DOH will grant 5 licenses to operate as registered organizations (RO) allowed to grow, extract and dispense medical marijuana.

Led by preeminent medical cannabis advocate and entrepreneur Josh Stanley, **Citiva Medical is a New York State company specializing in safe and effective products based on the latest advancements in cannabinoid medicine.** Citiva Medical's mission also includes conducting research and developing partnerships with universities, hospitals and institutions across the state to **establish New York as the global epicenter for cannabinoid research.**

ROs are not all created equal. Standardization is of the utmost importance so that patients will receive consistent and safe doses of their medication. Citiva Medical will be the industry leader based upon their stringent standardization policies and procedures. Citiva Medical has a team with **over 100 combined years of experience in clinical healthcare and the medicinal cannabis industry** and will bring safe and effective products to patients in New York.

I strongly support the New York State Department of Health granting RO status to Citiva Medical. As a responsible leader in this industry, Citiva Medical will bring safe quality medicine to patients suffering from chronic and debilitating disease and provide them with a chance at a better quality of life.

NAME	ADDRESS	PHONE/EMAIL	SIGNATURE
Rose Homuth	[redacted]	[redacted]	Rose Homuth
Melissa Nolan			Melissa Nolan
Brent Faulkner			Brent Faulkner
DAVID CHASE			
Kelly Munro			Kelly Munro
Victoria Irons			Victoria Irons
Andrew Cooper			
Eugene Spring			
Robert Kadigan			
Barbara Palmer			
DENNIS TURNER			
Denise Turner			Denise Turner
Jerome TRASS			Jerome Trass

Please print, sign and mail petition back by TUESDAY, MAY 26, 2015 to:
Citiva Medical LLC
7378 Amboy Road
Staten Island, NY 10307

PETITION IN SUPPORT OF CITIVA MEDICAL

New York State has enacted a limited medical marijuana program to help treat people with certain conditions, including Cancer, HIV/AIDS, ALS, Parkinson's Disease, MS, Spinal Cord Damage, Epilepsy, Dravet Syndrome, Inflammatory Bowel ndrome, Huntington's Disease and Neuropathy.

This program, administered through **the Department of Health, will finally bring relief to many suffering patients in New York.** The DOH will grant 5 licenses to operate as registered organizations (RO) allowed to grow, extract and dispense medical marijuana.

Led by preeminent medical cannabis advocate and entrepreneur Josh Stanley, **Citiva Medical is a New York State company specializing in safe and effective products based on the latest advancements in cannabinoid medicine.** Citiva Medical's mission also includes conducting research and developing partnerships with universities, hospitals and institutions across the state to **establish New York as the global epicenter for cannabinoid research.**

ROs are not all created equal. Standardization is of the utmost importance so that patients will receive consistent and safe doses of their medication. Citiva Medical will be the industry leader based upon their stringent standardization policies and procedures. Citiva Medical has a team with **over 100 combined years of experience in clinical healthcare and the medicinal cannabis industry** and will bring safe and effective products to patients in New York.

I strongly support the New York State Department of Health granting RO status to Citiva Medical. As a responsible leader in this industry, Citiva Medical will bring safe quality medicine to patients suffering from chronic and debilitating disease and provide them with a chance at a better quality of life.

NAME	ADDRESS	PHONE/EMAIL	SIGNATURE
X [illegible]	[redacted]		
Pamela Napolitano			
Mary Shirley			
Ana Krisuks			
Anthony Muega			
[illegible]			
Matt Lisi			
[illegible]			
Al Mastersoseph			
[illegible]			
[illegible]			
[illegible]			
Anita Fleitman			

Please print, sign and mail petition back by TUESDAY, MAY 26, 2015 to:
Citiva Medical LLC
7378 Amboy Road
Staten Island, NY 10307

PETITION IN SUPPORT OF CITIVA MEDICAL

New York State has enacted a limited medical marijuana program to help treat people with certain conditions, including Cancer, HIV/AIDS, ALS, Parkinson's Disease, MS, Spinal Cord Damage, Epilepsy, Dravet Syndrome, Inflammatory Bowel drome, Huntington's Disease and Neuropathy.

This program, administered through **the Department of Health, will finally bring relief to many suffering patients in New York.** The DOH will grant 5 licenses to operate as registered organizations (RO) allowed to grow, extract and dispense medical marijuana.

Led by preeminent medical cannabis advocate and entrepreneur Josh Stanley, **Citiva Medical is a New York State company specializing in safe and effective products based on the latest advancements in cannabinoid medicine.** Citiva Medical's mission also includes conducting research and developing partnerships with universities, hospitals and institutions across the state to **establish New York as the global epicenter for cannabinoid research.**

ROs are not all created equal. Standardization is of the utmost importance so that patients will receive consistent and safe doses of their medication. Citiva Medical will be the industry leader based upon their stringent standardization policies and procedures. Citiva Medical has a team with **over 100 combined years of experience in clinical healthcare and the medicinal cannabis industry** and will bring safe and effective products to patients in New York.

I strongly support the New York State Department of Health granting RO status to Citiva Medical. As a responsible leader in this industry, Citiva Medical will bring safe quality medicine to patients suffering from chronic and debilitating disease and provide them with a chance at a better quality of life.

NAME	ADDRESS	PHONE/EMAIL	SIGNATURE
Rosemarie Roberts	[redacted]	[redacted]	Rosemarie Roberts
Lori Rose			Lori Rose
Rusai Hammer			
CATHY BENFANTE			
RoseAnne Civera			
Catherine Canizzaro			
MaryEllen Stuto			
Cathy Verrastro			
Laura James			
Louis James			
Kristy Boerner			
John Feldman			
FRANK BAVARO			

Please print, sign and mail petition back by TUESDAY, MAY 26, 2015 to:
Citiva Medical LLC
7378 Amboy Road
Staten Island, NY 10307

PETITION IN SUPPORT OF CITIVA MEDICAL

New York State has enacted a limited medical marijuana program to help treat people with certain conditions, including Cancer, HIV/AIDS, ALS, Parkinson's Disease, MS, Spinal Cord Damage, Epilepsy, Dravet Syndrome, Inflammatory Bowel Syndrome, Huntington's Disease and Neuropathy.

This program, administered through **the Department of Health, will finally bring relief to many suffering patients in New York.** The DOH will grant 5 licenses to operate as registered organizations (RO) allowed to grow, extract and dispense medical marijuana.

Led by preeminent medical cannabis advocate and entrepreneur Josh Stanley, **Citiva Medical is a New York State company specializing in safe and effective products based on the latest advancements in cannabinoid medicine.** Citiva Medical's mission also includes conducting research and developing partnerships with universities, hospitals and institutions across the state to **establish New York as the global epicenter for cannabinoid research.**

ROs are not all created equal. Standardization is of the utmost importance so that patients will receive consistent and safe doses of their medication. Citiva Medical will be the industry leader based upon their stringent standardization policies and procedures. Citiva Medical has a team with **over 100 combined years of experience in clinical healthcare and the medicinal cannabis industry** and will bring safe and effective products to patients in New York.

I strongly support the New York State Department of Health granting RO status to Citiva Medical. As a responsible leader in this industry, Citiva Medical will bring safe quality medicine to patients suffering from chronic and debilitating disease and provide them with a chance at a better quality of life.

NAME	ADDRESS	PHONE/EMAIL	SIGNATURE
KELSEY BASEHART	[redacted]	[redacted]	
David Dwark			
Arlene Wunsch			
LISA MISSERT			
MIKE MISSERT			
Jacqueline Sardel			
Joshua Tavano			
Jennifer Joseph			
William Vosphut			
Genevieve Rak			
JASON C. MCGIVERN			
AJ Swanson			

Please print, sign and mail petition back by TUESDAY, MAY 26, 2015 to:

Citiva Medical LLC
7378 Amboy Road
Staten Island, NY 10307

PETITION IN SUPPORT OF CITIVA MEDICAL

New York State has enacted a limited medical marijuana program to help treat people with certain conditions, including Cancer, HIV/AIDS, ALS, Parkinson's Disease, MS, Spinal Cord Damage, Epilepsy, Dravet Syndrome, Inflammatory Bowel Syndrome, Huntington's Disease and Neuropathy.

This program, administered through **the Department of Health, will finally bring relief to many suffering patients in New York.** The DOH will grant 5 licenses to operate as registered organizations (RO) allowed to grow, extract and dispense medical marijuana.

Led by preeminent medical cannabis advocate and entrepreneur Josh Stanley, **Citiva Medical is a New York State company specializing in safe and effective products based on the latest advancements in cannabinoid medicine.** Citiva Medical's mission also includes conducting research and developing partnerships with universities, hospitals and institutions across the state to **establish New York as the global epicenter for cannabinoid research.**

ROs are not all created equal. Standardization is of the utmost importance so that patients will receive consistent and safe doses of their medication. Citiva Medical will be the industry leader based upon their stringent standardization policies and procedures. Citiva Medical has a team with **over 100 combined years of experience in clinical healthcare and the medicinal cannabis industry** and will bring safe and effective products to patients in New York.

I **strongly support the New York State Department of Health granting RO status to Citiva Medical.** As a responsible leader in this industry, Citiva Medical will bring safe quality medicine to patients suffering from chronic and debilitating disease and provide them with a chance at a better quality of life.

NAME	ADDRESS	PHONE/EMAIL	SIGNATURE
Tommie H Tillett	[redacted]		
Cindy Montana			
Daniel Harding			
Vanessa DiMauro			
Ken Klos			
Paul Krupa			
Kelly Tillett			Kelly Tillett
Christopher Polizzi			
			Rohini Bhalla
Sharron Mazur			
David MAZUR			718 355 0623

Please print, sign and mail petition back by TUESDAY, MAY 26, 2015 to:
Citiva Medical LLC
7378 Amboy Road
Staten Island, NY 10307

PETITION IN SUPPORT OF CITIVA MEDICAL

New York State has enacted a limited medical marijuana program to help treat people with certain conditions, including Cancer, HIV/AIDS, ALS, Parkinson's Disease, MS, Spinal Cord Damage, Epilepsy, Dravet Syndrome, Inflammatory Bowel ndrome, Huntington's Disease and Neuropathy.

This program, administered through **the Department of Health, will finally bring relief to many suffering patients in New York.** The DOH will grant 5 licenses to operate as registered organizations (RO) allowed to grow, extract and dispense medical marijuana.

Led by preeminent medical cannabis advocate and entrepreneur Josh Stanley, **Citiva Medical is a New York State company specializing in safe and effective products based on the latest advancements in cannabinoid medicine.** Citiva Medical's mission also includes conducting research and developing partnerships with universities, hospitals and institutions across the state to **establish New York as the global epicenter for cannabinoid research.**

ROs are not all created equal. Standardization is of the utmost importance so that patients will receive consistent and safe doses of their medication. Citiva Medical will be the industry leader based upon their stringent standardization policies and procedures. Citiva Medical has a team with **over 100 combined years of experience in clinical healthcare and the medicinal cannabis industry** and will bring safe and effective products to patients in New York.

I strongly support the New York State Department of Health granting RO status to Citiva Medical. As a responsible leader in this industry, Citiva Medical will bring safe quality medicine to patients suffering from chronic and debilitating disease and provide them with a chance at a better quality of life.

NAME	ADDRESS	PHONE/EMAIL	SIGNATURE
Robert Cahill	[redacted]		
D. Valenza			
Anthony Lupo			
[illegible]			
Jacob Gehr			
Noelle Manso			
Kelli Handelman			
Jordan Podvesky			
Angelina Radwinski			
Stephen Bucaro			
[illegible]			
James Lupo			
[illegible]			
Jessica Giardino			

Please print, sign and mail petition back by TUESDAY, MAY 26, 2015 to:

Citiva Medical LLC
7378 Amboy Road
Staten Island, NY 10307

PETITION IN SUPPORT OF CITIVA MEDICAL

New York State has enacted a limited medical marijuana program to help treat people with certain conditions, including Cancer, HIV/AIDS, ALS, Parkinson's Disease, MS, Spinal Cord Damage, Epilepsy, Dravet Syndrome, Inflammatory Bowel ndrome, Huntington's Disease and Neuropathy.

This program, administered through **the Department of Health, will finally bring relief to many suffering patients in New York.** The DOH will grant 5 licenses to operate as registered organizations (RO) allowed to grow, extract and dispense medical marijuana.

Led by preeminent medical cannabis advocate and entrepreneur Josh Stanley, **Citiva Medical is a New York State company specializing in safe and effective products based on the latest advancements in cannabinoid medicine.** Citiva Medical's mission also includes conducting research and developing partnerships with universities, hospitals and institutions across the state to **establish New York as the global epicenter for cannabinoid research.**

ROs are not all created equal. Standardization is of the utmost importance so that patients will receive consistent and safe doses of their medication. Citiva Medical will be the industry leader based upon their stringent standardization policies and procedures. Citiva Medical has a team with **over 100 combined years of experience in clinical healthcare and the medicinal cannabis industry** and will bring safe and effective products to patients in New York.

I strongly support the New York State Department of Health granting RO status to Citiva Medical. As a responsible leader in this industry, Citiva Medical will bring safe quality medicine to patients suffering from chronic and debilitating disease and provide them with a chance at a better quality of life.

NAME	ADDRESS	PHONE/EMAIL	SIGNATURE
Robert Cahill	[redacted]		
John Valenza			
Chris Moore			
Lina Cerbone			
Gary Brower			
Philip Antico			
Louis Pugliese			
Philip Fonseca			
TRISTAN DUZANT			
Nico Casalino			
John Yoffredo			
Joe Marini			
LINDA B. Schulz			

Please print, sign and mail petition back by TUESDAY, MAY 26, 2015 to:
Citiva Medical LLC
7378 Amboy Road
Staten Island, NY 10307

PETITION IN SUPPORT OF CITIVA MEDICAL

ew York State has enacted a limited medical marijuana program to help treat people with certain conditions, including ancer, HIV/AIDS, ALS, Parkinson's Disease, MS, Spinal Cord Damage, Epilepsy, Dravet Syndrome, Inflammatory Bowel Syndrome, Huntington's Disease and Neuropathy.

This program, administered through **the Department of Health, will finally bring relief to many suffering patients in New York.** The DOH will grant 5 companies licenses to operate as registered organizations (RO) allowed to grow, extract and dispense medical marijuana.

Led by preeminent medical cannabis advocate and entrepreneur Josh Stanley, **Citiva Medical is a New York State company specializing in safe and effective products based on the latest advancements in cannabinoid medicine.** Citiva Medical's mission also includes conducting research and developing partnerships with universities, hospitals and institutions across the state to **establish New York as the global epicenter for cannabinoid research.**

ROs are not all created equal. Standardization is of the utmost importance so that patients will receive consistent and safe doses of their medication. Citiva Medical will be the industry leader based upon their stringent standardization policies and procedures. Citiva Medical has a team with **over 100 combined years of experience in clinical healthcare and the medicinal cannabis industry** and will bring safe and effective products to patients in New York.

I strongly support the New York State Department of Health granting RO status to Citiva Medical. As a responsible leader in this industry, Citiva Medical will bring safe quality medicine to patients suffering from chronic and debilitating disease and provide them with a chance at a better quality of life.

NAME	ADDRESS	PHONE/EMAIL	SIGNATURE
SAM BIONDO	[redacted]		
ROBERT MANZIONE			
Alana Hoorer			
Kim Mazza			
George Tropiano			
Armando Brown			
Elicia Brown			
Agmes Prendarga			
Mildred Gonzalez			
Karen Notaro			
Joseph Notaro			
Debra Baldwin			
y McCaffrey			
MYRT MARK			
Joseph AQUILINO			

PETITION IN SUPPORT OF CITIVA MEDICAL

w York State has enacted a limited medical marijuana program to help treat people with certain conditions, including ancer, HIV/AIDS, ALS, Parkinson's Disease, MS, Spinal Cord Damage, Epilepsy, Dravet Syndrome, Inflammatory Bowel Syndrome, Huntington's Disease and Neuropathy.

This program, administered through **the Department of Health, will finally bring relief to many suffering patients in New York.** The DOH will grant 5 companies licenses to operate as registered organizations (RO) allowed to grow, extract and dispense medical marijuana.

Led by preeminent medical cannabis advocate and entrepreneur Josh Stanley, **Citiva Medical is a New York State company specializing in safe and effective products based on the latest advancements in cannabinoid medicine.** Citiva Medical's mission also includes conducting research and developing partnerships with universities, hospitals and institutions across the state to **establish New York as the global epicenter for cannabinoid research.**

ROs are not all created equal. Standardization is of the utmost importance so that patients will receive consistent and safe doses of their medication. Citiva Medical will be the industry leader based upon their stringent standardization policies and procedures. Citiva Medical has a team with **over 100 combined years of experience in clinical healthcare and the medicinal cannabis industry** and will bring safe and effective products to patients in New York.

I strongly support the New York State Department of Health granting RO status to Citiva Medical. As a responsible leader in this industry, Citiva Medical will bring safe quality medicine to patients suffering from chronic and debilitating disease and provide them with a chance at a better quality of life.

NAME	ADDRESS	PHONE/EMAIL	SIGNATURE
Jaynee Gravino	[redacted]		
Donna Tinelli			
Gio Argento			
Elisa DeLuca			
Robert Deluca			
Margin fare Se			
Vincent J Mazz			
Alexandra Izzo			
Elena Garo			
Joseph Caldarola			
Vincent Caldarola			
Jeffrey Acaine			
rek Racca			
Melvin Jones Jr			
Ramzi ABDELH			

PETITION IN SUPPORT OF CITIVA MEDICAL

ew York State has enacted a limited medical marijuana program to help treat people with certain conditions, including ncer, HIV/AIDS, ALS, Parkinson's Disease, MS, Spinal Cord Damage, Epilepsy, Dravet Syndrome, Inflammatory Bowel Syndrome, Huntington's Disease and Neuropathy.

This program, administered through **the Department of Health, will finally bring relief to many suffering patients in New York.** The DOH will grant 5 companies licenses to operate as registered organizations (RO) allowed to grow, extract and dispense medical marijuana.

Led by preeminent medical cannabis advocate and entrepreneur Josh Stanley, **Citiva Medical is a New York State company specializing in safe and effective products based on the latest advancements in cannabinoid medicine.** Citiva Medical's mission also includes conducting research and developing partnerships with universities, hospitals and institutions across the state to **establish New York as the global epicenter for cannabinoid research.**

ROs are not all created equal. Standardization is of the utmost importance so that patients will receive consistent and safe doses of their medication. Citiva Medical will be the industry leader based upon their stringent standardization policies and procedures. Citiva Medical has a team with **over 100 combined years of experience in clinical healthcare and the medicinal cannabis industry** and will bring safe and effective products to patients in New York.

I strongly support the New York State Department of Health granting RO status to Citiva Medical. As a responsible leader in this industry, Citiva Medical will bring safe quality medicine to patients suffering from chronic and debilitating disease and provide them with a chance at a better quality of life.

NAME	ADDRESS	PHONE/EMAIL	SIGNATURE
[redacted]	[redacted]	[redacted]	[redacted]

PETITION IN SUPPORT OF CITIVA MEDICAL

New York State has enacted a limited medical marijuana program to help treat people with certain conditions, including Cancer, HIV/AIDS, ALS, Parkinson's Disease, MS, Spinal Cord Damage, Epilepsy, Dravet Syndrome, Inflammatory Bowel Syndrome, Huntington's Disease and Neuropathy.

This program, administered through **the Department of Health, will finally bring relief to many suffering patients in New York.** The DOH will grant 5 licenses to operate as registered organizations (RO) allowed to grow, extract and dispense medical marijuana.

Led by preeminent medical cannabis advocate and entrepreneur Josh Stanley, **Citiva Medical is a New York State company specializing in safe and effective products based on the latest advancements in cannabinoid medicine.** Citiva Medical's mission also includes conducting research and developing partnerships with universities, hospitals and institutions across the state to **establish New York as the global epicenter for cannabinoid research.**

ROs are not all created equal. Standardization is of the utmost importance so that patients will receive consistent and safe doses of their medication. Citiva Medical will be the industry leader based upon their stringent standardization policies and procedures. Citiva Medical has a team with **over 100 combined years of experience in clinical healthcare and the medicinal cannabis industry** and will bring safe and effective products to patients in New York.

I strongly support the New York State Department of Health granting RO status to Citiva Medical. As a responsible leader in this industry, Citiva Medical will bring safe quality medicine to patients suffering from chronic and debilitating disease and provide them with a chance at a better quality of life.

NAME	ADDRESS	PHONE/EMAIL	SIGNATURE
Nancy Babbitt	[redacted]		
Christine Lomb			
Theresa Esposito			
Christopher Fon			
Scott McGrath			
VICTOR J. SAPIEN			

Please print, sign and mail petition back by TUESDAY, MAY 26, 2015 to:
Citiva Medical LLC
7378 Amboy Road
Staten Island, NY 10307

PETITION IN SUPPORT OF CITIVA MEDICAL

New York State has enacted a limited medical marijuana program to help treat people with certain conditions, including Cancer, HIV/AIDS, ALS, Parkinson's Disease, MS, Spinal Cord Damage, Epilepsy, Dravet Syndrome, Inflammatory Bowel ndrome, Huntington's Disease and Neuropathy.

This program, administered through **the Department of Health, will finally bring relief to many suffering patients in New York.** The DOH will grant 5 licenses to operate as registered organizations (RO) allowed to grow, extract and dispense medical marijuana.

Led by preeminent medical cannabis advocate and entrepreneur Josh Stanley, **Citiva Medical is a New York State company specializing in safe and effective products based on the latest advancements in cannabinoid medicine.** Citiva Medical's mission also includes conducting research and developing partnerships with universities, hospitals and institutions across the state to **establish New York as the global epicenter for cannabinoid research.**

ROs are not all created equal. Standardization is of the utmost importance so that patients will receive consistent and safe doses of their medication. Citiva Medical will be the industry leader based upon their stringent standardization policies and procedures. Citiva Medical has a team with **over 100 combined years of experience in clinical healthcare and the medicinal cannabis industry** and will bring safe and effective products to patients in New York.

I strongly support the New York State Department of Health granting RO status to Citiva Medical. As a responsible leader in this industry, Citiva Medical will bring safe quality medicine to patients suffering from chronic and debilitating disease and provide them with a chance at a better quality of life.

NAME	SIGNATURE
Robert Zercit	
Francine Delardas	
Diane Izzo	
Robert Dowling	
Heidi Dowling	
Leonard Popper	
MaryLou Malone	
LINDA MAROTTE	
Rocco F. MARO	
Carol Laterra	
Rosalie Sconolfi	
Concetta Ruggiero	

Please print, sign and mail petition back by TUESDAY, MAY 26, 2015 to:
Citiva Medical LLC
7378 Amboy Road
Staten Island, NY 10307

PETITION IN SUPPORT OF CITIVA MEDICAL

New York State has enacted a limited medical marijuana program to help treat people with certain conditions, including Cancer, HIV/AIDS, ALS, Parkinson's Disease, MS, Spinal Cord Damage, Epilepsy, Dravet Syndrome, Inflammatory Bowel Syndrome, Huntington's Disease and Neuropathy.

This program, administered through **the Department of Health, will finally bring relief to many suffering patients in New York.** The DOH will grant 5 licenses to operate as registered organizations (RO) allowed to grow, extract and dispense medical marijuana.

Led by preeminent medical cannabis advocate and entrepreneur Josh Stanley, **Citiva Medical is a New York State company specializing in safe and effective products based on the latest advancements in cannabinoid medicine.** Citiva Medical's mission also includes conducting research and developing partnerships with universities, hospitals and institutions across the state to **establish New York as the global epicenter for cannabinoid research.**

ROs are not all created equal. Standardization is of the utmost importance so that patients will receive consistent and safe doses of their medication. Citiva Medical will be the industry leader based upon their stringent standardization policies and procedures. Citiva Medical has a team with **over 100 combined years of experience in clinical healthcare and the medicinal cannabis industry** and will bring safe and effective products to patients in New York.

I strongly support the New York State Department of Health granting RO status to Citiva Medical. As a responsible leader in this industry, Citiva Medical will bring safe quality medicine to patients suffering from chronic and debilitating disease and provide them with a chance at a better quality of life.

NAME	ADDRESS	PHONE/EMAIL	SIGNATURE
[illegible]	[redacted]	[redacted]	[illegible]
Ashley M. Nieves			[illegible]
Joshua Anderson			[illegible]
Juan Torres			Juan Torres
Ruby Gorlin			[illegible]
Karen S. G.			[illegible]
Edward Peña			[illegible]
JASON Lopez			[illegible]
LARRY MILLER			[illegible]
Johnny DAVIS			[illegible]
Quinta Witzel			[illegible]
Eric Mackins			[illegible]
Rene Estevez			[illegible]

Please print, sign and mail petition back by TUESDAY, MAY 26, 2015 to:
Citiva Medical LLC
7378 Amboy Road
Staten Island, NY 10307

PETITION IN SUPPORT OF CITIVA MEDICAL

New York State has enacted a limited medical marijuana program to help treat people with certain conditions, including Cancer, HIV/AIDS, ALS, Parkinson's Disease, MS, Spinal Cord Damage, Epilepsy, Dravet Syndrome, Inflammatory Bowel Syndrome, Huntington's Disease and Neuropathy.

This program, administered through **the Department of Health, will finally bring relief to many suffering patients in New York.** The DOH will grant 5 licenses to operate as registered organizations (RO) allowed to grow, extract and dispense medical marijuana.

Led by preeminent medical cannabis advocate and entrepreneur Josh Stanley, **Citiva Medical is a New York State company specializing in safe and effective products based on the latest advancements in cannabinoid medicine.** Citiva Medical's mission also includes conducting research and developing partnerships with universities, hospitals and institutions across the state to **establish New York as the global epicenter for cannabinoid research.**

ROs are not all created equal. Standardization is of the utmost importance so that patients will receive consistent and safe doses of their medication. Citiva Medical will be the industry leader based upon their stringent standardization policies and procedures. Citiva Medical has a team with **over 100 combined years of experience in clinical healthcare and the medicinal cannabis industry** and will bring safe and effective products to patients in New York.

I strongly support the New York State Department of Health granting RO status to Citiva Medical. As a responsible leader in this industry, Citiva Medical will bring safe quality medicine to patients suffering from chronic and debilitating disease and provide them with a chance at a better quality of life.

NAME	ADDRESS	PHONE/EMAIL	SIGNATURE
Armaan	[redacted]		Armaan
Araujo			
BENNETT			
Lee			
Juan Jimenez			
Kisha Ford			
Delilah Perez			
Nelson Cortez			
Nicole Cruz			
Jonathan Castro			
Amira Roberts			AR
Miguel Marquez			646-342-3308
Victor Santiago			

Please print, sign and mail petition back by TUESDAY, MAY 26, 2015 to:
Citiva Medical LLC
7378 Amboy Road
Staten Island, NY 10307

PETITION IN SUPPORT OF CITIVA MEDICAL

New York State has enacted a limited medical marijuana program to help treat people with certain conditions, including Cancer, HIV/AIDS, ALS, Parkinson's Disease, MS, Spinal Cord Damage, Epilepsy, Dravet Syndrome, Inflammatory Bowel Syndrome, Huntington's Disease and Neuropathy.

This program, administered through **the Department of Health, will finally bring relief to many suffering patients in New York.** The DOH will grant 5 licenses to operate as registered organizations (RO) allowed to grow, extract and dispense medical marijuana.

Led by preeminent medical cannabis advocate and entrepreneur Josh Stanley, **Citiva Medical is a New York State company specializing in safe and effective products based on the latest advancements in cannabinoid medicine.** Citiva Medical's mission also includes conducting research and developing partnerships with universities, hospitals and institutions across the state to **establish New York as the global epicenter for cannabinoid research.**

ROs are not all created equal. Standardization is of the utmost importance so that patients will receive consistent and safe doses of their medication. Citiva Medical will be the industry leader based upon their stringent standardization policies and procedures. Citiva Medical has a team with **over 100 combined years of experience in clinical healthcare and the medicinal cannabis industry** and will bring safe and effective products to patients in New York.

I strongly support the New York State Department of Health granting RO status to Citiva Medical. As a responsible leader in this industry, Citiva Medical will bring safe quality medicine to patients suffering from chronic and debilitating disease and provide them with a chance at a better quality of life.

NAME	ADDRESS	PHONE/EMAIL	SIGNATURE
Judith Schneider	[redacted]		
Jane Warren			
Amy Brunetti			
Omar Santos			
Lauren Galbo			
Alina Arakelyan			
Tashana Diaz			
Kazbek Kanayev			
Tatyana Dudnik			
Andres J. Nieves			
Oleg Polovets			
Jack Nuñez			
Shelley Eisenberg			

Please print, sign and mail petition back by TUESDAY, MAY 26, 2015 to:
Citiva Medical LLC
7378 Amboy Road
Staten Island, NY 10307

Petition in Support of Citiva Medical

New York State has enacted a limited medical marijuana program to help treat people with certain conditions, including Cancer, HIV/AIDS, ALS, Parkinson's Disease, MS, Spinal Cord Damage, Epilepsy, Dravet Syndrome, Inflammatory Bowel Syndrome, Huntington's Disease and Neuropathy.

This program, administered through **the Department of Health, will finally bring relief to many suffering patients in New York.** The DOH will grant 5 licenses to operate as registered organizations (RO) allowed to grow, extract and dispense medical marijuana.

Led by preeminent medical cannabis advocate and entrepreneur Josh Stanley, **Citiva Medical is a New York State company specializing in safe and effective products based on the latest advancements in cannabinoid medicine.** Citiva Medical's mission also includes conducting research and developing partnerships with universities, hospitals and institutions across the state to **establish New York as the global epicenter for cannabinoid research.**

ROs are not all created equal. Standardization is of the utmost importance so that patients will receive consistent and safe doses of their medication. Citiva Medical will be the industry leader based upon their stringent standardization policies and procedures. Citiva Medical has a team with **over 100 combined years of experience in clinical healthcare and the medicinal cannabis industry** and will bring safe and effective products to patients in New York.

I strongly support the New York State Department of Health granting RO status to Citiva Medical. As a responsible leader in this industry, Citiva Medical will bring safe quality medicine to patients suffering from chronic and debilitating disease and provide them with a chance at a better quality of life.

NAME	ADDRESS	PHONE/EMAIL	SIGNATURE
Vince Mojica	[redacted]	[redacted]	[signature]
Jason Portuguez	[redacted]	[redacted]	[signature]
Johnny King	[redacted]	[redacted]	[signature]
Alberto Acevedo	[redacted]	[redacted]	[signature]
Kareem Patterson	[redacted]	[redacted]	[signature]
Desiree Jeune	[redacted]	[redacted]	[signature]
Felix Rodriquez	[redacted]	[redacted]	[signature]
Nicholas Feliciano	[redacted]	[redacted]	[signature]
Leo Frampton	[redacted]	[redacted]	[signature]
Hector Velez	[redacted]	[redacted]	[signature]
Rashim Anderson	[redacted]	[redacted]	[signature]
[illegible]	[redacted]	[redacted]	[signature]
David Sanchez	[redacted]	[redacted]	[signature]

Please print, sign and mail petition back by TUESDAY, MAY 26, 2015 to:
Citiva Medical LLC
7378 Amboy Road
Staten Island, NY 10307

PETITION IN SUPPORT OF CITIVA MEDICAL

New York State has enacted a limited medical marijuana program to help treat people with certain conditions, including Cancer, HIV/AIDS, ALS, Parkinson's Disease, MS, Spinal Cord Damage, Epilepsy, Dravet Syndrome, Inflammatory Bowel Syndrome, Huntington's Disease and Neuropathy.

This program, administered through **the Department of Health, will finally bring relief to many suffering patients in New York.** The DOH will grant 5 licenses to operate as registered organizations (RO) allowed to grow, extract and dispense medical marijuana.

Led by preeminent medical cannabis advocate and entrepreneur Josh Stanley, **Citiva Medical is a New York State company specializing in safe and effective products based on the latest advancements in cannabinoid medicine.** Citiva Medical's mission also includes conducting research and developing partnerships with universities, hospitals and institutions across the state to **establish New York as the global epicenter for cannabinoid research.**

ROs are not all created equal. Standardization is of the utmost importance so that patients will receive consistent and safe doses of their medication. Citiva Medical will be the industry leader based upon their stringent standardization policies and procedures. Citiva Medical has a team with **over 100 combined years of experience in clinical healthcare and the medicinal cannabis industry** and will bring safe and effective products to patients in New York.

I strongly support the New York State Department of Health granting RO status to Citiva Medical. As a responsible leader in this industry, Citiva Medical will bring safe quality medicine to patients suffering from chronic and debilitating disease and provide them with a chance at a better quality of life.

NAME	ADDRESS	PHONE/EMAIL	SIGNATURE
Kendra Harris	[redacted]	[redacted]	[redacted]
Maribel Dalmasi			
Roberto Rodriguez			
Megan Yulfo			
Karen Miller			
OMAR Ruiz			
Allyciaallen			
MANUEL SANTANA			
Soraida Velez			
Asiahrie Zayas			
Hojin Kim			
Lisa Ortiz			
Eddie Bernard			

Please print, sign and mail petition back by TUESDAY, MAY 26, 2015 to:
Citiva Medical LLC
7378 Amboy Road
Staten Island, NY 10307

PETITION IN SUPPORT OF CITIVA MEDICAL

New York State has enacted a limited medical marijuana program to help treat people with certain conditions, including Cancer, HIV/AIDS, ALS, Parkinson's Disease, MS, Spinal Cord Damage, Epilepsy, Dravet Syndrome, Inflammatory Bowel Syndrome, Huntington's Disease and Neuropathy.

This program, administered through **the Department of Health, will finally bring relief to many suffering patients in New York.** The DOH will grant 5 licenses to operate as registered organizations (RO) allowed to grow, extract and dispense medical marijuana.

Led by preeminent medical cannabis advocate and entrepreneur Josh Stanley, **Citiva Medical is a New York State company specializing in safe and effective products based on the latest advancements in cannabinoid medicine.** Citiva Medical's mission also includes conducting research and developing partnerships with universities, hospitals and institutions across the state to **establish New York as the global epicenter for cannabinoid research.**

ROs are not all created equal. Standardization is of the utmost importance so that patients will receive consistent and safe doses of their medication. Citiva Medical will be the industry leader based upon their stringent standardization policies and procedures. Citiva Medical has a team with **over 100 combined years of experience in clinical healthcare and the medicinal cannabis industry** and will bring safe and effective products to patients in New York.

I strongly support the New York State Department of Health granting RO status to Citiva Medical. As a responsible leader in this industry, Citiva Medical will bring safe quality medicine to patients suffering from chronic and debilitating disease and provide them with a chance at a better quality of life.

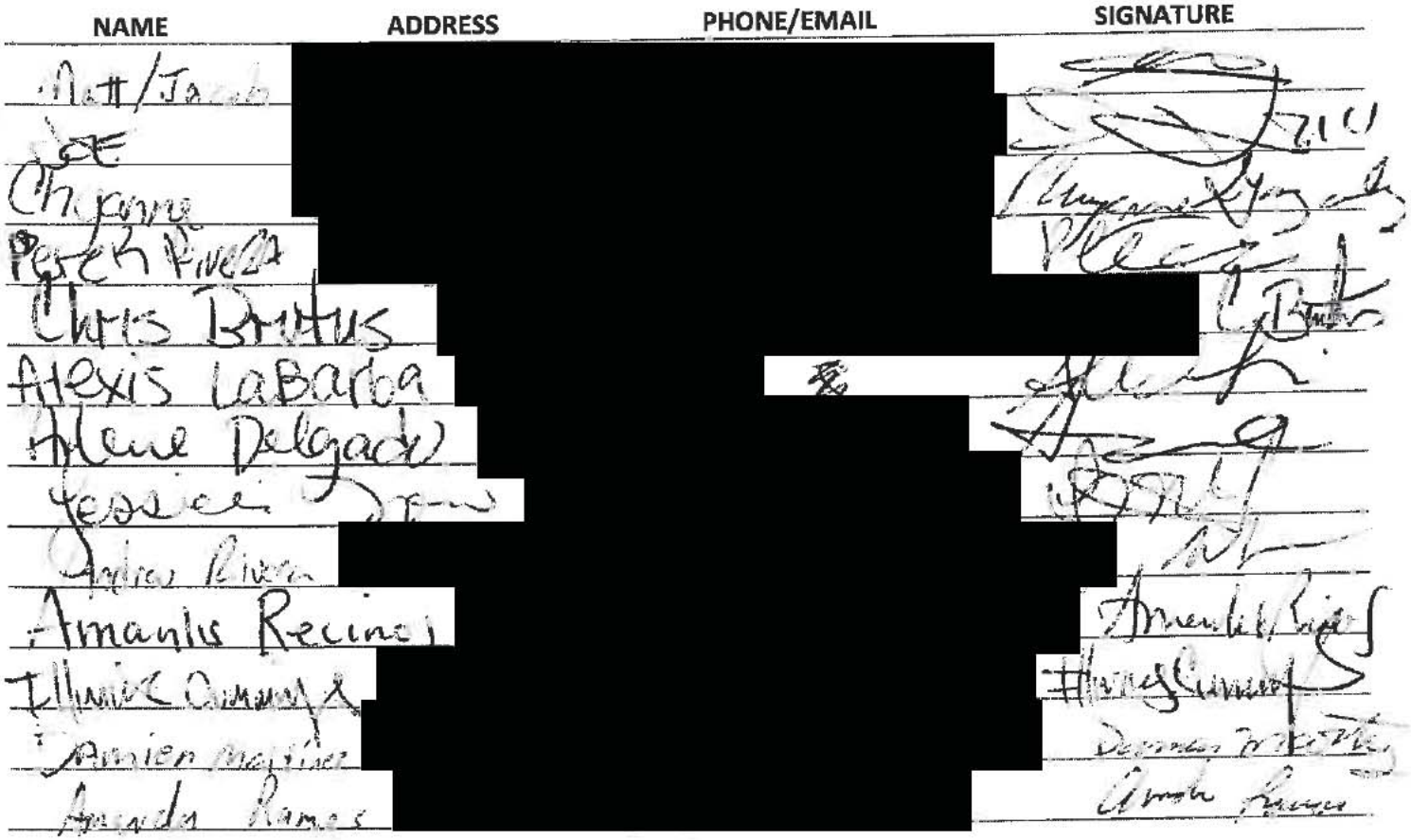

Please print, sign and mail petition back by TUESDAY, MAY 26, 2015 to:
Citiva Medical LLC
7378 Amboy Road
Staten Island, NY 10307

PETITION IN SUPPORT OF CITIVA MEDICAL

New York State has enacted a limited medical marijuana program to help treat people with certain conditions, including Cancer, HIV/AIDS, ALS, Parkinson's Disease, MS, Spinal Cord Damage, Epilepsy, Dravet Syndrome, Inflammatory Bowel Syndrome, Huntington's Disease and Neuropathy.

This program, administered through **the Department of Health, will finally bring relief to many suffering patients in New York.** The DOH will grant 5 licenses to operate as registered organizations (RO) allowed to grow, extract and dispense medical marijuana.

Led by preeminent medical cannabis advocate and entrepreneur Josh Stanley, **Citiva Medical is a New York State company specializing in safe and effective products based on the latest advancements in cannabinoid medicine.** Citiva Medical's mission also includes conducting research and developing partnerships with universities, hospitals and institutions across the state to **establish New York as the global epicenter for cannabinoid research.**

ROs are not all created equal. Standardization is of the utmost importance so that patients will receive consistent and safe doses of their medication. Citiva Medical will be the industry leader based upon their stringent standardization policies and procedures. Citiva Medical has a team with **over 100 combined years of experience in clinical healthcare and the medicinal cannabis industry** and will bring safe and effective products to patients in New York.

I strongly support the New York State Department of Health granting RO status to Citiva Medical. As a responsible leader in this industry, Citiva Medical will bring safe quality medicine to patients suffering from chronic and debilitating disease and provide them with a chance at a better quality of life.

NAME	ADDRESS	PHONE/EMAIL	SIGNATURE
Andrew	Rivera	[redacted]	
FRANK	DIAMEDON		
Imron	Williams		
XAVIER	Rodriguez		
RALPH	TOZO		
Cory	Seymour		
Robert			
Madeline	Matotek		
Sabana	Jones		
Kayla	Brown		
Damien	Martinez		
Steven	OSPINO		
Eric	Oliver		

Please print, sign and mail petition back by TUESDAY, MAY 26, 2015 to:
Citiva Medical LLC
7378 Amboy Road
Staten Island, NY 10307

PETITION IN SUPPORT OF CITIVA MEDICAL

New York State has enacted a limited medical marijuana program to help treat people with certain conditions, including Cancer, HIV/AIDS, ALS, Parkinson's Disease, MS, Spinal Cord Damage, Epilepsy, Dravet Syndrome, Inflammatory Bowel Syndrome, Huntington's Disease and Neuropathy.

This program, administered through **the Department of Health, will finally bring relief to many suffering patients in New York.** The DOH will grant 5 licenses to operate as registered organizations (RO) allowed to grow, extract and dispense medical marijuana.

Led by preeminent medical cannabis advocate and entrepreneur Josh Stanley, **Citiva Medical is a New York State company specializing in safe and effective products based on the latest advancements in cannabinoid medicine.** Citiva Medical's mission also includes conducting research and developing partnerships with universities, hospitals and institutions across the state to **establish New York as the global epicenter for cannabinoid research.**

ROs are not all created equal. Standardization is of the utmost importance so that patients will receive consistent and safe doses of their medication. Citiva Medical will be the industry leader based upon their stringent standardization policies and procedures. Citiva Medical has a team with **over 100 combined years of experience in clinical healthcare and the medicinal cannabis industry** and will bring safe and effective products to patients in New York.

I strongly support the New York State Department of Health granting RO status to Citiva Medical. As a responsible leader in this industry, Citiva Medical will bring safe quality medicine to patients suffering from chronic and debilitating disease and provide them with a chance at a better quality of life.

NAME	ADDRESS	PHONE/EMAIL	SIGNATURE
Tamara Rodriguez	[redacted]	[redacted]	[redacted]
Veronica Medina			
Victor Vazquez			
Malek Nasir			
Terrance Hyde			
Bobbie Hicks			
John Reyes			
James Bidin			
Paul Diaz			
Cindy Rivera			
Adolph Spitz			
Edwin Mercado			
Anita Cuthbert			

Please print, sign and mail petition back by TUESDAY, MAY 26, 2015 to:
Citiva Medical LLC
7378 Amboy Road
Staten Island, NY 10307

PETITION IN SUPPORT OF CITIVA MEDICAL

New York State has enacted a limited medical marijuana program to help treat people with certain conditions, including Cancer, HIV/AIDS, ALS, Parkinson's Disease, MS, Spinal Cord Damage, Epilepsy, Dravet Syndrome, Inflammatory Bowel Syndrome, Huntington's Disease and Neuropathy.

This program, administered through **the Department of Health, will finally bring relief to many suffering patients in New York.** The DOH will grant 5 licenses to operate as registered organizations (RO) allowed to grow, extract and dispense medical marijuana.

Led by preeminent medical cannabis advocate and entrepreneur Josh Stanley, **Citiva Medical is a New York State company specializing in safe and effective products based on the latest advancements in cannabinoid medicine.** Citiva Medical's mission also includes conducting research and developing partnerships with universities, hospitals and institutions across the state to **establish New York as the global epicenter for cannabinoid research.**

ROs are not all created equal. Standardization is of the utmost importance so that patients will receive consistent and safe doses of their medication. Citiva Medical will be the industry leader based upon their stringent standardization policies and procedures. Citiva Medical has a team with **over 100 combined years of experience in clinical healthcare and the medicinal cannabis industry** and will bring safe and effective products to patients in New York.

I strongly support the New York State Department of Health granting RO status to Citiva Medical. As a responsible leader in this industry, Citiva Medical will bring safe quality medicine to patients suffering from chronic and debilitating disease and provide them with a chance at a better quality of life.

NAME	ADDRESS	PHONE/EMAIL	SIGNATURE
John Franzoza	[redacted]		
Jose Collado			
Yoshif Brown			
Brandon ROY			
Rec.A Gellizea			
Hwanee Crew			
Alejandro Montalvo			
Lawrence Williams			
Jovan Asaff			
D Hayes			
E-M-Black			
Carolina Jean			
Arnulfo Cazares			

Please print, sign and mail petition back by TUESDAY, MAY 26, 2015 to:
Citiva Medical LLC
7378 Amboy Road
Staten Island, NY 10307

PETITION IN SUPPORT OF CITIVA MEDICAL

New York State has enacted a limited medical marijuana program to help treat people with certain conditions, including Cancer, HIV/AIDS, ALS, Parkinson's Disease, MS, Spinal Cord Damage, Epilepsy, Dravet Syndrome, Inflammatory Bowel Syndrome, Huntington's Disease and Neuropathy.

This program, administered through **the Department of Health, will finally bring relief to many suffering patients in New York.** The DOH will grant 5 licenses to operate as registered organizations (RO) allowed to grow, extract and dispense medical marijuana.

Led by preeminent medical cannabis advocate and entrepreneur Josh Stanley, **Citiva Medical is a New York State company specializing in safe and effective products based on the latest advancements in cannabinoid medicine.** Citiva Medical's mission also includes conducting research and developing partnerships with universities, hospitals and institutions across the state to **establish New York as the global epicenter for cannabinoid research.**

ROs are not all created equal. Standardization is of the utmost importance so that patients will receive consistent and safe doses of their medication. Citiva Medical will be the industry leader based upon their stringent standardization policies and procedures. Citiva Medical has a team with **over 100 combined years of experience in clinical healthcare and the medicinal cannabis industry** and will bring safe and effective products to patients in New York.

I strongly support the New York State Department of Health granting RO status to Citiva Medical. As a responsible leader in this industry, Citiva Medical will bring safe quality medicine to patients suffering from chronic and debilitating disease and provide them with a chance at a better quality of life.

NAME	ADDRESS	[redacted]	SIGNATURE
Anthony Ortiz			
Louie Perez			
Bo Don			
Jaina Shirley			
Christianne Cook			
Jacob Zuckerman			
Alex Figueroa			
Jacob Blauner			

Please print, sign and mail petition back by TUESDAY, MAY 26, 2015 to:
Citiva Medical LLC
7378 Amboy Road
Staten Island, NY 10307

PETITION IN SUPPORT OF CITIVA MEDICAL

New York State has enacted a limited medical marijuana program to help treat people with certain conditions, including Cancer, HIV/AIDS, ALS, Parkinson's Disease, MS, Spinal Cord Damage, Epilepsy, Dravet Syndrome, Inflammatory Bowel Syndrome, Huntington's Disease and Neuropathy.

This program, administered through **the Department of Health, will finally bring relief to many suffering patients in New York.** The DOH will grant 5 licenses to operate as registered organizations (RO) allowed to grow, extract and dispense medical marijuana.

Led by preeminent medical cannabis advocate and entrepreneur Josh Stanley, **Citiva Medical is a New York State company specializing in safe and effective products based on the latest advancements in cannabinoid medicine.** Citiva Medical's mission also includes conducting research and developing partnerships with universities, hospitals and institutions across the state to **establish New York as the global epicenter for cannabinoid research.**

ROs are not all created equal. Standardization is of the utmost importance so that patients will receive consistent and safe doses of their medication. Citiva Medical will be the industry leader based upon their stringent standardization policies and procedures. Citiva Medical has a team with **over 100 combined years of experience in clinical healthcare and the medicinal cannabis industry** and will bring safe and effective products to patients in New York.

I **strongly support the New York State Department of Health granting RO status to Citiva Medical.** As a responsible leader in this industry, Citiva Medical will bring safe quality medicine to patients suffering from chronic and debilitating disease and provide them with a chance at a better quality of life.

NAME	ADDRESS	PHONE/EMAIL	SIGNATURE
Billy Cabrera	[redacted]	[redacted]	[redacted]
Audre Booker			
Will My			
Robert Moye			
Brynn Foley			
Daniel Dart			
Cyller Baker			
Matt Ro			
Arianna Whyte			
Pharoah Miller			
Adam Mrlik			
Sara Chandhur.			
Abergel David			

Please print, sign and mail petition back by TUESDAY, MAY 26, 2015 to:
Citiva Medical LLC
7378 Amboy Road
Staten Island, NY 10307

PETITION IN SUPPORT OF CITIVA MEDICAL

New York State has enacted a limited medical marijuana program to help treat people with certain conditions, including Cancer, HIV/AIDS, ALS, Parkinson's Disease, MS, Spinal Cord Damage, Epilepsy, Dravet Syndrome, Inflammatory Bowel Syndrome, Huntington's Disease and Neuropathy.

This program, administered through **the Department of Health, will finally bring relief to many suffering patients in New York.** The DOH will grant 5 licenses to operate as registered organizations (RO) allowed to grow, extract and dispense medical marijuana.

Led by preeminent medical cannabis advocate and entrepreneur Josh Stanley, **Citiva Medical is a New York State company specializing in safe and effective products based on the latest advancements in cannabinoid medicine.** Citiva Medical's mission also includes conducting research and developing partnerships with universities, hospitals and institutions across the state to **establish New York as the global epicenter for cannabinoid research.**

ROs are not all created equal. Standardization is of the utmost importance so that patients will receive consistent and safe doses of their medication. Citiva Medical will be the industry leader based upon their stringent standardization policies and procedures. Citiva Medical has a team with **over 100 combined years of experience in clinical healthcare and the medicinal cannabis industry** and will bring safe and effective products to patients in New York.

I strongly support the New York State Department of Health granting RO status to Citiva Medical. As a responsible leader in this industry, Citiva Medical will bring safe quality medicine to patients suffering from chronic and debilitating disease and provide them with a chance at a better quality of life.

NAME	ADDRESS	PHONE/EMAIL	SIGNATURE
Willie Baez	[redacted]		
Simon Fargeon			
Kevin Jackson			
B. Alexander			
Isabella O'Neal			
Vincent Wells			
Patricia Kirkpatrick			
Kawami Grant			
Roberto Vasquez			
Chad Grigg			
Patrick Samuel			
[illegible]			

Please print, sign and mail petition back by TUESDAY, MAY 26, 2015 to:
Citiva Medical LLC
7378 Amboy Road
Staten Island, NY 10307

PETITION IN SUPPORT OF CITIVA MEDICAL

New York State has enacted a limited medical marijuana program to help treat people with certain conditions, including Cancer, HIV/AIDS, ALS, Parkinson's Disease, MS, Spinal Cord Damage, Epilepsy, Dravet Syndrome, Inflammatory Bowel Syndrome, Huntington's Disease and Neuropathy.

This program, administered through **the Department of Health, will finally bring relief to many suffering patients in New York.** The DOH will grant 5 licenses to operate as registered organizations (RO) allowed to grow, extract and dispense medical marijuana.

Led by preeminent medical cannabis advocate and entrepreneur Josh Stanley, **Citiva Medical is a New York State company specializing in safe and effective products based on the latest advancements in cannabinoid medicine.** Citiva Medical's mission also includes conducting research and developing partnerships with universities, hospitals and institutions across the state to **establish New York as the global epicenter for cannabinoid research.**

ROs are not all created equal. Standardization is of the utmost importance so that patients will receive consistent and safe doses of their medication. Citiva Medical will be the industry leader based upon their stringent standardization policies and procedures. Citiva Medical has a team with **over 100 combined years of experience in clinical healthcare and the medicinal cannabis industry** and will bring safe and effective products to patients in New York.

I strongly support the New York State Department of Health granting RO status to Citiva Medical. As a responsible leader in this industry, Citiva Medical will bring safe quality medicine to patients suffering from chronic and debilitating disease and provide them with a chance at a better quality of life.

NAME	ADDRESS	PHONE/EMAIL	SIGNATURE
Adorno Johnny	[redacted]	[redacted]	
James McKinney			
[illegible] Rodriguez			
Patrick O'Donnell			
Sergio Maldonado			
Jeff Gonzalez			
[illegible]			
Joshua Soto			
Maria Jano			
[illegible]			
Angela Ayala			
Marilyn Perez			
Eddie Ramos			

Please print, sign and mail petition back by TUESDAY, MAY 26, 2015 to:
Citiva Medical LLC
7378 Amboy Road
Staten Island, NY 10307

PETITION IN SUPPORT OF CITIVA MEDICAL

New York State has enacted a limited medical marijuana program to help treat people with certain conditions, including Cancer, HIV/AIDS, ALS, Parkinson's Disease, MS, Spinal Cord Damage, Epilepsy, Dravet Syndrome, Inflammatory Bowel Syndrome, Huntington's Disease and Neuropathy.

This program, administered through **the Department of Health, will finally bring relief to many suffering patients in New York.** The DOH will grant 5 licenses to operate as registered organizations (RO) allowed to grow, extract and dispense medical marijuana.

Led by preeminent medical cannabis advocate and entrepreneur Josh Stanley, **Citiva Medical is a New York State company specializing in safe and effective products based on the latest advancements in cannabinoid medicine.** Citiva Medical's mission also includes conducting research and developing partnerships with universities, hospitals and institutions across the state to **establish New York as the global epicenter for cannabinoid research.**

ROs are not all created equal. Standardization is of the utmost importance so that patients will receive consistent and safe doses of their medication. Citiva Medical will be the industry leader based upon their stringent standardization policies and procedures. Citiva Medical has a team with **over 100 combined years of experience in clinical healthcare and the medicinal cannabis industry** and will bring safe and effective products to patients in New York.

I strongly support the New York State Department of Health granting RO status to Citiva Medical. As a responsible leader in this industry, Citiva Medical will bring safe quality medicine to patients suffering from chronic and debilitating disease and provide them with a chance at a better quality of life.

NAME	ADDRESS	PHONE/EMAIL	SIGNATURE
Samantha Caridi	[redacted]		
Donna Kalyanoski			
Jennette Buonpastore			
Lauren Cavagnaro			
John Gilhooly			
Catherine Schmidt			
Katie Fitzgerald			
Jenna Mazzeo			
Christine Bobe			
Lauren Libecci			
Christine Robb			
Mary Fay			
Nancy Becker			

Please print, sign and mail petition back by TUESDAY, MAY 26, 2015 to:
Citiva Medical LLC
7378 Amboy Road
Staten Island, NY 10307

PETITION IN SUPPORT OF CITIVA MEDICAL

New York State has enacted a limited medical marijuana program to help treat people with certain conditions, including Cancer, HIV/AIDS, ALS, Parkinson's Disease, MS, Spinal Cord Damage, Epilepsy, Dravet Syndrome, Inflammatory Bowel Syndrome, Huntington's Disease and Neuropathy.

This program, administered through **the Department of Health, will finally bring relief to many suffering patients in New York.** The DOH will grant 5 licenses to operate as registered organizations (RO) allowed to grow, extract and dispense medical marijuana.

Led by preeminent medical cannabis advocate and entrepreneur Josh Stanley, **Citiva Medical is a New York State company specializing in safe and effective products based on the latest advancements in cannabinoid medicine.** Citiva Medical's mission also includes conducting research and developing partnerships with universities, hospitals and institutions across the state to **establish New York as the global epicenter for cannabinoid research.**

ROs are not all created equal. Standardization is of the utmost importance so that patients will receive consistent and safe doses of their medication. Citiva Medical will be the industry leader based upon their stringent standardization policies and procedures. Citiva Medical has a team with **over 100 combined years of experience in clinical healthcare and the medicinal cannabis industry** and will bring safe and effective products to patients in New York.

I strongly support the New York State Department of Health granting RO status to Citiva Medical. As a responsible leader in this industry, Citiva Medical will bring safe quality medicine to patients suffering from chronic and debilitating disease and provide them with a chance at a better quality of life.

NAME	ADDRESS	PHONE/EMAIL	SIGNATURE
Barbara Mazza	[redacted]		Barbara Mazza
Maureen Brophy			Maureen Brophy
FRANCES SISTO			
Vincent M. Sisto			
JUSTINE CANNON			Justine Cannon
Madalyn Jacunski			
James Cannon			
Lucille Russo			
Patricia Russo			P Russo
Robert Russo			R Russo
Catherine Carido			C Carido
Regina Quinn			
CHET Checkett			

Please print, sign and mail petition back by TUESDAY, MAY 26, 2015 to:
Citiva Medical LLC
7378 Amboy Road
Staten Island, NY 10307

PETITION IN SUPPORT OF CITIVA MEDICAL

New York State has enacted a limited medical marijuana program to help treat people with certain conditions, including Cancer, HIV/AIDS, ALS, Parkinson's Disease, MS, Spinal Cord Damage, Epilepsy, Dravet Syndrome, Inflammatory Bowel Syndrome, Huntington's Disease and Neuropathy.

This program, administered through **the Department of Health, will finally bring relief to many suffering patients in New York.** The DOH will grant 5 licenses to operate as registered organizations (RO) allowed to grow, extract and dispense medical marijuana.

Led by preeminent medical cannabis advocate and entrepreneur Josh Stanley, **Citiva Medical is a New York State company specializing in safe and effective products based on the latest advancements in cannabinoid medicine.** Citiva Medical's mission also includes conducting research and developing partnerships with universities, hospitals and institutions across the state to **establish New York as the global epicenter for cannabinoid research.**

ROs are not all created equal. Standardization is of the utmost importance so that patients will receive consistent and safe doses of their medication. Citiva Medical will be the industry leader based upon their stringent standardization policies and procedures. Citiva Medical has a team with **over 100 combined years of experience in clinical healthcare and the medicinal cannabis industry** and will bring safe and effective products to patients in New York.

I strongly support the New York State Department of Health granting RO status to Citiva Medical. As a responsible leader in this industry, Citiva Medical will bring safe quality medicine to patients suffering from chronic and debilitating disease and provide them with a chance at a better quality of life.

NAME	ADDRESS	PHONE/EMAIL	SIGNATURE
Vicky Lougiakis	[redacted]		
Elaine Marzorati			
Michelle Pratt			
Carmela Fulton			
Annemarie Pistilli			
Rebecca Pistilli			
Erica Cappiello			
Danielle Cipriano			
Joan Tortorici			
Lori Mazzeo			
Karen Carroll			
Victoria Agnello			
M Rogalinski			

Please print, sign and mail petition back by TUESDAY, MAY 26, 2015 to:
Citiva Medical LLC
7378 Amboy Road
Staten Island, NY 10307

PETITION IN SUPPORT OF CITIVA MEDICAL

New York State has enacted a limited medical marijuana program to help treat people with certain conditions, including Cancer, HIV/AIDS, ALS, Parkinson's Disease, MS, Spinal Cord Damage, Epilepsy, Dravet Syndrome, Inflammatory Bowel Syndrome, Huntington's Disease and Neuropathy.

This program, administered through **the Department of Health, will finally bring relief to many suffering patients in New York.** The DOH will grant 5 licenses to operate as registered organizations (RO) allowed to grow, extract and dispense medical marijuana.

Led by preeminent medical cannabis advocate and entrepreneur Josh Stanley, **Citiva Medical is a New York State company specializing in safe and effective products based on the latest advancements in cannabinoid medicine.** Citiva Medical's mission also includes conducting research and developing partnerships with universities, hospitals and institutions across the state to **establish New York as the global epicenter for cannabinoid research.**

ROs are not all created equal. Standardization is of the utmost importance so that patients will receive consistent and safe doses of their medication. Citiva Medical will be the industry leader based upon their stringent standardization policies and procedures. Citiva Medical has a team with **over 100 combined years of experience in clinical healthcare and the medicinal cannabis industry** and will bring safe and effective products to patients in New York.

I strongly support the New York State Department of Health granting RO status to Citiva Medical. As a responsible leader in this industry, Citiva Medical will bring safe quality medicine to patients suffering from chronic and debilitating disease and provide them with a chance at a better quality of life.

NAME	ADDRESS	PHONE/EMAIL	SIGNATURE
Theresa Rodes	[redacted]		
Kathleen Caridi			
Richard Caridi			
Gabrielle Levy			
Brittany Coren			
Andrew Villanueva			
Kristin Avery			
Hadar Tamir			
Amara Brenner			
Alyx Steinberg			

Please print, sign and mail petition back by TUESDAY, MAY 26, 2015 to:
Citiva Medical LLC
7378 Amboy Road
Staten Island, NY 10307

PETITION IN SUPPORT OF CITIVA MEDICAL

New York State has enacted a limited medical marijuana program to help treat people with certain conditions, including Cancer, HIV/AIDS, ALS, Parkinson's Disease, MS, Spinal Cord Damage, Epilepsy, Dravet Syndrome, Inflammatory Bowel Syndrome, Huntington's Disease and Neuropathy.

This program, administered through **the Department of Health, will finally bring relief to many suffering patients in New York.** The DOH will grant 5 licenses to operate as registered organizations (RO) allowed to grow, extract and dispense medical marijuana.

Led by preeminent medical cannabis advocate and entrepreneur Josh Stanley, **Citiva Medical is a New York State company specializing in safe and effective products based on the latest advancements in cannabinoid medicine.** Citiva Medical's mission also includes conducting research and developing partnerships with universities, hospitals and institutions across the state to **establish New York as the global epicenter for cannabinoid research.**

ROs are not all created equal. Standardization is of the utmost importance so that patients will receive consistent and safe doses of their medication. Citiva Medical will be the industry leader based upon their stringent standardization policies and procedures. Citiva Medical has a team with **over 100 combined years of experience in clinical healthcare and the medicinal cannabis industry** and will bring safe and effective products to patients in New York.

I strongly support the New York State Department of Health granting RO status to Citiva Medical. As a responsible leader in this industry, Citiva Medical will bring safe quality medicine to patients suffering from chronic and debilitating disease and provide them with a chance at a better quality of life.

NAME	ADDRESS	PHONE/EMAIL	SIGNATURE
[redacted]			

Please print, sign and mail petition back by TUESDAY, MAY 26, 2015 to:
Citiva Medical LLC
7378 Amboy Road
Staten Island, NY 10307

PETITION IN SUPPORT OF CITIVA MEDICAL

New York State has enacted a limited medical marijuana program to help treat people with certain conditions, including Cancer, HIV/AIDS, ALS, Parkinson's Disease, MS, Spinal Cord Damage, Epilepsy, Dravet Syndrome, Inflammatory Bowel Syndrome, Huntington's Disease and Neuropathy.

This program, administered through **the Department of Health, will finally bring relief to many suffering patients in New York.** The DOH will grant 5 licenses to operate as registered organizations (RO) allowed to grow, extract and dispense medical marijuana.

Led by preeminent medical cannabis advocate and entrepreneur Josh Stanley, **Citiva Medical is a New York State company specializing in safe and effective products based on the latest advancements in cannabinoid medicine.** Citiva Medical's mission also includes conducting research and developing partnerships with universities, hospitals and institutions across the state to **establish New York as the global epicenter for cannabinoid research.**

ROs are not all created equal. Standardization is of the utmost importance so that patients will receive consistent and safe doses of their medication. Citiva Medical will be the industry leader based upon their stringent standardization policies and procedures. Citiva Medical has a team with **over 100 combined years of experience in clinical healthcare and the medicinal cannabis industry** and will bring safe and effective products to patients in New York.

I strongly support the New York State Department of Health granting RO status to Citiva Medical. As a responsible leader in this industry, Citiva Medical will bring safe quality medicine to patients suffering from chronic and debilitating disease and provide them with a chance at a better quality of life.

NAME	ADDRESS	SIGNATURE
Mrs. Dalila Kassaci	[redacted]	

Please print, sign and mail petition back by TUESDAY, MAY 26, 2015 to:
Citiva Medical LLC
7378 Amboy Road
Staten Island, NY 10307

PETITION IN SUPPORT OF CITIVA MEDICAL

New York State has enacted a limited medical marijuana program to help treat people with certain conditions, including Cancer, HIV/AIDS, ALS, Parkinson's Disease, MS, Spinal Cord Damage, Epilepsy, Dravet Syndrome, Inflammatory Bowel Syndrome, Huntington's Disease and Neuropathy.

This program, administered through **the Department of Health, will finally bring relief to many suffering patients in New York.** The DOH will grant 5 licenses to operate as registered organizations (RO) allowed to grow, extract and dispense medical marijuana.

Led by preeminent medical cannabis advocate and entrepreneur Josh Stanley, **Citiva Medical is a New York State company specializing in safe and effective products based on the latest advancements in cannabinoid medicine.** Citiva Medical's mission also includes conducting research and developing partnerships with universities, hospitals and institutions across the state to **establish New York as the global epicenter for cannabinoid research.**

ROs are not all created equal. Standardization is of the utmost importance so that patients will receive consistent and safe doses of their medication. Citiva Medical will be the industry leader based upon their stringent standardization policies and procedures. Citiva Medical has a team with **over 100 combined years of experience in clinical healthcare and the medicinal cannabis industry** and will bring safe and effective products to patients in New York.

I strongly support the New York State Department of Health granting RO status to Citiva Medical. As a responsible leader in this industry, Citiva Medical will bring safe quality medicine to patients suffering from chronic and debilitating disease and provide them with a chance at a better quality of life.

NAME	ADDRESS	PHONE/EMAIL	SIGNATURE
Kamel Kessaci	[redacted]	[redacted]	

Please print, sign and mail petition back by TUESDAY, MAY 26, 2015 to:
Citiva Medical LLC
7378 Amboy Road
Staten Island, NY 10307

PETITION IN SUPPORT OF CITIVA MEDICAL

New York State has enacted a limited medical marijuana program to help treat people with certain conditions, including Cancer, HIV/AIDS, ALS, Parkinson's Disease, MS, Spinal Cord Damage, Epilepsy, Dravet Syndrome, Inflammatory Bowel Syndrome, Huntington's Disease and Neuropathy.

This program, administered through **the Department of Health, will finally bring relief to many suffering patients in New York.** The DOH will grant 5 licenses to operate as registered organizations (RO) allowed to grow, extract and dispense medical marijuana.

Led by preeminent medical cannabis advocate and entrepreneur Josh Stanley, **Citiva Medical is a New York State company specializing in safe and effective products based on the latest advancements in cannabinoid medicine.** Citiva Medical's mission also includes conducting research and developing partnerships with universities, hospitals and institutions across the state to **establish New York as the global epicenter for cannabinoid research.**

ROs are not all created equal. Standardization is of the utmost importance so that patients will receive consistent and safe doses of their medication. Citiva Medical will be the industry leader based upon their stringent standardization policies and procedures. Citiva Medical has a team with **over 100 combined years of experience in clinical healthcare and the medicinal cannabis industry** and will bring safe and effective products to patients in New York.

I strongly support the New York State Department of Health granting RO status to Citiva Medical. As a responsible leader in this industry, Citiva Medical will bring safe quality medicine to patients suffering from chronic and debilitating disease and provide them with a chance at a better quality of life.

NAME	ADDRESS	PHONE/EMAIL	SIGNATURE
Nancy Babbatt	[redacted]		
Christine Lombardi			
Theresa Esposito			
Christopher Ford			
Scott McGrath			
VICTOR J. SAPIENZA			
Kathleen Meraglia			
Kemba Williams			
Tatyana Samuels			

Please print, sign and mail petition back by TUESDAY, MAY 26, 2015 to:
Citiva Medical LLC
7378 Amboy Road
Staten Island, NY 10307

PETITION IN SUPPORT OF CITIVA MEDICAL

New York State has enacted a limited medical marijuana program to help treat people with certain conditions, including Cancer, HIV/AIDS, ALS, Parkinson's Disease, MS, Spinal Cord Damage, Epilepsy, Dravet Syndrome, Inflammatory Bowel Syndrome, Huntington's Disease and Neuropathy.

This program, administered through **the Department of Health, will finally bring relief to many suffering patients in New York.** The DOH will grant 5 licenses to operate as registered organizations (RO) allowed to grow, extract and dispense medical marijuana.

Led by preeminent medical cannabis advocate and entrepreneur Josh Stanley, **Citiva Medical is a New York State company specializing in safe and effective products based on the latest advancements in cannabinoid medicine.** Citiva Medical's mission also includes conducting research and developing partnerships with universities, hospitals and institutions across the state to **establish New York as the global epicenter for cannabinoid research.**

ROs are not all created equal. Standardization is of the utmost importance so that patients will receive consistent and safe doses of their medication. Citiva Medical will be the industry leader based upon their stringent standardization policies and procedures. Citiva Medical has a team with **over 100 combined years of experience in clinical healthcare and the medicinal cannabis industry** and will bring safe and effective products to patients in New York.

I strongly support the New York State Department of Health granting RO status to Citiva Medical. As a responsible leader in this industry, Citiva Medical will bring safe quality medicine to patients suffering from chronic and debilitating disease and provide them with a chance at a better quality of life.

NAME	ADDRESS	PHONE/EMAIL	SIGNATURE
Lizanne Piersa	[redacted]	[redacted]	
Judy Milloy			
Shannon Allsop			
Janet Ilardo			
Kandy Robertson			
Mallory DiBerardino			
Cynthia Maggio			
Barbara Costantino			
Thomas Keller			
Teresa Keller			
Chrystal Mook			
Jeffrey Mook			
Christina Filsteo			

Please print, sign and mail petition back by TUESDAY, MAY 26, 2015 to:
Citiva Medical LLC
7378 Amboy Road
Staten Island, NY 10307

PETITION IN SUPPORT OF CITIVA MEDICAL

New York State has enacted a limited medical marijuana program to help treat people with certain conditions, including Cancer, HIV/AIDS, ALS, Parkinson's Disease, MS, Spinal Cord Damage, Epilepsy, Dravet Syndrome, Inflammatory Bowel Syndrome, Huntington's Disease and Neuropathy.

This program, administered through **the Department of Health, will finally bring relief to many suffering patients in New York.** The DOH will grant 5 licenses to operate as registered organizations (RO) allowed to grow, extract and dispense medical marijuana.

Led by preeminent medical cannabis advocate and entrepreneur Josh Stanley, **Citiva Medical is a New York State company specializing in safe and effective products based on the latest advancements in cannabinoid medicine.** Citiva Medical's mission also includes conducting research and developing partnerships with universities, hospitals and institutions across the state to **establish New York as the global epicenter for cannabinoid research.**

ROs are not all created equal. Standardization is of the utmost importance so that patients will receive consistent and safe doses of their medication. Citiva Medical will be the industry leader based upon their stringent standardization policies and procedures. Citiva Medical has a team with **over 100 combined years of experience in clinical healthcare and the medicinal cannabis industry** and will bring safe and effective products to patients in New York.

I strongly support the New York State Department of Health granting RO status to Citiva Medical. As a responsible leader in this industry, Citiva Medical will bring safe quality medicine to patients suffering from chronic and debilitating disease and provide them with a chance at a better quality of life.

NAME	ADDRESS	PHONE/EMAIL	SIGNATURE
[redacted]	[redacted]	[redacted]	[redacted]

Please print, sign and mail petition back by TUESDAY, MAY 26, 2015 to:
Citiva Medical LLC
7378 Amboy Road
Staten Island, NY 10307

PETITION IN SUPPORT OF CITIVA MEDICAL

New York State has enacted a limited medical marijuana program to help treat people with certain conditions, including cancer, HIV/AIDS, ALS, Parkinson's Disease, MS, Spinal Cord Damage, Epilepsy, Dravet Syndrome, Inflammatory Bowel Syndrome, Huntington's Disease and Neuropathy.

This program, administered through **the Department of Health, will finally bring relief to many suffering patients in New York.** The DOH will grant 5 companies licenses to operate as registered organizations (RO) allowed to grow, extract and dispense medical marijuana.

Led by preeminent medical cannabis advocate and entrepreneur Josh Stanley, **Citiva Medical is a New York State company specializing in safe and effective products based on the latest advancements in cannabinoid medicine.** Citiva Medical's mission also includes conducting research and developing partnerships with universities, hospitals and institutions across the state to **establish New York as the global epicenter for cannabinoid research.**

ROs are not all created equal. Standardization is of the utmost importance so that patients will receive consistent and safe doses of their medication. Citiva Medical will be the industry leader based upon their stringent standardization policies and procedures. Citiva Medical has a team with **over 100 combined years of experience in clinical healthcare and the medicinal cannabis industry** and will bring safe and effective products to patients in New York.

I strongly support the New York State Department of Health granting RO status to Citiva Medical. As a responsible leader in this industry, Citiva Medical will bring safe quality medicine to patients suffering from chronic and debilitating disease and provide them with a chance at a better quality of life.

NAME	ADDRESS	PHONE/EMAIL	SIGNATURE
Marie Watts	[redacted]	[redacted]	Marie Watts
Courtney Mavro			
Gina Monsa			
Michael O'Shea			
Norman Bachtler			
Linda Bluemle			
Lucrecia Donnelly			
Jacqueline Malone			
James M Gall			
Carol Lacina			

PETITION IN SUPPORT OF CITIVA MEDICAL

New York State has enacted a limited medical marijuana program to help treat people with certain conditions, including Cancer, HIV/AIDS, ALS, Parkinson's Disease, MS, Spinal Cord Damage, Epilepsy, Dravet Syndrome, Inflammatory Bowel ndrome, Huntington's Disease and Neuropathy.

This program, administered through **the Department of Health, will finally bring relief to many suffering patients in New York.** The DOH will grant 5 licenses to operate as registered organizations (RO) allowed to grow, extract and dispense medical marijuana.

Led by preeminent medical cannabis advocate and entrepreneur Josh Stanley, **Citiva Medical is a New York State company specializing in safe and effective products based on the latest advancements in cannabinoid medicine.** Citiva Medical's mission also includes conducting research and developing partnerships with universities, hospitals and institutions across the state to **establish New York as the global epicenter for cannabinoid research.**

ROs are not all created equal. Standardization is of the utmost importance so that patients will receive consistent and safe doses of their medication. Citiva Medical will be the industry leader based upon their stringent standardization policies and procedures. Citiva Medical has a team with **over 100 combined years of experience in clinical healthcare and the medicinal cannabis industry** and will bring safe and effective products to patients in New York.

I strongly support the New York State Department of Health granting RO status to Citiva Medical. As a responsible leader in this industry, Citiva Medical will bring safe quality medicine to patients suffering from chronic and debilitating disease and provide them with a chance at a better quality of life.

NAME	ADDRESS	PHONE/EMAIL	SIGNATURE
Lisa Ann McNutt	[redacted]		
Christine Santoro			
Sharon Suhr			
Janine Lebrio			
Eileen Aragona			
Scott McNutt			
Georgia Panagotopoulos			

Please print, sign and mail petition back by TUESDAY, MAY 26, 2015 to:
Citiva Medical LLC
7378 Amboy Road
Staten Island, NY 10307

PETITION IN SUPPORT OF CITIVA MEDICAL

New York State has enacted a limited medical marijuana program to help treat people with certain conditions, including Cancer, HIV/AIDS, ALS, Parkinson's Disease, MS, Spinal Cord Damage, Epilepsy, Dravet Syndrome, Inflammatory Bowel ndrome, Huntington's Disease and Neuropathy.

This program, administered through **the Department of Health, will finally bring relief to many suffering patients in New York.** The DOH will grant 5 licenses to operate as registered organizations (RO) allowed to grow, extract and dispense medical marijuana.

Led by preeminent medical cannabis advocate and entrepreneur Josh Stanley, **Citiva Medical is a New York State company specializing in safe and effective products based on the latest advancements in cannabinoid medicine.** Citiva Medical's mission also includes conducting research and developing partnerships with universities, hospitals and institutions across the state to **establish New York as the global epicenter for cannabinoid research.**

ROs are not all created equal. Standardization is of the utmost importance so that patients will receive consistent and safe doses of their medication. Citiva Medical will be the industry leader based upon their stringent standardization policies and procedures. Citiva Medical has a team with **over 100 combined years of experience in clinical healthcare and the medicinal cannabis industry** and will bring safe and effective products to patients in New York.

I strongly support the New York State Department of Health granting RO status to Citiva Medical. As a responsible leader in this industry, Citiva Medical will bring safe quality medicine to patients suffering from chronic and debilitating disease and provide them with a chance at a better quality of life.

NAME	ADDRESS	PHONE/EMAIL [redacted]	SIGNATURE
Donald Daugherty	[redacted]	[redacted]	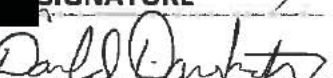
MUNAAF HUSSAIN			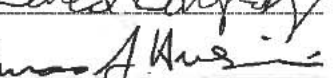
JOSEPH FAUGNO			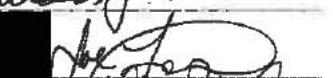
William Kelly			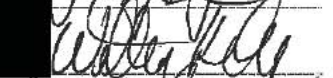
WADE SMITH			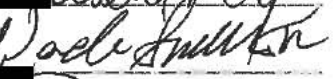
Jen Harvey			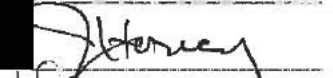
Joshua Kurtz			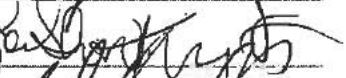
Richard Bonilla			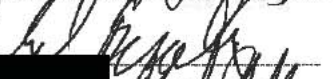
NEIL SARDELLA			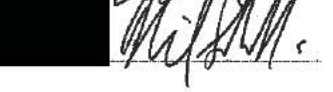

Please print, sign and mail petition back by TUESDAY, MAY 26, 2015 to:
Citiva Medical LLC
7378 Amboy Road
Staten Island, NY 10307

PETITION IN SUPPORT OF CITIVA MEDICAL

New York State has enacted a limited medical marijuana program to help treat people with certain conditions, including Cancer, HIV/AIDS, ALS, Parkinson's Disease, MS, Spinal Cord Damage, Epilepsy, Dravet Syndrome, Inflammatory Bowel Syndrome, Huntington's Disease and Neuropathy.

This program, administered through **the Department of Health, will finally bring relief to many suffering patients in New York.** The DOH will grant 5 licenses to operate as registered organizations (RO) allowed to grow, extract and dispense medical marijuana.

Led by preeminent medical cannabis advocate and entrepreneur Josh Stanley, **Citiva Medical is a New York State company specializing in safe and effective products based on the latest advancements in cannabinoid medicine.** Citiva Medical's mission also includes conducting research and developing partnerships with universities, hospitals and institutions across the state to **establish New York as the global epicenter for cannabinoid research.**

ROs are not all created equal. Standardization is of the utmost importance so that patients will receive consistent and safe doses of their medication. Citiva Medical will be the industry leader based upon their stringent standardization policies and procedures. Citiva Medical has a team with **over 100 combined years of experience in clinical healthcare and the medicinal cannabis industry** and will bring safe and effective products to patients in New York.

I strongly support the New York State Department of Health granting RO status to Citiva Medical. As a responsible leader in this industry, Citiva Medical will bring safe quality medicine to patients suffering from chronic and debilitating disease and provide them with a chance at a better quality of life.

NAME	ADDRESS	PHONE/EMAIL	SIGNATURE
[illegible]	[redacted]		[illegible]
	[redacted]		

Please print, sign and mail petition back by TUESDAY, MAY 26, 2015 to:
Citiva Medical LLC
7378 Amboy Road
Staten Island, NY 10307

PETITION IN SUPPORT OF CITIVA MEDICAL

New York State has enacted a limited medical marijuana program to help treat people with certain conditions, including Cancer, HIV/AIDS, ALS, Parkinson's Disease, MS, Spinal Cord Damage, Epilepsy, Dravet Syndrome, Inflammatory Bowel Syndrome, Huntington's Disease and Neuropathy.

This program, administered through the Department of Health, will finally bring relief to many suffering patients in New York. The DOH will grant 5 licenses to operate as registered organizations (RO) allowed to grow, extract and dispense medical marijuana.

Led by preeminent medical cannabis advocate and entrepreneur Josh Stanley, Citiva Medical is a New York State company specializing in safe and effective products based on the latest advancements in cannabinoid medicine. Citiva Medical's mission also includes conducting research and developing partnerships with universities, hospitals and institutions across the state to establish New York as the global epicenter for cannabinoid research.

ROs are not all created equal. Standardization is of the utmost importance so that patients will receive consistent and safe doses of their medication. Citiva Medical will be the industry leader based upon their stringent standardization policies and procedures. Citiva Medical has a team with over 100 combined years of experience in clinical healthcare and the medicinal cannabis industry and will bring safe and effective products to patients in New York.

I strongly support the New York State Department of Health granting RO status to Citiva Medical. As a responsible leader in this industry, Citiva Medical will bring safe quality medicine to patients suffering from chronic and debilitating disease and provide them with a chance at a better quality of life.

NAME	ADDRESS	PHONE/EMAIL	SIGNATURE
LAWRENCE SCOTT	[redacted]		
Joel Sutton			
Joe DeStefano			
Vincent Casale			
Antonia Velez			
Carol Cabrera			

Please print, sign and mail petition back by TUESDAY, MAY 26, 2015 to:
Citiva Medical LLC
7378 Amboy Road
Staten Island, NY 10307

New York State has enacted a limited medical marijuana program to help treat people with certain conditions, including Cancer, HIV/AIDS, ALS, Parkinson's Disease, MS, Spinal Cord Damage, Epilepsy, Dravet Syndrome, Inflammatory Bowel Syndrome, Huntington's Disease and Neuropathy.

This program, administered through **the Department of Health, will finally bring relief to many suffering patients in New York.** The DOH will grant 5 licenses to operate as registered organizations (RO) allowed to grow, extract and dispense medical marijuana.

Led by preeminent medical cannabis advocate and entrepreneur Josh Stanley, **Citiva Medical is a New York State company specializing in safe and effective products based on the latest advancements in cannabinoid medicine.** Citiva Medical's mission also includes conducting research and developing partnerships with universities, hospitals and institutions across the state to **establish New York as the global epicenter for cannabinoid research.**

ROs are not all created equal. Standardization is of the utmost importance so that patients will receive consistent and safe doses of their medication. Citiva Medical will be the industry leader based upon their stringent standardization policies and procedures. Citiva Medical has a team with **over 100 combined years of experience in clinical healthcare and the medicinal cannabis industry** and will bring safe and effective products to patients in New York.

I strongly support the New York State Department of Health granting RO status to Citiva Medical. As a responsible leader in this industry, Citiva Medical will bring safe quality medicine to patients suffering from chronic and debilitating disease and provide them with a chance at a better quality of life.

NAME	ADDRESS	PHONE/EMAIL	SIGNATURE
Charles T. Ognibene	[redacted]	[redacted]	Charles T. Ognibene
Susan M. Ognibene			Susan M. Ognibene
FRANK Militello			Frank Militello
LINDA Militello			Linda Militello
JoAnn Zaccagnino			Josephine Zaccagnino

Please print, sign and mail petition back by TUESDAY, MAY 26, 2015 to:
Citiva Medical LLC
7378 Amboy Road
Staten Island, NY 10307

Petition in Support of Citiva Medical

New York State has enacted a limited medical marijuana program to help treat people with certain conditions, including Cancer, HIV/AIDS, ALS, Parkinson's Disease, MS, Spinal Cord Damage, Epilepsy, Dravet Syndrome, Inflammatory Bowel ndrome, Huntington's Disease and Neuropathy.

This program, administered through **the Department of Health, will finally bring relief to many suffering patients in New York.** The DOH will grant 5 licenses to operate as registered organizations (RO) allowed to grow, extract and dispense medical marijuana.

Led by preeminent medical cannabis advocate and entrepreneur Josh Stanley, **Citiva Medical is a New York State company specializing in safe and effective products based on the latest advancements in cannabinoid medicine.** Citiva Medical's mission also includes conducting research and developing partnerships with universities, hospitals and institutions across the state to **establish New York as the global epicenter for cannabinoid research.**

ROs are not all created equal. Standardization is of the utmost importance so that patients will receive consistent and safe doses of their medication. Citiva Medical will be the industry leader based upon their stringent standardization policies and procedures. Citiva Medical has a team with **over 100 combined years of experience in clinical healthcare and the medicinal cannabis industry** and will bring safe and effective products to patients in New York.

I strongly support the New York State Department of Health granting RO status to Citiva Medical. As a responsible leader in this industry, Citiva Medical will bring safe quality medicine to patients suffering from chronic and debilitating disease and provide them with a chance at a better quality of life.

NAME	ADDRESS	PHONE/EMAIL	SIGNATURE
Daray Giberson	[redacted]		Daray Giberson
David Howath			David Howath
Luanna Howath			Luanna Howath

Please print, sign and mail petition back by TUESDAY, MAY 26, 2015 to:
Citiva Medical LLC
7378 Amboy Road
Staten Island, NY 10307

PETITION IN SUPPORT OF CITIVA MEDICAL

New York State has enacted a limited medical marijuana program to help treat people with certain conditions, including Cancer, HIV/AIDS, ALS, Parkinson's Disease, MS, Spinal Cord Damage, Epilepsy, Dravet Syndrome, Inflammatory Bowel drome, Huntington's Disease and Neuropathy.

This program, administered through **the Department of Health, will finally bring relief to many suffering patients in New York.** The DOH will grant 5 licenses to operate as registered organizations (RO) allowed to grow, extract and dispense medical marijuana.

Led by preeminent medical cannabis advocate and entrepreneur Josh Stanley, **Citiva Medical is a New York State company specializing in safe and effective products based on the latest advancements in cannabinoid medicine.** Citiva Medical's mission also includes conducting research and developing partnerships with universities, hospitals and institutions across the state to **establish New York as the global epicenter for cannabinoid research.**

ROs are not all created equal. Standardization is of the utmost importance so that patients will receive consistent and safe doses of their medication. Citiva Medical will be the industry leader based upon their stringent standardization policies and procedures. Citiva Medical has a team with **over 100 combined years of experience in clinical healthcare and the medicinal cannabis industry** and will bring safe and effective products to patients in New York.

I strongly support the New York State Department of Health granting RO status to Citiva Medical. As a responsible leader in this industry, Citiva Medical will bring safe quality medicine to patients suffering from chronic and debilitating disease and provide them with a chance at a better quality of life.

NAME	ADDRESS	PHONE/EMAIL	SIGNATURE
Lucy Armitage	[redacted]		Lucy Armitage
SHARON MIRONE	[redacted]		Sharon Mirone
M. Jo Sanford-Hartzog	[redacted]		M. Jo Sanford-Hartzog
Ambes Zona	[redacted]		

Please print, sign and mail petition back by TUESDAY, MAY 26, 2015 to:
Citiva Medical LLC
7378 Amboy Road
Staten Island, NY 10307

PETITION IN SUPPORT OF CITIVA MEDICAL

New York State has enacted a limited medical marijuana program to help treat people with certain conditions, including Cancer, HIV/AIDS, ALS, Parkinson's Disease, MS, Spinal Cord Damage, Epilepsy, Dravet Syndrome, Inflammatory Bowel ıdrome, Huntington's Disease and Neuropathy.

This program, administered through **the Department of Health, will finally bring relief to many suffering patients in New York.** The DOH will grant 5 licenses to operate as registered organizations (RO) allowed to grow, extract and dispense medical marijuana.

Led by preeminent medical cannabis advocate and entrepreneur Josh Stanley, **Citiva Medical is a New York State company specializing in safe and effective products based on the latest advancements in cannabinoid medicine.** Citiva Medical's mission also includes conducting research and developing partnerships with universities, hospitals and institutions across the state to **establish New York as the global epicenter for cannabinoid research.**

ROs are not all created equal. Standardization is of the utmost importance so that patients will receive consistent and safe doses of their medication. Citiva Medical will be the industry leader based upon their stringent standardization policies and procedures. Citiva Medical has a team with **over 100 combined years of experience in clinical healthcare and the medicinal cannabis industry** and will bring safe and effective products to patients in New York.

I strongly support the New York State Department of Health granting RO status to Citiva Medical. As a responsible leader in this industry, Citiva Medical will bring safe quality medicine to patients suffering from chronic and debilitating disease and provide them with a chance at a better quality of life.

NAME	ADDRESS	PHONE/EMAIL	SIGNATURE
Gina Hausma	[redacted]		Gina Hausma
JOSEPHINE Bu			Josephine Bus
Margery Mussell			Margery A Mussell
Jen Wieser			
Pam Wieser			Pam Wieser
Tom Mussell			
Jessica N. Musse			
John Wieser			

Please print, sign and mail petition back by TUESDAY, MAY 26, 2015 to:
Citiva Medical LLC
7378 Amboy Road
Staten Island, NY 10307

PETITION IN SUPPORT OF CITIVA MEDICAL

New York State has enacted a limited medical marijuana program to help treat people with certain conditions, including Cancer, HIV/AIDS, ALS, Parkinson's Disease, MS, Spinal Cord Damage, Epilepsy, Dravet Syndrome, Inflammatory Bowel drome, Huntington's Disease and Neuropathy.

This program, administered through **the Department of Health, will finally bring relief to many suffering patients in New York.** The DOH will grant 5 licenses to operate as registered organizations (RO) allowed to grow, extract and dispense medical marijuana.

Led by preeminent medical cannabis advocate and entrepreneur Josh Stanley, **Citiva Medical is a New York State company specializing in safe and effective products based on the latest advancements in cannabinoid medicine.** Citiva Medical's mission also includes conducting research and developing partnerships with universities, hospitals and institutions across the state to **establish New York as the global epicenter for cannabinoid research.**

ROs are not all created equal. Standardization is of the utmost importance so that patients will receive consistent and safe doses of their medication. Citiva Medical will be the industry leader based upon their stringent standardization policies and procedures. Citiva Medical has a team with **over 100 combined years of experience in clinical healthcare and the medicinal cannabis industry** and will bring safe and effective products to patients in New York.

I strongly support the New York State Department of Health granting RO status to Citiva Medical. As a responsible leader in this industry, Citiva Medical will bring safe quality medicine to patients suffering from chronic and debilitating disease and provide them with a chance at a better quality of life.

NAME	ADDRESS	PHONE/EMAIL	SIGNATURE
Donna Ippolito	[redacted]		Donna Ippolito
ivyka Velez			Dyka Velez
Susan Cichocki			Susan Cichocki
Kim Gonzales			Kim Gonzales

Please print, sign and mail petition back by TUESDAY, MAY 26, 2015 to:
Citiva Medical LLC
7378 Amboy Road
Staten Island, NY 10307

PETITION IN SUPPORT OF CITIVA MEDICAL

New York State has enacted a limited medical marijuana program to help treat people with certain conditions, including cancer, HIV/AIDS, ALS, Parkinson's Disease, MS, Spinal Cord Damage, Epilepsy, Dravet Syndrome, Inflammatory Bowel Syndrome, Huntington's Disease and Neuropathy.

This program, administered through **the Department of Health, will finally bring relief to many suffering patients in New York.** The DOH will grant 5 licenses to operate as registered organizations (RO) allowed to grow, extract and dispense medical marijuana.

Led by preeminent medical cannabis advocate and entrepreneur Josh Stanley, **Citiva Medical is a New York State company specializing in safe and effective products based on the latest advancements in cannabinoid medicine.** Citiva Medical's mission also includes conducting research and developing partnerships with universities, hospitals and institutions across the state to **establish New York as the global epicenter for cannabinoid research.**

ROs are not all created equal. Standardization is of the utmost importance so that patients will receive consistent and safe doses of their medication. Citiva Medical will be the industry leader based upon their stringent standardization policies and procedures. Citiva Medical has a team with **over 100 combined years of experience in clinical healthcare and the medicinal cannabis industry** and will bring safe and effective products to patients in New York.

I strongly support the New York State Department of Health granting RO status to Citiva Medical. As a responsible leader in this industry, Citiva Medical will bring safe quality medicine to patients suffering from chronic and debilitating disease and provide them with a chance at a better quality of life.

NAME	ADDRESS	PHONE/EMAIL	SIGNATURE
Joan Palmeri	[redacted]	[redacted]	Joan Palmeri
Maria Ninga [illegible]			
Cindy Minkie			Cindy Minkie
SUE FREEMAN			Sue Freeman
Donna Kerr			Donna Kerr

Please print, sign and mail petition back by TUESDAY, MAY 26, 2015 to:

Citiva Medical LLC
7378 Amboy Road
Staten Island, NY 10307

PETITION IN SUPPORT OF CITIVA MEDICAL

New York State has enacted a limited medical marijuana program to help treat people with certain conditions, including Cancer, HIV/AIDS, ALS, Parkinson's Disease, MS, Spinal Cord Damage, Epilepsy, Dravet Syndrome, Inflammatory Bowel Syndrome, Huntington's Disease and Neuropathy.

This program, administered through **the Department of Health, will finally bring relief to many suffering patients in New York.** The DOH will grant 5 licenses to operate as registered organizations (RO) allowed to grow, extract and dispense medical marijuana.

Led by preeminent medical cannabis advocate and entrepreneur Josh Stanley, **Citiva Medical is a New York State company specializing in safe and effective products based on the latest advancements in cannabinoid medicine.** Citiva Medical's mission also includes conducting research and developing partnerships with universities, hospitals and institutions across the state to **establish New York as the global epicenter for cannabinoid research.**

ROs are not all created equal. Standardization is of the utmost importance so that patients will receive consistent and safe doses of their medication. Citiva Medical will be the industry leader based upon their stringent standardization policies and procedures. Citiva Medical has a team with **over 100 combined years of experience in clinical healthcare and the medicinal cannabis industry** and will bring safe and effective products to patients in New York.

I strongly support the New York State Department of Health granting RO status to Citiva Medical. As a responsible leader in this industry, Citiva Medical will bring safe quality medicine to patients suffering from chronic and debilitating disease and provide them with a chance at a better quality of life.

NAME	ADDRESS	PHONE/EMAIL	SIGNATURE
DONALD HIBBS	[redacted]		
Dorothy Hibbs			

Please print, sign and mail petition back by TUESDAY, MAY 26, 2015 to:
Citiva Medical LLC
7378 Amboy Road
Staten Island, NY 10307

PETITION IN SUPPORT OF CITIVA MEDICAL

New York State has enacted a limited medical marijuana program to help treat people with certain conditions, including Cancer, HIV/AIDS, ALS, Parkinson's Disease, MS, Spinal Cord Damage, Epilepsy, Dravet Syndrome, Inflammatory Bowel ıdrome, Huntington's Disease and Neuropathy.

This program, administered through **the Department of Health, will finally bring relief to many suffering patients in New York.** The DOH will grant 5 licenses to operate as registered organizations (RO) allowed to grow, extract and dispense medical marijuana.

Led by preeminent medical cannabis advocate and entrepreneur Josh Stanley, **Citiva Medical is a New York State company specializing in safe and effective products based on the latest advancements in cannabinoid medicine.** Citiva Medical's mission also includes conducting research and developing partnerships with universities, hospitals and institutions across the state to **establish New York as the global epicenter for cannabinoid research.**

ROs are not all created equal. Standardization is of the utmost importance so that patients will receive consistent and safe doses of their medication. Citiva Medical will be the industry leader based upon their stringent standardization policies and procedures. Citiva Medical has a team with **over 100 combined years of experience in clinical healthcare and the medicinal cannabis industry** and will bring safe and effective products to patients in New York.

I strongly support the New York State Department of Health granting RO status to Citiva Medical. As a responsible leader in this industry, Citiva Medical will bring safe quality medicine to patients suffering from chronic and debilitating disease and provide them with a chance at a better quality of life.

NAME	ADDRESS	PHONE/EMAIL	SIGNATURE
Wendy Rice	[redacted]	[redacted]	Wendy Rice
Marissa Rimes			
Dianne Serio			
Yolanda Williams			
Renee Bunk			
Coleen Mauluccl			Coleen Mauluccl

Please print, sign and mail petition back by TUESDAY, MAY 26, 2015 to:
Citiva Medical LLC
7378 Amboy Road
Staten Island, NY 10307

PETITION IN SUPPORT OF CITIVA MEDICAL

New York State has enacted a limited medical marijuana program to help treat people with certain conditions, including Cancer, HIV/AIDS, ALS, Parkinson's Disease, MS, Spinal Cord Damage, Epilepsy, Dravet Syndrome, Inflammatory Bowel drome, Huntington's Disease and Neuropathy.

This program, administered through **the Department of Health, will finally bring relief to many suffering patients in New York.** The DOH will grant 5 licenses to operate as registered organizations (RO) allowed to grow, extract and dispense medical marijuana.

Led by preeminent medical cannabis advocate and entrepreneur Josh Stanley, **Citiva Medical is a New York State company specializing in safe and effective products based on the latest advancements in cannabinoid medicine.** Citiva Medical's mission also includes conducting research and developing partnerships with universities, hospitals and institutions across the state to **establish New York as the global epicenter for cannabinoid research.**

ROs are not all created equal. Standardization is of the utmost importance so that patients will receive consistent and safe doses of their medication. Citiva Medical will be the industry leader based upon their stringent standardization policies and procedures. Citiva Medical has a team with **over 100 combined years of experience in clinical healthcare and the medicinal cannabis industry** and will bring safe and effective products to patients in New York.

I strongly support the New York State Department of Health granting RO status to Citiva Medical. As a responsible leader in this industry, Citiva Medical will bring safe quality medicine to patients suffering from chronic and debilitating disease and provide them with a chance at a better quality of life.

NAME	ADDRESS	PHONE/EMAIL	SIGNATURE
Sandra Ryan	[redacted]	[redacted]	Sandra Ryan
Carrie Ryan			Carrie Ryan
Melissa Schwab			Melissa Schwab
Beverly Jasinski			Beverly Jasinski
Melissa Klas			Melissa Klas

Please print, sign and mail petition back by TUESDAY, MAY 26, 2015 to:
Citiva Medical LLC
7378 Amboy Road
Staten Island, NY 10307

PETITION IN SUPPORT OF CITIVA MEDICAL

New York State has enacted a limited medical marijuana program to help treat people with certain conditions, including Cancer, HIV/AIDS, ALS, Parkinson's Disease, MS, Spinal Cord Damage, Epilepsy, Dravet Syndrome, Inflammatory Bowel ıdrome, Huntington's Disease and Neuropathy.

This program, administered through **the Department of Health, will finally bring relief to many suffering patients in New York.** The DOH will grant 5 licenses to operate as registered organizations (RO) allowed to grow, extract and dispense medical marijuana.

Led by preeminent medical cannabis advocate and entrepreneur Josh Stanley, **Citiva Medical is a New York State company specializing in safe and effective products based on the latest advancements in cannabinoid medicine.** Citiva Medical's mission also includes conducting research and developing partnerships with universities, hospitals and institutions across the state to **establish New York as the global epicenter for cannabinoid research.**

ROs are not all created equal. Standardization is of the utmost importance so that patients will receive consistent and safe doses of their medication. Citiva Medical will be the industry leader based upon their stringent standardization policies and procedures. Citiva Medical has a team with **over 100 combined years of experience in clinical healthcare and the medicinal cannabis industry** and will bring safe and effective products to patients in New York.

I strongly support the New York State Department of Health granting RO status to Citiva Medical. As a responsible leader in this industry, Citiva Medical will bring safe quality medicine to patients suffering from chronic and debilitating disease and provide them with a chance at a better quality of life.

NAME	ADDRESS	PHONE/EMAIL	SIGNATURE
Misty Scharf	[redacted]		Misty Scharf
Debra L. Barrile			Debra L Barrile
Dale L. O'Took			Dale L. O'Took
Rosanne Sheehan			Rosanne Sheehan
Natalie Hurtt			Natalie D Hurtt
Darlene O'Keeffe			Darlene O'Keeffe
Katy Porter			Katy Porter

Please print, sign and mail petition back by TUESDAY, MAY 26, 2015 to:
Citiva Medical LLC
7378 Amboy Road
Staten Island, NY 10307

PETITION IN SUPPORT OF CITIVA MEDICAL

New York State has enacted a limited medical marijuana program to help treat people with certain conditions, including Cancer, HIV/AIDS, ALS, Parkinson's Disease, MS, Spinal Cord Damage, Epilepsy, Dravet Syndrome, Inflammatory Bowel Syndrome, Huntington's Disease and Neuropathy.

This program, administered through **the Department of Health, will finally bring relief to many suffering patients in New York.** The DOH will grant 5 licenses to operate as registered organizations (RO) allowed to grow, extract and dispense medical marijuana.

Led by preeminent medical cannabis advocate and entrepreneur Josh Stanley, **Citiva Medical is a New York State company specializing in safe and effective products based on the latest advancements in cannabinoid medicine.** Citiva Medical's mission also includes conducting research and developing partnerships with universities, hospitals and institutions across the state to **establish New York as the global epicenter for cannabinoid research.**

ROs are not all created equal. Standardization is of the utmost importance so that patients will receive consistent and safe doses of their medication. Citiva Medical will be the industry leader based upon their stringent standardization policies and procedures. Citiva Medical has a team with **over 100 combined years of experience in clinical healthcare and the medicinal cannabis industry** and will bring safe and effective products to patients in New York.

I strongly support the New York State Department of Health granting RO status to Citiva Medical. As a responsible leader in this industry, Citiva Medical will bring safe quality medicine to patients suffering from chronic and debilitating disease and provide them with a chance at a better quality of life.

NAME	ADDRESS	PHONE/EMAIL	SIGNATURE
Sarah Maciejewski	[redacted]	[redacted]	S Maciejewski
Mary L. Galletta			Mary L Galletta
Helene Raichilson			Helene Raichilson
Patricia Haak			Patricia Haak
Peter Hingston			Peter Hingston

Please print, sign and mail petition back by TUESDAY, MAY 26, 2015 to:
Citiva Medical LLC
7378 Amboy Road
Staten Island, NY 10307

PETITION IN SUPPORT OF CITIVA MEDICAL

New York State has enacted a limited medical marijuana program to help treat people with certain conditions, including Cancer, HIV/AIDS, ALS, Parkinson's Disease, MS, Spinal Cord Damage, Epilepsy, Dravet Syndrome, Inflammatory Bowel ndrome, Huntington's Disease and Neuropathy.

This program, administered through **the Department of Health, will finally bring relief to many suffering patients in New York.** The DOH will grant 5 licenses to operate as registered organizations (RO) allowed to grow, extract and dispense medical marijuana.

Led by preeminent medical cannabis advocate and entrepreneur Josh Stanley, **Citiva Medical is a New York State company specializing in safe and effective products based on the latest advancements in cannabinoid medicine.** Citiva Medical's mission also includes conducting research and developing partnerships with universities, hospitals and institutions across the state to **establish New York as the global epicenter for cannabinoid research.**

ROs are not all created equal. Standardization is of the utmost importance so that patients will receive consistent and safe doses of their medication. Citiva Medical will be the industry leader based upon their stringent standardization policies and procedures. Citiva Medical has a team with **over 100 combined years of experience in clinical healthcare and the medicinal cannabis industry** and will bring safe and effective products to patients in New York.

I strongly support the New York State Department of Health granting RO status to Citiva Medical. As a responsible leader in this industry, Citiva Medical will bring safe quality medicine to patients suffering from chronic and debilitating disease and provide them with a chance at a better quality of life.

NAME	ADDRESS	PHONE/EMAIL	SIGNATURE
Deborah Boyer	[redacted]		
Steve Nolan			
Chelsey Peterson			
Terry Wiedemann			
VALERIE ABBOTT			
DENNIS BUTINSKI			
Sharon Orcutt			
Lorne Faulkner			
JON BEIGHT			
LINDA SCHMIDT			
Isabel Bray			
Larissa Pennington			
Michael Simons			

Please print, sign and mail petition back by TUESDAY, MAY 26, 2015 to:
Citiva Medical LLC
7378 Amboy Road
Staten Island, NY 10307

PETITION IN SUPPORT OF CITIVA MEDICAL

New York State has enacted a limited medical marijuana program to help treat people with certain conditions, including Cancer, HIV/AIDS, ALS, Parkinson's Disease, MS, Spinal Cord Damage, Epilepsy, Dravet Syndrome, Inflammatory Bowel ndrome, Huntington's Disease and Neuropathy.

This program, administered through **the Department of Health, will finally bring relief to many suffering patients in New York.** The DOH will grant 5 licenses to operate as registered organizations (RO) allowed to grow, extract and dispense medical marijuana.

Led by preeminent medical cannabis advocate and entrepreneur Josh Stanley, **Citiva Medical is a New York State company specializing in safe and effective products based on the latest advancements in cannabinoid medicine.** Citiva Medical's mission also includes conducting research and developing partnerships with universities, hospitals and institutions across the state to **establish New York as the global epicenter for cannabinoid research.**

ROs are not all created equal. Standardization is of the utmost importance so that patients will receive consistent and safe doses of their medication. Citiva Medical will be the industry leader based upon their stringent standardization policies and procedures. Citiva Medical has a team with **over 100 combined years of experience in clinical healthcare and the medicinal cannabis industry** and will bring safe and effective products to patients in New York.

I strongly support the New York State Department of Health granting RO status to Citiva Medical. As a responsible leader in this industry, Citiva Medical will bring safe quality medicine to patients suffering from chronic and debilitating disease and provide them with a chance at a better quality of life.

NAME	ADDRESS	PHONE/EMAIL	SIGNATURE
Tara Henzel	[redacted]	[redacted]	Tara Henzel
Kevin Henzel			Kevin Henzel
Larry Barnes			Larry Barnes
Jerry Blum			Jerry Blum
Richard L Blowvet Jr			Richard L Blowvet Jr
Tina Blowvet			Tina Blowvet
Richard Haimuth			Richard Haimuth
Theresa Weitzel			Theresa Weitzel
Magda D. Cividanes			Magda D. Cividanes
Robin Merlitt			Robin Merlitt
Debra Wilday			Debra Wilday
Jeff Wilday			Jeff Wilday
Jamie Sander			Jamie Sander

Please print, sign and mail petition back by TUESDAY, MAY 26, 2015 to:
Citiva Medical LLC
7378 Amboy Road
Staten Island, NY 10307

PETITION IN SUPPORT OF CITIVA MEDICAL

New York State has enacted a limited medical marijuana program to help treat people with certain conditions, including Cancer, HIV/AIDS, ALS, Parkinson's Disease, MS, Spinal Cord Damage, Epilepsy, Dravet Syndrome, Inflammatory Bowel Syndrome, Huntington's Disease and Neuropathy.

This program, administered through **the Department of Health, will finally bring relief to many suffering patients in New York.** The DOH will grant 5 licenses to operate as registered organizations (RO) allowed to grow, extract and dispense medical marijuana.

Led by preeminent medical cannabis advocate and entrepreneur Josh Stanley, **Citiva Medical is a New York State company specializing in safe and effective products based on the latest advancements in cannabinoid medicine.** Citiva Medical's mission also includes conducting research and developing partnerships with universities, hospitals and institutions across the state to **establish New York as the global epicenter for cannabinoid research.**

ROs are not all created equal. Standardization is of the utmost importance so that patients will receive consistent and safe doses of their medication. Citiva Medical will be the industry leader based upon their stringent standardization policies and procedures. Citiva Medical has a team with **over 100 combined years of experience in clinical healthcare and the medicinal cannabis industry** and will bring safe and effective products to patients in New York.

I strongly support the New York State Department of Health granting RO status to Citiva Medical. As a responsible leader in this industry, Citiva Medical will bring safe quality medicine to patients suffering from chronic and debilitating disease and provide them with a chance at a better quality of life.

NAME	ADDRESS	PHONE/EMAIL	SIGNATURE
Donna MacMillan	[redacted]		X Donna MacMillan
DONNA LaSorsa			X Donna LaSorsa
Krystal Perryman			X Krystal Perryman
Michael PATE			X Michael Pate
Pamela Salem			X Pamela Salem
Guy S Castellano			X Guy S Castellano
James Marshall			X James Marshall
CRAIG Jacobs			X Craig Jacobs
Vickie Jacobs			X Vickie Jacobs
Mara Hennessey			X Mara Hennessey

Please print, sign and mail petition back by TUESDAY, MAY 26, 2015 to:
Citiva Medical LLC
7378 Amboy Road
Staten Island, NY 10307

PETITION IN SUPPORT OF CITIVA MEDICAL

New York State has enacted a limited medical marijuana program to help treat people with certain conditions, including Cancer, HIV/AIDS, ALS, Parkinson's Disease, MS, Spinal Cord Damage, Epilepsy, Dravet Syndrome, Inflammatory Bowel ndrome, Huntington's Disease and Neuropathy.

This program, administered through **the Department of Health, will finally bring relief to many suffering patients in New York.** The DOH will grant 5 licenses to operate as registered organizations (RO) allowed to grow, extract and dispense medical marijuana.

Led by preeminent medical cannabis advocate and entrepreneur Josh Stanley, **Citiva Medical is a New York State company specializing in safe and effective products based on the latest advancements in cannabinoid medicine.** Citiva Medical's mission also includes conducting research and developing partnerships with universities, hospitals and institutions across the state to **establish New York as the global epicenter for cannabinoid research.**

ROs are not all created equal. Standardization is of the utmost importance so that patients will receive consistent and safe doses of their medication. Citiva Medical will be the industry leader based upon their stringent standardization policies and procedures. Citiva Medical has a team with **over 100 combined years of experience in clinical healthcare and the medicinal cannabis industry** and will bring safe and effective products to patients in New York.

I strongly support the New York State Department of Health granting RO status to Citiva Medical. As a responsible leader in this industry, Citiva Medical will bring safe quality medicine to patients suffering from chronic and debilitating disease and provide them with a chance at a better quality of life.

NAME	ADDRESS	PHONE/EMAIL	SIGNATURE
Tara Henzel	[redacted]		Tara Henzel
Kevin Henzel			Kevin Henzel
Larry Barnes			Larry Barnes
Jerry Blum			Jerry Blum
Richard L Blowet Jr			Richard L Blowet Jr
Tina Blowet			Tina Blowet
Richard Haimuth			Richard Haimuth
Theresa Weitzel			Theresa Weitzel
Magda D. Cividanes			Magda D. Cividanes
Robin Merlitt			Robin Merlitt
Debra Wilday			Debra Wilday
Jeff Wilday			Jeff Wilday
Jamie Sander			Jamie Sander

Please print, sign and mail petition back by TUESDAY, MAY 26, 2015 to:
Citiva Medical LLC
7378 Amboy Road
Staten Island, NY 10307

PETITION IN SUPPORT OF CITIVA MEDICAL

New York State has enacted a limited medical marijuana program to help treat people with certain conditions, including Cancer, HIV/AIDS, ALS, Parkinson's Disease, MS, Spinal Cord Damage, Epilepsy, Dravet Syndrome, Inflammatory Bowel Syndrome, Huntington's Disease and Neuropathy.

This program, administered through **the Department of Health, will finally bring relief to many suffering patients in New York.** The DOH will grant 5 licenses to operate as registered organizations (RO) allowed to grow, extract and dispense medical marijuana.

Led by preeminent medical cannabis advocate and entrepreneur Josh Stanley, **Citiva Medical is a New York State company specializing in safe and effective products based on the latest advancements in cannabinoid medicine.** Citiva Medical's mission also includes conducting research and developing partnerships with universities, hospitals and institutions across the state to **establish New York as the global epicenter for cannabinoid research.**

ROs are not all created equal. Standardization is of the utmost importance so that patients will receive consistent and safe doses of their medication. Citiva Medical will be the industry leader based upon their stringent standardization policies and procedures. Citiva Medical has a team with **over 100 combined years of experience in clinical healthcare and the medicinal cannabis industry** and will bring safe and effective products to patients in New York.

I strongly support the New York State Department of Health granting RO status to Citiva Medical. As a responsible leader in this industry, Citiva Medical will bring safe quality medicine to patients suffering from chronic and debilitating disease and provide them with a chance at a better quality of life.

NAME	ADDRESS	PHONE/EMAIL	SIGNATURE
Toni + Michele Conigatti	[redacted]		
Mildred + Ed Rethorn			
Ron + Donna Mastropolo			
Larry Wunderlich			
Christopher Poland			
Bobby Castro			
Joe Cicconi			
Kerry m Smith			

Please print, sign and mail petition back by TUESDAY, MAY 26, 2015 to:
Citiva Medical LLC
7378 Amboy Road
Staten Island, NY 10307

PETITION IN SUPPORT OF CITIVA MEDICAL

New York State has enacted a limited medical marijuana program to help treat people with certain conditions, including Cancer, HIV/AIDS, ALS, Parkinson's Disease, MS, Spinal Cord Damage, Epilepsy, Dravet Syndrome, Inflammatory Bowel drome, Huntington's Disease and Neuropathy.

This program, administered through **the Department of Health, will finally bring relief to many suffering patients in New York.** The DOH will grant 5 licenses to operate as registered organizations (RO) allowed to grow, extract and dispense medical marijuana.

Led by preeminent medical cannabis advocate and entrepreneur Josh Stanley, **Citiva Medical is a New York State company specializing in safe and effective products based on the latest advancements in cannabinoid medicine.** Citiva Medical's mission also includes conducting research and developing partnerships with universities, hospitals and institutions across the state to **establish New York as the global epicenter for cannabinoid research.**

ROs are not all created equal. Standardization is of the utmost importance so that patients will receive consistent and safe doses of their medication. Citiva Medical will be the industry leader based upon their stringent standardization policies and procedures. Citiva Medical has a team with **over 100 combined years of experience in clinical healthcare and the medicinal cannabis industry** and will bring safe and effective products to patients in New York.

I strongly support the New York State Department of Health granting RO status to Citiva Medical. As a responsible leader in this industry, Citiva Medical will bring safe quality medicine to patients suffering from chronic and debilitating disease and provide them with a chance at a better quality of life.

NAME	ADDRESS	PHONE/EMAIL	SIGNATURE
Bernadette Favaloro	[redacted]	[redacted]	B. Favaloro
Craig Peterson	[redacted]	[redacted]	
Mark Van Wagoner	[redacted]	[redacted]	
Christopher Jones	[redacted]	[redacted]	
Tom Rose	[redacted]	[redacted]	
Maria Cristelli	[redacted]	[redacted]	
Patricia Ray-Torres	[redacted]	[redacted]	Patricia Ray-Torres
Frank Bavaro	[redacted]	[redacted]	
Kathy Mulvey	[redacted]	[redacted]	
Carol Latorre	[redacted]	[redacted]	
Joan Calabro	[redacted]	[redacted]	Joan Calabro
Dennis Calabro	[redacted]	[redacted]	
Joseph C Manaro	[redacted]	[redacted]	

Please print, sign and mail petition back by TUESDAY, MAY 26, 2015 to:
Citiva Medical LLC
7378 Amboy Road
Staten Island, NY 10307

PETITION IN SUPPORT OF CITIVA MEDICAL

New York State has enacted a limited medical marijuana program to help treat people with certain conditions, including Cancer, HIV/AIDS, ALS, Parkinson's Disease, MS, Spinal Cord Damage, Epilepsy, Dravet Syndrome, Inflammatory Bowel ndrome, Huntington's Disease and Neuropathy.

This program, administered through **the Department of Health, will finally bring relief to many suffering patients in New York.** The DOH will grant 5 licenses to operate as registered organizations (RO) allowed to grow, extract and dispense medical marijuana.

Led by preeminent medical cannabis advocate and entrepreneur Josh Stanley, **Citiva Medical is a New York State company specializing in safe and effective products based on the latest advancements in cannabinoid medicine.** Citiva Medical's mission also includes conducting research and developing partnerships with universities, hospitals and institutions across the state to **establish New York as the global epicenter for cannabinoid research.**

ROs are not all created equal. Standardization is of the utmost importance so that patients will receive consistent and safe doses of their medication. Citiva Medical will be the industry leader based upon their stringent standardization policies and procedures. Citiva Medical has a team with **over 100 combined years of experience in clinical healthcare and the medicinal cannabis industry** and will bring safe and effective products to patients in New York.

I strongly support the New York State Department of Health granting RO status to Citiva Medical. As a responsible leader in this industry, Citiva Medical will bring safe quality medicine to patients suffering from chronic and debilitating disease and provide them with a chance at a better quality of life.

NAME	ADDRESS	PHONE/EMAIL	SIGNATURE
Phyllis Kaye	[redacted]	[redacted]	Phyllis Kaye
Steven Kaye			
[illegible]			
Rosalie [illegible]			
ROSE INFUSO			
~~LINDA VENTR~~			
Linda Ventrone			
Risa Aponte			
[illegible]			
Marie Rendes			
Thomas Reynolds			
Charlotte REYNOLDS			
Maureen Morse			

Please print, sign and mail petition back by TUESDAY, MAY 26, 2015 to:
Citiva Medical LLC
7378 Amboy Road
Staten Island, NY 10307

PETITION IN SUPPORT OF CITIVA MEDICAL

New York State has enacted a limited medical marijuana program to help treat people with certain conditions, including Cancer, HIV/AIDS, ALS, Parkinson's Disease, MS, Spinal Cord Damage, Epilepsy, Dravet Syndrome, Inflammatory Bowel ndrome, Huntington's Disease and Neuropathy.

This program, administered through **the Department of Health, will finally bring relief to many suffering patients in New York.** The DOH will grant 5 licenses to operate as registered organizations (RO) allowed to grow, extract and dispense medical marijuana.

Led by preeminent medical cannabis advocate and entrepreneur Josh Stanley, **Citiva Medical is a New York State company specializing in safe and effective products based on the latest advancements in cannabinoid medicine.** Citiva Medical's mission also includes conducting research and developing partnerships with universities, hospitals and institutions across the state to **establish New York as the global epicenter for cannabinoid research.**

ROs are not all created equal. Standardization is of the utmost importance so that patients will receive consistent and safe doses of their medication. Citiva Medical will be the industry leader based upon their stringent standardization policies and procedures. Citiva Medical has a team with **over 100 combined years of experience in clinical healthcare and the medicinal cannabis industry** and will bring safe and effective products to patients in New York.

I strongly support the New York State Department of Health granting RO status to Citiva Medical. As a responsible leader in this industry, Citiva Medical will bring safe quality medicine to patients suffering from chronic and debilitating disease and provide them with a chance at a better quality of life.

NAME	ADDRESS	PHONE/EMAIL	SIGNATURE
Sharry Bennett	[redacted]		
Malcolm Fowle			
Richard Komen			
Eileen Stiefel			
Angela D'Angelo			
Louis Hoeh			
John Cesa Jr.			
Larry Evangelista			
Richard Martino			
Steven J. Ucitt			
Neal Schoen			
Donald Yarrower			
George Cotsomitis			

Please print, sign and mail petition back by TUESDAY, MAY 26, 2015 to:
Citiva Medical LLC
7378 Amboy Road
Staten Island, NY 10307

PETITION IN SUPPORT OF CITIVA MEDICAL

New York State has enacted a limited medical marijuana program to help treat people with certain conditions, including ancer, HIV/AIDS, ALS, Parkinson's Disease, MS, Spinal Cord Damage, Epilepsy, Dravet Syndrome, Inflammatory Bowel Syndrome, Huntington's Disease and Neuropathy.

This program, administered through **the Department of Health, will finally bring relief to many suffering patients in New York.** The DOH will grant 5 licenses to operate as registered organizations (RO) allowed to grow, extract and dispense medical marijuana.

Led by preeminent medical cannabis advocate and entrepreneur Josh Stanley, **Citiva Medical is a New York State company specializing in safe and effective products based on the latest advancements in cannabinoid medicine.** Citiva Medical's mission also includes conducting research and developing partnerships with universities, hospitals and institutions across the state to **establish New York as the global epicenter for cannabinoid research.**

ROs are not all created equal. Standardization is of the utmost importance so that patients will receive consistent and safe doses of their medication. Citiva Medical will be the industry leader based upon their stringent standardization policies and procedures. Citiva Medical has a team with **over 100 combined years of experience in clinical healthcare and the medicinal cannabis industry** and will bring safe and effective products to patients in New York.

I strongly support the New York State Department of Health granting RO status to Citiva Medical. As a responsible leader in this industry, Citiva Medical will bring safe quality medicine to patients suffering from chronic and debilitating disease and provide them with a chance at a better quality of life.

NAME	ADDRESS	PHONE/EMAIL	SIGNATURE
Judith C. Caron	[redacted]		
Kelly Licht			
Carol Thomas			
LINDA RICHARDSON			
Constance Uhrey			
Rachel Karnath			
Margy Hagen			
Andrew Cichocki			
Amy Fetterly			
Danielle Pitirri			
Judith Pitirri			
RICHARD L CROAD			
Kelly Murphy			
Drue Rounds			

Please print, sign and mail petition back by TUESDAY, MAY 26, 2015 to:

Citiva Medical LLC
7378 Amboy Road
Staten Island, NY 10307

PETITION IN SUPPORT OF CITIVA MEDICAL

New York State has enacted a limited medical marijuana program to help treat people with certain conditions, including Cancer, HIV/AIDS, ALS, Parkinson's Disease, MS, Spinal Cord Damage, Epilepsy, Dravet Syndrome, Inflammatory Bowel Syndrome, Huntington's Disease and Neuropathy.

This program, administered through **the Department of Health, will finally bring relief to many suffering patients in New York.** The DOH will grant 5 licenses to operate as registered organizations (RO) allowed to grow, extract and dispense medical marijuana.

Led by preeminent medical cannabis advocate and entrepreneur Josh Stanley, **Citiva Medical is a New York State company specializing in safe and effective products based on the latest advancements in cannabinoid medicine.** Citiva Medical's mission also includes conducting research and developing partnerships with universities, hospitals and institutions across the state to **establish New York as the global epicenter for cannabinoid research.**

ROs are not all created equal. Standardization is of the utmost importance so that patients will receive consistent and safe doses of their medication. Citiva Medical will be the industry leader based upon their stringent standardization policies and procedures. Citiva Medical has a team with **over 100 combined years of experience in clinical healthcare and the medicinal cannabis industry** and will bring safe and effective products to patients in New York.

I strongly support the New York State Department of Health granting RO status to Citiva Medical. As a responsible leader in this industry, Citiva Medical will bring safe quality medicine to patients suffering from chronic and debilitating disease and provide them with a chance at a better quality of life.

NAME	ADDRESS	PHONE/EMAIL	SIGNATURE
Zachary Smith	[redacted]		
Nicole Hunt			
Desiree Vollmer			
Erich Gamin			
Matthew Russo			
Anthony Cebarro			
Brian Folwell			
Jayson Sears			
Ron Nychas			

Please print, sign and mail petition back by TUESDAY, MAY 26, 2015 to:
Citiva Medical LLC
7378 Amboy Road
Staten Island, NY 10307

PETITION IN SUPPORT OF CITIVA MEDICAL

New York State has enacted a limited medical marijuana program to help treat people with certain conditions, including Cancer, HIV/AIDS, ALS, Parkinson's Disease, MS, Spinal Cord Damage, Epilepsy, Dravet Syndrome, Inflammatory Bowel Syndrome, Huntington's Disease and Neuropathy.

This program, administered through the Department of Health, will finally bring relief to many suffering patients in New York. The DOH will grant 5 licenses to operate as registered organizations (RO) allowed to grow, extract and dispense medical marijuana.

Led by preeminent medical cannabis advocate and entrepreneur Josh Stanley, Citiva Medical is a New York State company specializing in safe and effective products based on the latest advancements in cannabinoid medicine. Citiva Medical's mission also includes conducting research and developing partnerships with universities, hospitals and institutions across the state to establish New York as the global epicenter for cannabinoid research.

ROs are not all created equal. Standardization is of the utmost importance so that patients will receive consistent and safe doses of their medication. Citiva Medical will be the industry leader based upon their stringent standardization policies and procedures. Citiva Medical has a team with over 100 combined years of experience in clinical healthcare and the medicinal cannabis industry and will bring safe and effective products to patients in New York.

I strongly support the New York State Department of Health granting RO status to Citiva Medical. As a responsible leader in this industry, Citiva Medical will bring safe quality medicine to patients suffering from chronic and debilitating disease and provide them with a chance at a better quality of life.

NAME	ADDRESS	PHONE/EMAIL	SIGNATURE
Lois Caruso	[redacted]	[redacted]	
Lucy Caruso			
Paul Stewart			
Elizabeth Conant			
Nadine Dalessio			
Fran Labieda			
Carla DeSarro			
Maria Perry			

Please print, sign and mail petition back by TUESDAY, MAY 26, 2015 to:

Citiva Medical LLC
7378 Amboy Road
Staten Island, NY 10307

PETITION IN SUPPORT OF CITIVA MEDICAL

New York State has enacted a limited medical marijuana program to help treat people with certain conditions, including Cancer, HIV/AIDS, ALS, Parkinson's Disease, MS, Spinal Cord Damage, Epilepsy, Dravet Syndrome, Inflammatory Bowel Syndrome, Huntington's Disease and Neuropathy.

This program, administered through **the Department of Health, will finally bring relief to many suffering patients in New York.** The DOH will grant 5 licenses to operate as registered organizations (RO) allowed to grow, extract and dispense medical marijuana.

Led by preeminent medical cannabis advocate and entrepreneur Josh Stanley, **Citiva Medical is a New York State company specializing in safe and effective products based on the latest advancements in cannabinoid medicine.** Citiva Medical's mission also includes conducting research and developing partnerships with universities, hospitals and institutions across the state to **establish New York as the global epicenter for cannabinoid research.**

ROs are not all created equal. Standardization is of the utmost importance so that patients will receive consistent and safe doses of their medication. Citiva Medical will be the industry leader based upon their stringent standardization policies and procedures. Citiva Medical has a team with **over 100 combined years of experience in clinical healthcare and the medicinal cannabis industry** and will bring safe and effective products to patients in New York.

I strongly support the New York State Department of Health granting RO status to Citiva Medical. As a responsible leader in this industry, Citiva Medical will bring safe quality medicine to patients suffering from chronic and debilitating disease and provide them with a chance at a better quality of life.

NAME	[redacted]	SIGNATURE
Gustavo Orozco		[signature]
PATRICK O'DEA		[signature]
Scott Macleod		[signature]
Helene Iorda		[signature]
Eiten Caluci		[signature]
AnnePenatello		[signature]
Tyler Vruppa		[signature]
DOMINIC LAI		[signature]
Karen Passbur		[signature]
Adam Bokhari		[signature]
Sean Hilde		[signature]

Please print, sign and mail petition back by TUESDAY, MAY 26, 2015 to:
Citiva Medical LLC
7378 Amboy Road
Staten Island, NY 10307

PETITION IN SUPPORT OF CITIVA MEDICAL

New York State has enacted a limited medical marijuana program to help treat people with certain conditions, including Cancer, HIV/AIDS, ALS, Parkinson's Disease, MS, Spinal Cord Damage, Epilepsy, Dravet Syndrome, Inflammatory Bowel ndrome, Huntington's Disease and Neuropathy.

This program, administered through **the Department of Health, will finally bring relief to many suffering patients in New York.** The DOH will grant 5 licenses to operate as registered organizations (RO) allowed to grow, extract and dispense medical marijuana.

Led by preeminent medical cannabis advocate and entrepreneur Josh Stanley, **Citiva Medical is a New York State company specializing in safe and effective products based on the latest advancements in cannabinoid medicine.** Citiva Medical's mission also includes conducting research and developing partnerships with universities, hospitals and institutions across the state to **establish New York as the global epicenter for cannabinoid research.**

ROs are not all created equal. Standardization is of the utmost importance so that patients will receive consistent and safe doses of their medication. Citiva Medical will be the industry leader based upon their stringent standardization policies and procedures. Citiva Medical has a team with **over 100 combined years of experience in clinical healthcare and the medicinal cannabis industry** and will bring safe and effective products to patients in New York.

I strongly support the New York State Department of Health granting RO status to Citiva Medical. As a responsible leader in this industry, Citiva Medical will bring safe quality medicine to patients suffering from chronic and debilitating disease and provide them with a chance at a better quality of life.

NAME	ADDRESS	PHONE/EMAIL	SIGNATURE
Noelle Ponadello	[redacted]		
Joseph Pongillo			
Patricia O'Dea			
Greg Bard			
German Arthur			
Brian Massaro			
Salvatore Mirasolia			
MAURO AMOROSO			
John Quinn			
Miguel Pastoriza			
David Lupo			
Luis Nieves			
Natale Mirc			
Rob Mirzuchin			

Please print, sign and mail petition back by TUESDAY, MAY 26, 2015 to:
Citiva Medical LLC
7378 Amboy Road
Staten Island, NY 10307

[redacted]

PETITION IN SUPPORT OF CITIVA MEDICAL

New York State has enacted a limited medical marijuana program to help treat people with certain conditions, including Cancer, HIV/AIDS, ALS, Parkinson's Disease, MS, Spinal Cord Damage, Epilepsy, Dravet Syndrome, Inflammatory Bowel Syndrome, Huntington's Disease and Neuropathy.

This program, administered through **the Department of Health, will finally bring relief to many suffering patients in New York.** The DOH will grant 5 licenses to operate as registered organizations (RO) allowed to grow, extract and dispense medical marijuana.

Led by preeminent medical cannabis advocate and entrepreneur Josh Stanley, **Citiva Medical is a New York State company specializing in safe and effective products based on the latest advancements in cannabinoid medicine.** Citiva Medical's mission also includes conducting research and developing partnerships with universities, hospitals and institutions across the state to **establish New York as the global epicenter for cannabinoid research.**

ROs are not all created equal. Standardization is of the utmost importance so that patients will receive consistent and safe doses of their medication. Citiva Medical will be the industry leader based upon their stringent standardization policies and procedures. Citiva Medical has a team with **over 100 combined years of experience in clinical healthcare and the medicinal cannabis industry** and will bring safe and effective products to patients in New York.

I strongly support the New York State Department of Health granting RO status to Citiva Medical. As a responsible leader in this industry, Citiva Medical will bring safe quality medicine to patients suffering from chronic and debilitating disease and provide them with a chance at a better quality of life.

NAME	ADDRESS	PHONE/EMAIL	SIGNATURE
Gertsel Shatashvili	[redacted]	[redacted]	
Meghan Donahue			
Thomas LaCognata			
Dawn Adinolfi			
Carolyn Ribaudo			Carolyn Ribaudo
Ludwig Ribaudo			
Douglas Ribaudo			Douglas Ribaudo

Please print, sign and mail petition back by TUESDAY, MAY 26, 2015 to:
Citiva Medical LLC
7378 Amboy Road
Staten Island, NY 10307

PETITION IN SUPPORT OF CITIVA MEDICAL

New York State has enacted a limited medical marijuana program to help treat people with certain conditions, including Cancer, HIV/AIDS, ALS, Parkinson's Disease, MS, Spinal Cord Damage, Epilepsy, Dravet Syndrome, Inflammatory Bowel Syndrome, Huntington's Disease and Neuropathy.

This program, administered through **the Department of Health, will finally bring relief to many suffering patients in New York.** The DOH will grant 5 licenses to operate as registered organizations (RO) allowed to grow, extract and dispense medical marijuana.

Led by preeminent medical cannabis advocate and entrepreneur Josh Stanley, **Citiva Medical is a New York State company specializing in safe and effective products based on the latest advancements in cannabinoid medicine.** Citiva Medical's mission also includes conducting research and developing partnerships with universities, hospitals and institutions across the state to **establish New York as the global epicenter for cannabinoid research.**

ROs are not all created equal. Standardization is of the utmost importance so that patients will receive consistent and safe doses of their medication. Citiva Medical will be the industry leader based upon their stringent standardization policies and procedures. Citiva Medical has a team with **over 100 combined years of experience in clinical healthcare and the medicinal cannabis industry** and will bring safe and effective products to patients in New York.

I strongly support the New York State Department of Health granting RO status to Citiva Medical. As a responsible leader in this industry, Citiva Medical will bring safe quality medicine to patients suffering from chronic and debilitating disease and provide them with a chance at a better quality of life.

NAME	ADDRESS	PHONE/EMAIL	SIGNATURE
SaraAnne Courtney	[redacted]		SaraAnne Courtney
Delia Lynch			
Kenneth Courtney			KCourtney
KATHY SANTORO			Kathy Santoro
MARY COURTNEY			Mary Courtney
[illegible]			Regina Briordy
Monica Fazio			Monica Fazio
Benny Fazio			Benny Fazio
ROSE Fazio			Rose Fazio
Joseph Storniolo			Joseph Storniolo

Please print, sign and mail petition back by TUESDAY, MAY 26, 2015 to:
Citiva Medical LLC
7378 Amboy Road
Staten Island, NY 10307

PETITION IN SUPPORT OF CITIVA MEDICAL

New York State has enacted a limited medical marijuana program to help treat people with certain conditions, including Cancer, HIV/AIDS, ALS, Parkinson's Disease, MS, Spinal Cord Damage, Epilepsy, Dravet Syndrome, Inflammatory Bowel Syndrome, Huntington's Disease and Neuropathy.

This program, administered through **the Department of Health, will finally bring relief to many suffering patients in New York.** The DOH will grant 5 licenses to operate as registered organizations (RO) allowed to grow, extract and dispense medical marijuana.

Led by preeminent medical cannabis advocate and entrepreneur Josh Stanley, **Citiva Medical is a New York State company specializing in safe and effective products based on the latest advancements in cannabinoid medicine.** Citiva Medical's mission also includes conducting research and developing partnerships with universities, hospitals and institutions across the state to **establish New York as the global epicenter for cannabinoid research.**

ROs are not all created equal. Standardization is of the utmost importance so that patients will receive consistent and safe doses of their medication. Citiva Medical will be the industry leader based upon their stringent standardization policies and procedures. Citiva Medical has a team with **over 100 combined years of experience in clinical healthcare and the medicinal cannabis industry** and will bring safe and effective products to patients in New York.

I strongly support the New York State Department of Health granting RO status to Citiva Medical. As a responsible leader in this industry, Citiva Medical will bring safe quality medicine to patients suffering from chronic and debilitating disease and provide them with a chance at a better quality of life.

NAME	ADDRESS	PHONE/EMAIL	SIGNATURE
Kristie Ricciardella	[redacted]		Kristie Ricciardella
Jennifer Nesenshn			
Claudia Salvaggio			Claudia Salvaggio
Deborah Kenn			
Rebecca Hoyracki			
Kim Schulz			
Jeanne Romanello			
ELAINE POCHANK			Elaine Pochank
Sharon Finley			
Pat Harden			
Susan DeFede			

Please print, sign and mail petition back by TUESDAY, MAY 26, 2015 to:
Citiva Medical LLC
7378 Amboy Road
Staten Island, NY 10307

CITIVA MEDICAL LLC

MEDICAL MARIHUANA PROGRAM

APPENDIX A

AFFIDAVIT FOR BOARD MEMBERS, OFFICERS, MANAGERS, OWNERS, PARTNERS, PRINCIPAL STAKEHOLDERS, DIRECTORS AND MEMBERS

CITIVA MEDICAL LLC
ORGANIZATIONAL CHART – CORPORATE

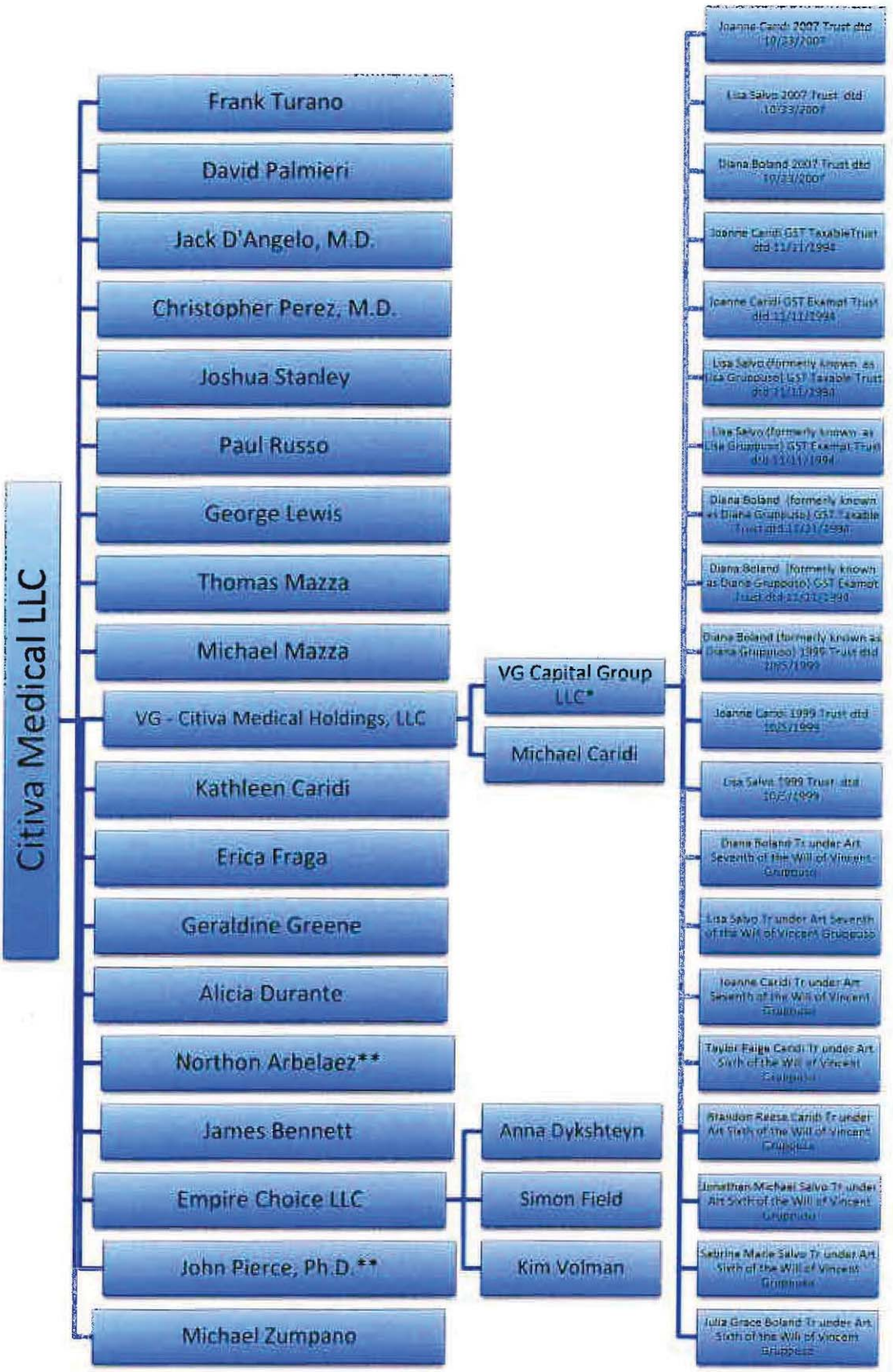

* Trustees include Diana Boland, Joanne Caridi, Michael Caridi and Lisa Salvo

** Will have ownership of less than 10% on receipt of registration and has therefore provided an Appendix A.

1) Asher Flaum, listed as a member in the operating agreement, does not have ownership and will seek ownership after registration. As a result, Mr. Flaum has not provided an Appendix A.
2) Dan Rogers, a non-member who will have contact with medical marihuana, has also provided an Appendix A.

Appendix A:
Affidavit for Board Members, Officers, Managers, Owners, Partners, Principal Stakeholders, Directors, and Members

Appendix A **must** be completed for all board members, officers, managers, owners, partners, principal stakeholders, directors, and members. For board members, officers, managers, owners, partners, directors, and members of the applicant that are not natural persons, Appendix A must be completed by each board member, officer, manager, owner, partner, director and member of that entity, going back to the level of ownership by a natural person. **An Organizational Chart documenting your organizational structure must be included with this application.**

1. Business Name: Citiva Medical LLC

This is the name that was entered in Section A of the Application for Registration as a Registered Organization.

2. Name: Northon J Arbelaez | 3. Title: Member

4. Briefly describe the role of this person or entity in the proposed registered organization:

Develop an understanding of the business, market and industry trends
Provide counsel on issues raised by owners/directors or management
Provide unbiased insights and ideas from a third point-of-view (not involved in the operation of the business)
Encourage and support the exploration of new business ideas
Act as a resource for executives
Provide social networking platform for directors and the company

5. Will this person or entity come into contact with medical marijuana or medical marijuana products?

☐ Yes ☑ No

Any managers who may come in contact with or handle medical marijuana, including medical marijuana products, shall be subject to a fingerprinting process as part of a criminal history background check in compliance with the procedures established by Division of Criminal Justice Services and submission of the applicable fee. Criminal history background checks must be done through Identogo at http://www.identogo.com/FP/NewYork.aspx using the ORI number NY0412500 and the Fingerprint Reason "Control Substance License."

6. Has this person or entity held any position of management or ownership during the preceding ten years of a 10% or greater interest in any other business which manufactured or distributed drugs? ☑ Yes ☐ No

If the answer to this question is yes, provide the name of the business, a statement defining the position of management or ownership held in such business, and any finding of violations of law or regulation by a governmental agency against the business or person or entity.

[redacted] Owner

[redacted]

No finding of violations of law or regulation by [redacted]

Appendix A:
Affidavit for Board Members, Officers, Managers, Owners, Partners, Principal Stakeholders, Directors, and Members

7. Has this person or entity been convicted of a felony or had any type of registration or license suspended or revoked in any administrative or judicial proceeding?
☐ Yes ☑ No

If the answer to either of these questions is "Yes," a statement explaining the circumstances of the felony, suspension or revocation must be provided below.

8. Phone: [redacted]	9. Fax:
10. Email: [redacted]	
11. Residence Address: [redacted]	
12. City: [redacted]	13. State: [redacted] 14. ZIP Code: [redacted]

15. Formal Education		Dates Attended		Degree	
Institution	Address	From	To	Degree Received	Date Received
Tulane University Law School	6329 Freret St New Orleans, LA	2003	2006	Juris Doctor	12/2006
University of Oklahoma	660 Parrington Oval Norman, OK	1997	2002	Bachelor of Arts International Studies	5/2002
[redacted]	[redacted]	[redacted]	[redacted]		

Appendix A:
Affidavit for Board Members, Officers, Managers, Owners, Partners, Principal Stakeholders, Directors, and Members

16. Licenses Held: List any and all licenses issued by a governmental or other regulatory entity.

Type of Professional License	License Number	Institution Granting License (Mailing Address, Phone, Email)	Effective Date	Expiration Date
Attorney at Law	30851	Lousiana Bar Association	2007	Good standing
Medical/Retail Owner	M00306	Colorado Dept. of Rev. Marijuana Enforcement Division	2010	Good Standing
Dispensary Agent	A11169	Masschusetts Dept. of Public Health	2015	Good Standing

17. Employment History for the Past 10 Years: Start with MOST RECENT employment and include employment during the last 10 years. Attach additional copies of page 3, if necessary.

Redacted pursuant to N.Y. Public Officers Law, Art.6

Appendix A:

Affidavit for Board Members, Officers, Managers, Owners, Partners, Principal Stakeholders, Directors, and Members

Redacted pursuant to N.Y. Public Officers Law, Art.6

Name of Employer:		
Type of Business:		
Street Address:		
City:	State:	Zip Code:
Starting Date of Employment:	Ending Date of Employment:	
Name of Supervisor for Reference:	Supervisor Phone Number:	
Position/Responsibilities:		
Reason For Departure:		
Name of Employer:		

Appendix A:
Affidavit for Board Members, Officers, Managers, Owners, Partners, Principal Stakeholders, Directors, and Members

Type of Business:		
Street Address:		
City:	State:	Zip Code:
Starting Date of Employment:	Ending Date of Employment:	
Name of Supervisor for Reference:	Supervisor Phone Number:	
Position/Responsibilities:		
Reason For Departure:		
Name of Employer:	Type of Business:	
Street Address:		
City:	State:	Zip Code:
Starting Date of Employment:	Ending Date of Employment:	
Name of Supervisor for Reference:	Supervisor Phone Number:	
Position/Responsibilities:		
Reason For Departure:		

18. Offices Held or Ownership Interest in Other Businesses

List any affiliations you have been associated with in the past 10 years. Affiliation, for the purpose of this section, includes serving as either a board member, officer, manager, owner, partner, principal stakeholder, director or member of the organization. Organizations outside of New York State must also be disclosed.

Have you owned or operated a business or had any affiliations with the operations of a business in New York, in the USA, or in other countries? ☑ **Yes** ☐ **No**

From: 2010	Name and Address of Business: River Rock LLC	
To: Present		
Business Type: Medical/Recreational Marijuana	Office Held/Nature of Interest: [redacted] Member	☑ **open** ☐ **closed** ☐ **proposed**

Name, Address and Phone Number of Licensing/Regulatory Agency, if applicable:

Colorado Dept. of Rev. Marijuana Enforcement Div. 455 Sherman Street Suite 390 Denver CO 303-205-8421

Appendix A:
Affidavit for Board Members, Officers, Managers, Owners, Partners, Principal Stakeholders, Directors, and Members

From: 2012 To: Present	Name and Address of Business: Cure Medical Pharm Inc. DBA River Rock South	
Business Type: Medical/Recreational Marijuana	Office Held/Nature of Interest: [redacted] Shareholder	☑ open ☐ closed ☐ proposed
Name, Address and Phone Number of Licensing/Regulatory Agency, if applicable: Colorado Dept. of Rev. Marijuana Enforcement Div. 455 Sherman Street Suite 390 Denver CO 303-205-8421		
From: 2014 To: Present	Name and Address of Business: Aegis LLC 1540 West 52 Ave Denver CO 80221	
Business Type: Consulting	Office Held/Nature of Interest: Member [redacted]	☑ open ☐ closed ☐ proposed
Name, Address and Phone Number of Licensing/Regulatory Agency, if applicable: N/A		
From: 2014 To: 2015	Name and Address of Business: Arbko Solutions LLC 1540 West 52 Ave Denver CO 80221	
Business Type: Consulting	Office Held/Nature of Interest: Member [redacted]	☑ open ☐ closed ☐ proposed
Name, Address and Phone Number of Licensing/Regulatory Agency, if applicable: N/A		

Appendix A:
Affidavit for Board Members, Officers, Managers, Owners, Partners, Principal Stakeholders, Directors, and Members

19. Affirmative Statement of Qualifications

For individuals who have not previously served as a director/officer nor have had managerial experience, please include a statement below explaining how you are qualified to operate the proposed facility. This statement should include, but not be limited to, any relevant community/volunteer background and experience.

Please refer to my attached biography, which details my experience and capability to play an important role in the operation of the Registered Organization.

20. The undersigned certifies, under penalty of perjury, that the information contained herein or attached hereto is accurate, true, and complete in all material respects.

Signature:	Date: June 1 2015
Notary Name: Yarinel Ramos	Notary Registration Number: 20144042301
Notary (Notary Must Affix Stamp or Seal)	Date: June 1, 2015

YARINEL RAMOS
Notary Public
State of Colorado
Notary ID 20144042301
My Commission Expires Oct 30, 2018

Norton Arbelaez

Norton is a first-generation American whose family instilled early on the value of education and the importance of community involvement. At the University of Oklahoma he received a Bachelor of Arts and Sciences in International Studies *Summa Cum Laude* and earned a fellowship with the Carl Albert Congressional Research & Studies Center. He also interned with the Organization of American States where he compiled a database of human rights abuses as reported to the International Council of Human Rights in San Jose, Costa Rica.

In 2006 Norton graduated from Tulane University Law School where he was appointed Moot Court Senior Justice and participated in the Willem C Vis International Commercial Arbitration Competition in Vienna. He attended specialization courses in Corporate Governance at the Center for International Human Rights in Amsterdam and the Queen Mary Centre for Commercial Law Studies in London. While at Tulane Law he volunteered with the Catholic Archdiocese where he was a legal intern working with immigration, asylum and social justice issues.

After law school and having personally witnessed the personal and economic ravages of Hurricane Katrina in New Orleans, Norton represented families in their insurance claims and successfully litigated in state and federal courts in Louisiana.

Redacted pursuant to N.Y. Public Officers Law, Art.6

Redacted pursuant to N.Y. Public Officers Law, Art.6

He has formed part of the Colorado Department of Revenue's Medical Marijuana Advisory Board, the City of Denver's Medical Marijuana Workgroup, and Governor Hickenlooper's Amendment 64 regulatory taskforce. This involvement has permitted Norton to be directly engaged in the development and drafting of Colorado's regulatory framework and to participate in policy discussions with members of the public and private sector to promote a responsible and judicious approach to cannabis regulation.

Redacted pursuant to N.Y. Public Officers Law, Art.6

Norton has lectured and presented on the issues surrounding cannabis regulation at national and international forums including the National Marijuana Business Conference, the Drug Policy Alliance Biennial Conference, the Colorado Renewable Energy Conference, and the International Conference on the Regulation of Psychotropic Substances in Bogota.

He has also been featured in national and international media for his role in the development of Colorado regulatory scheme.

- The UK Independent explores regulated cannabis http://www.independent.co.uk/news/world/americas/mile-high-city-inside-denvers-billiondollar-marijuana-industry-8740525.html
- International delegation visits RiverRock http://www.denverpost.com/breakingnews/ci_24374729/international-delegation-gets-lesson-colorado-pot-practices
- Colorado Industry at display at drug policy talks

medical potential. [redacted]

He has formed part of the Colorado Department of Revenue's Medical Marijuana Advisory Board, the City of Denver's Medical Marijuana Workgroup, and Governor Hickenlooper's Amendment 64 regulatory taskforce. This involvement has permitted Norton to be directly engaged in the development and drafting of Colorado's regulatory framework and to participate in policy discussions with members of the public and private sector to promote a responsible and judicious approach to cannabis regulation.

Redacted pursuant to N.Y. Public Officers Law, Art.6

Norton has lectured and presented on the issues surrounding cannabis regulation at national and international forums including the National Marijuana Business Conference, the Drug Policy Alliance Biennial Conference, the Colorado Renewable Energy Conference, and the International Conference on the Regulation of Psychotropic Substances in Bogota.

He has also been featured in national and international media for his role in the development of Colorado regulatory scheme.

- The UK Independent explores regulated cannabis http://www.independent.co.uk/news/world/americas/mile-high-city-inside-denvers-billiondollar-marijuana-industry-8740525.html
- International delegation visits RiverRock http://www.denverpost.com/breakingnews/ci_24374729/international-delegation-gets-lesson-colorado-pot-practices
- Colorado Industry at display at drug policy talks

http://start.toshiba.com/news/read/category/Ap%20Online%20National%20News/article/ap-colo_pot_industry_on_display_at_drugpoli-ap

- To the Point NPR Legalizing Medical Marijuana
  http://www.kcrw.com/news/programs/tp/tp130508legalizing_marijuana

- Abogado Hispano de RiverRock Norton Arbelaez en Univision
  http://noticias.univision.com/aqui-y-ahora/article/2012-12-09/con-licencia-para-fumar - axzz2MbnSfl9k

- Colorado's System of Closed Loop Production NPR
  http://www.cpr.org/ -
  load_article|Should_Pot_Shops_Grow_Their_Own_Product

NORTON J. ARBELAEZ
LOUISIANA STATE BAR #30851

EXPERIENCE

Redacted pursuant to N.Y. Public Officers Law, Art.6

In this capacity Mr. Arbelaez served on of the *Colorado Department of Revenue's Medical Marijuana Advisory Board*, the *City of Denver's Medical Marijuana Working Group*, and *Governor Hickenlooper's Amendment 64 Taskforce Regulatory Working Group.*

Redacted pursuant to N.Y. Public Officers Law, Art.6

ORGANIZATION OF AMERICAN STATES (OAS) 2000

Involved in the compilation of a database of human rights abuses in Latin America as reported to the International Council of Human Rights, simultaneous translation.

Redacted pursuant to N.Y. Public Officers Law, Art.6

NEW YORK STATE | Department of Health

Medical Marijuana Program
Application for Registration as a Registered Organization

Appendix A:
Affidavit for Board Members, Officers, Managers, Owners, Partners, Principal Stakeholders, Directors, and Members

Appendix A **must** be completed for all board members, officers, managers, owners, partners, principal stakeholders, directors, and members. For board members, officers, managers, owners, partners, directors, and members of the applicant that are not natural persons, Appendix A must be completed by each board member, officer, manager, owner, partner, director and member of that entity, going back to the level of ownership by a natural person. **An Organizational Chart documenting your organizational structure must be included with this application.**

1. Business Name: Citiva Medical LLC
This is the name that was entered in Section A of the Application for Registration as a Registered Organization.

2. Name: James Bennett | 3. Title: Member

4. Briefly describe the role of this person or entity in the proposed registered organization:
Although I will not play an active role in the day-to-day operations, I will provide support and advice to the management team, based on my business experience.

5. Will this person or entity come into contact with medical marijuana or medical marijuana products?
☐ Yes ☒ No

Any managers who may come in contact with or handle medical marijuana, including medical marijuana products, shall be subject to a fingerprinting process as part of a criminal history background check in compliance with the procedures established by Division of Criminal Justice Services and submission of the applicable fee. Criminal history background checks must be done through Identogo at http://www.identogo.com/FP/NewYork.aspx using the ORI number NY0412500 and the Fingerprint Reason "Control Substance License."

6. Has this person or entity held any position of management or ownership during the preceding ten years of a 10% or greater interest in any other business which manufactured or distributed drugs? ☐ Yes ☒ No

If the answer to this question is yes, provide the name of the business, a statement defining the position of management or ownership held in such business, and any finding of violations of law or regulation by a governmental agency against the business or person or entity.

NEW YORK STATE | Department of Health

Medical Marijuana Program
Application for Registration as a Registered Organization

Appendix A:
Affidavit for Board Members, Officers, Managers, Owners, Partners, Principal Stakeholders, Directors, and Members

7. Has this person or entity been convicted of a felony or had any type of registration or license suspended or revoked in any administrative or judicial proceeding?
☐ Yes ☒ No

If the answer to either of these questions is "Yes," a statement explaining the circumstances of the felony, suspension or revocation must be provided below.

8. Phone: [redacted]		9. Fax: [redacted]	
10. Email: [redacted]			
11. Residence Address: [redacted]			
12. City: [redacted]	13. State: [redacted]	14. ZIP Code: [redacted]	

15. Formal Education		Dates Attended		Degree	
Institution	Address	From	To	Degree Received	Date Received
Ithaca College	953 Danby Rd Ithaca NY 14850	9/81	5/85	BS	5/85
RPI	2144 Burdett Ave Troy NY	91	93	MBA	93

Appendix A:
Affidavit for Board Members, Officers, Managers, Owners, Partners, Principal Stakeholders, Directors, and Members

16. Licenses Held: List any and all licenses issued by a governmental or other regulatory entity.

Type of Professional License	License Number	Institution Granting License (Mailing Address, Phone, Email)	Effective Date	Expiration Date

17. Employment History for the Past 10 Years: Start with MOST RECENT employment and include employment during the last 10 years. Attach additional copies of page 3, if necessary.

Redacted pursuant to N.Y. Public Officers Law, Art.6

Name of Employer:
Type of Business:

Appendix A:
Affidavit for Board Members, Officers, Managers, Owners, Partners, Principal Stakeholders, Directors, and Members

Street Address:		
City:	State:	Zip Code:
Starting Date of Employment:	Ending Date of Employment:	
Name of Supervisor for Reference:	Supervisor Phone Number:	
Position/Responsibilities:		
Reason For Departure:		
Name of Employer:		
Type of Business:		
Street Address:		
City:	State:	Zip Code:
Starting Date of Employment:	Ending Date of Employment:	
Name of Supervisor for Reference:	Supervisor Phone Number:	
Position/Responsibilities:		
Reason For Departure:		
Name of Employer:		
Type of Business:		
Street Address:		
City:	State:	Zip Code:
Starting Date of Employment:	Ending Date of Employment:	
Name of Supervisor for Reference:	Supervisor Phone Number:	
Position/Responsibilities:		
Reason For Departure:		
Name of Employer:		

NEW YORK STATE | Department of Health

Medical Marijuana Program
Application for Registration as a Registered Organization

Appendix A:
Affidavit for Board Members, Officers, Managers, Owners, Partners, Principal Stakeholders, Directors, and Members

Type of Business:		
Street Address:		
City:	State:	Zip Code:
Starting Date of Employment:	Ending Date of Employment:	
Name of Supervisor for Reference:	Supervisor Phone Number:	
Position/Responsibilities:		
Reason For Departure:		
Name of Employer:	Type of Business:	
Street Address:		
City:	State:	Zip Code:
Starting Date of Employment:	Ending Date of Employment:	
Name of Supervisor for Reference:	Supervisor Phone Number:	
Position/Responsibilities:		
Reason For Departure:		

16. Offices Held or Ownership Interest in Other Businesses

List any affiliations you have been associated with in the past 10 years. Affiliation, for the purpose of this section, includes serving as either a board member, officer, manager, owner, partner, principal stakeholder, director or member of the organization. Organizations outside of New York State must also be disclosed.

Have you owned or operated a business or had any affiliations with the operations of a business in New York, in the USA, or in other countries? ☒ Yes ☐ No [redacted]

From:	Name and Address of Business:	
To:		
Business Type:	Office Held/Nature of Interest:	☐ open ☐ closed ☐ proposed
Name, Address and Phone Number of Licensing/Regulatory Agency, if applicable:		

Appendix A:
Affidavit for Board Members, Officers, Managers, Owners, Partners, Principal Stakeholders, Directors, and Members

From:	Name and Address of Business:	
To:		
Business Type:	Office Held/Nature of Interest:	☐open ☐closed ☐proposed
Name, Address and Phone Number of Licensing/Regulatory Agency, if applicable:		
From:	Name and Address of Business:	
To:		
Business Type:	Office Held/Nature of Interest:	☐open ☐closed ☐proposed
Name, Address and Phone Number of Licensing/Regulatory Agency, if applicable:		
From:	Name and Address of Business:	
To:		
Business Type:	Office Held/Nature of Interest:	☐open ☐closed ☐proposed
Name, Address and Phone Number of Licensing/Regulatory Agency, if applicable:		

Appendix A:
Affidavit for Board Members, Officers, Managers, Owners, Partners, Principal Stakeholders, Directors, and Members

19. Affirmative Statement of Qualifications

For individuals who have not previously served as a director/officer nor have had managerial experience, please include a statement below explaining how you are qualified to operate the proposed facility. This statement should include, but not be limited to, any relevant community/volunteer background and experience.

As indicated above, I have professional business experience that will allow me to support the successful development and operation of Citiva Medical LLC. I will bring a perspective of general business operation that I believe will complement the experience of the management team, which has the expertise in the medical marihuana industry and ancillary program elements. Although I will not be involved in day-to-day operations, I will be available as a resource to the management team, and believe that my specific capabilities will make the Citiva team a well-balanced organization.

20. The undersigned certifies, under penalty of perjury, that the information contained herein or attached hereto is accurate, true, and complete in all material respects.

Signature:	Date: 06/03/2015
Notary Name:	Notary Registration Number: 01MO6002017
Notary (Notary Must Affix Stamp or Seal) CHARLENE A. MOORE NOTARY PUBLIC, STATE OF NEW YORK QUALIFIED IN ALBANY COUNTY NO. 01MO6002017 COMMISSION EXPIRES MARCH 22, 2018	Date: 6/3/15

NEW YORK STATE | Department of Health

Medical Marijuana Program
Application for Registration as a Registered Organization

Appendix A:
Affidavit for Board Members, Officers, Managers, Owners, Partners, Principal Stakeholders, Directors, and Members

Appendix A **must** be completed for all board members, officers, managers, owners, partners, principal stakeholders, directors, and members. For board members, officers, managers, owners, partners, directors, and members of the applicant that are not natural persons, Appendix A must be completed by each board member, officer, manager, owner, partner, director and member of that entity, going back to the level of ownership by a natural person. **An Organizational Chart documenting your organizational structure must be included with this application.**

1. Business Name: Citiva Medical LLC

This is the name that was entered in Section A of the Application for Registration as a Registered Organization.

2. Name [redacted] | 3. Title: Member

4. Briefly describe the role of this person or entity in the proposed registered organization:

Although I will not have an active role in the day-to-day operations, I will provide support and advice to the management team, based on my business experience.

5. Will this person or entity come into contact with medical marijuana or medical marijuana products?
☐ Yes ☑ No

Any managers who may come in contact with or handle medical marijuana, including medical marijuana products, shall be subject to a fingerprinting process as part of a criminal history background check in compliance with the procedures established by Division of Criminal Justice Services and submission of the applicable fee. Criminal history background checks must be done through Identogo at http://www.identogo.com/FPNewYork.aspx using the ORI number NY0412500 and the Fingerprint Reason "Control Substance License."

6. Has this person or entity held any position of management or ownership during the preceding ten years of a 10% or greater interest in any other business which manufactured or distributed drugs? ☐ Yes ☑ No

If the answer to this question is yes, provide the name of the business, a statement defining the position of management or ownership held in such business, and any finding of violations of law or regulation by a governmental agency against the business or person or entity.

Appendix A:
Affidavit for Board Members, Officers, Managers, Owners, Partners, Principal Stakeholders, Directors, and Members

7. Has this person or entity been convicted of a felony or had any type of registration or license suspended or revoked in any administrative or judicial proceeding?
☐ Yes ☑ No

If the answer to either of these questions is "Yes," a statement explaining the circumstances of the felony, suspension or revocation must be provided below.

8. Phone: [redacted]		9. Fax [redacted]	
10. Email: [redacted]			
11. Residence Address: [redacted]			
12. City: [redacted]	13. State [redacted]	14. ZIP Code: [redacted]	

15. Formal Education		Dates Attended		Degree	
Institution	Address	From	To	Degree Received	Date Received
Villanova University	800 E. Lancaster Ave. Villanova PA 19085	9/1987	6/1991	B.S. Business Administration	9/1991
St. Joseph's University	5600 City Ave Philadelphia PA	9/2004	5/2009	Exec. MBA Food Marketing	5/2009

Appendix A:
Affidavit for Board Members, Officers, Managers, Owners, Partners, Principal Stakeholders, Directors, and Members

16. Licenses Held: List any and all licenses issued by a governmental or other regulatory entity.

Type of Professional License	License Number	Institution Granting License (Mailing Address, Phone, Email)	Effective Date	Expiration Date

17. Employment History for the Past 10 Years: Start with MOST RECENT employment and include employment during the last 10 years. Attach additional copies of page 3. if necessary.

Redacted pursuant to N.Y. Public Officers Law, Art.6

Name of Employer:

Type of Business:

Appendix A:
Affidavit for Board Members, Officers, Managers, Owners, Partners, Principal Stakeholders, Directors, and Members

Street Address:		
City:	State:	Zip Code:
Starting Date of Employment:	Ending Date of Employment:	
Name of Supervisor for Reference:	Supervisor Phone Number:	
Position/Responsibilities:		
Reason For Departure:		
Name of Employer:		
Type of Business:		
Street Address:		
City:	State:	Zip Code:
Starting Date of Employment:	Ending Date of Employment:	
Name of Supervisor for Reference:	Supervisor Phone Number:	
Position/Responsibilities:		
Reason For Departure:		
Name of Employer:		
Type of Business:		
Street Address:		
City:	State:	Zip Code:
Starting Date of Employment:	Ending Date of Employment:	
Name of Supervisor for Reference:	Supervisor Phone Number:	
Position/Responsibilities:		
Reason For Departure:		
Name of Employer:		

Appendix A:
Affidavit for Board Members, Officers, Managers, Owners, Partners, Principal Stakeholders, Directors, and Members

Type of Business:		
Street Address:		
City:	State:	Zip Code:
Starting Date of Employment:	Ending Date of Employment:	
Name of Supervisor for Reference:	Supervisor Phone Number:	
Position/Responsibilities:		
Reason For Departure:		
Name of Employer:	Type of Business:	
Street Address:		
City:	State:	Zip Code:
Starting Date of Employment:	Ending Date of Employment:	
Name of Supervisor for Reference:	Supervisor Phone Number:	
Position/Responsibilities:		
Reason For Departure:		

18. Offices Held or Ownership Interest in Other Businesses

List any affiliations you have been associated with in the past 10 years. Affiliation, for the purpose of this section, includes serving as either a board member, officer, manager, owner, partner, principal stakeholder, director or member of the organization. Organizations outside of New York State must also be disclosed.

Have you owned or operated a business or had any affiliations with the operations of a business in New York, in the USA, or in other countries? ☑ Yes ☐ No

From: 8/15/1996 To: 7/31/2012	Name and Address of Business: Kozy Shack Enterprises 83 Lucy St Hicksville NY 11801	
Business Type: Food Industry	Office Held/Nature of Interest: Board member	☑ open ☐ closed ☐ proposed
Name, Address and Phone Number of Licensing/Regulatory Agency, if applicable:		

Appendix A:
Affidavit for Board Members, Officers, Managers, Owners, Partners, Principal Stakeholders, Directors, and Members

From: 7/31/2012 To: Present	Name and Address of Business: V.G. Enterprises Management Group 110 south AVE Suite 11 S.I. NY 10314	
Business Type: Management Company	Office Held/Nature of Interest: Member's	☑ open ☐ closed ☐ proposed
Name, Address and Phone Number of Licensing/Regulatory Agency, if applicable:		
From: 7/31/2012 To: Present	Name and Address of Business: Capital Blvd Group V.G. Enterprises, Management Group 110 south AVE Suite D S.I. NY 10314	
Business Type: Investment Company	Office Held/Nature of Interest: member	☑ open ☐ closed ☐ proposed
Name, Address and Phone Number of Licensing/Regulatory Agency, if applicable.		
From: To:	Name and Address of Business:	
Business Type:	Office Held/Nature of Interest:	☐ open ☐ closed ☐ proposed
Name, Address and Phone Number of Licensing/Regulatory Agency, if applicable:		

Appendix A:
Affidavit for Board Members, Officers, Managers, Owners, Partners, Principal Stakeholders, Directors, and Members

19. Affirmative Statement of Qualifications

For individuals who have not previously served as a director/officer nor have had managerial experience, please include a statement below explaining how you are qualified to operate the proposed facility. This statement should include, but not be limited to, any relevant community/volunteer background and experience.

As indicated above, I have professional business experience that will allow me to support the successful development and operation of Citiva Medical LLC. I will bring a perspective of general business operation that I believe will complement the experience of the management team, which has the expertise in the medical marihuana industry and ancillary program elements. Although I will not be involved in day-to-day operations, I will be available as a resource to the management team, and believe that my specific capabilities will make the Citiva team a well-balanced organization.

20. The undersigned certifies, under penalty of perjury, that the information contained herein or attached hereto is accurate, true, and complete in all material respects.

Signature: [signature]	Date: 6/2/2015
Notary Name: [signature]	Notary Registration Number: 01PH6289923
Notary (Notary Must Affix Stamp or Seal)	Date: 6/2/15

FAITH PHILIPSON
Notary Public, State of New York
No. 01PH6289923
Qualified in Richmond County
Commission Expires 09/30/17

Appendix A:
Affidavit for Board Members, Officers, Managers, Owners, Partners, Principal Stakeholders, Directors, and Members

Appendix A **must** be completed for all board members, officers, managers, owners, partners, principal stakeholders, directors, and members. For board members, officers, managers, owners, partners, directors, and members of the applicant that are not natural persons, Appendix A must be completed by each board member, officer, manager, owner, partner, director and member of that entity, going back to the level of ownership by a natural person. **An Organizational Chart documenting your organizational structure must be included with this application.**

1. Business Name: Citiva Medical LLC

This is the name that was entered in Section A of the Application for Registration as a Registered Organization.

Name: Julia Boland [redacted] 3. Title:

4. Briefly describe the role of this person or entity in the proposed registered organization:

My trust is a member of VG Capital that owns shares in VG Citiva Medical holding,LLC witch hold shares in Citiva medical LLC.

5. Will this person or entity come into contact with medical marijuana or medical marijuana products?
☐ **Yes** ☑ **No**

Any managers who may come in contact with or handle medical marijuana, including medical marijuana products, shall be subject to a fingerprinting process as part of a criminal history background check in compliance with the procedures established by Division of Criminal Justice Services and submission of the applicable fee. Criminal history background checks must be done through Identogo at http://www.identogo.com/FP/NewYork.aspx using the ORI number NY0412500 and the Fingerprint Reason "Control Substance License."

6. Has this person or entity held any position of management or ownership during the preceding ten years of a 10% or greater interest in any other business which manufactured or distributed drugs? ☐ **Yes** ☑ **No**

If the answer to this question is yes, provide the name of the business, a statement defining the position of management or ownership held in such business, and any finding of violations of law or regulation by a governmental agency against the business or person or entity.

Appendix A:
Affidavit for Board Members, Officers, Managers, Owners, Partners, Principal Stakeholders, Directors, and Members

7. Has this person or entity been convicted of a felony or had any type of registration or license suspended or revoked in any administrative or judicial proceeding?
☐ Yes ☑ No

If the answer to either of these questions is "Yes," a statement explaining the circumstances of the felony, suspension or revocation must be provided below.

8. Phone: [redacted]	9. Fax:
10. Email: [redacted]	
11. Residence Address: [redacted]	
12. City: [redacted]	13. State: [redacted] 14. ZIP Code: [redacted]

15. Formal Education		Dates Attended		Degree	
Institution	Address	From	To	Degree Received	Date Received

Appendix A:
Affidavit for Board Members, Officers, Managers, Owners, Partners, Principal Stakeholders, Directors, and Members

16. Licenses Held: List any and all licenses issued by a governmental or other regulatory entity.

Type of Professional License	License Number	Institution Granting License (Mailing Address, Phone, Email)	Effective Date	Expiration Date

17. Employment History for the Past 10 Years: Start with MOST RECENT employment and include employment during the last 10 years. Attach additional copies of page 3, if necessary.

Name of Employer:		
Type of Business:		
Street Address:		
City:	State:	Zip Code:
Starting Date of Employment:	Ending Date of Employment:	
Name of Supervisor for Reference:	Supervisor Phone Number:	
Position/Responsibilities:		
Reason For Departure:		
Name of Employer:		
Type of Business:		

Appendix A:
Affidavit for Board Members, Officers, Managers, Owners, Partners, Principal Stakeholders, Directors, and Members

Street Address:		
City:	State:	Zip Code:
Starting Date of Employment:	Ending Date of Employment:	
Name of Supervisor for Reference:	Supervisor Phone Number:	
Position/Responsibilities:		
Reason For Departure:		
Name of Employer:		
Type of Business:		
Street Address:		
City:	State:	Zip Code:
Starting Date of Employment:	Ending Date of Employment:	
Name of Supervisor for Reference:	Supervisor Phone Number:	
Position/Responsibilities:		
Reason For Departure:		
Name of Employer:		
Type of Business:		
Street Address:		
City:	State:	Zip Code:
Starting Date of Employment:	Ending Date of Employment:	
Name of Supervisor for Reference:	Supervisor Phone Number:	
Position/Responsibilities:		
Reason For Departure:		
Name of Employer:		

Appendix A:
Affidavit for Board Members, Officers, Managers, Owners, Partners, Principal Stakeholders, Directors, and Members

Type of Business:		
Street Address:		
City:	State:	Zip Code:
Starting Date of Employment:	Ending Date of Employment:	
Name of Supervisor for Reference:	Supervisor Phone Number:	
Position/Responsibilities:		
Reason For Departure:		
Name of Employer:	Type of Business:	
Street Address:		
City:	State:	Zip Code:
Starting Date of Employment:	Ending Date of Employment:	
Name of Supervisor for Reference:	Supervisor Phone Number:	
Position/Responsibilities:		
Reason For Departure:		

18. Offices Held or Ownership Interest in Other Businesses

List any affiliations you have been associated with in the past 10 years. Affiliation, for the purpose of this section, includes serving as either a board member, officer, manager, owner, partner, principal stakeholder, director or member of the organization. Organizations outside of New York State must also be disclosed.

Have you owned or operated a business or had any affiliations with the operations of a business in New York, in the USA, or in other countries? ☐ **Yes** ☑ **No**

From:	Name and Address of Business:	
To:		
Business Type:	Office Held/Nature of Interest:	☐ **open** ☐ **closed** ☐ **proposed**
Name, Address and Phone Number of Licensing/Regulatory Agency, if applicable:		

Appendix A:
Affidavit for Board Members, Officers, Managers, Owners, Partners, Principal Stakeholders, Directors, and Members

From:	Name and Address of Business:	
To:		
Business Type:	Office Held/Nature of Interest:	☐ open ☐ closed ☐ proposed
Name, Address and Phone Number of Licensing/Regulatory Agency, if applicable:		

From:	Name and Address of Business:	
To:		
Business Type:	Office Held/Nature of Interest:	☐ open ☐ closed ☐ proposed
Name, Address and Phone Number of Licensing/Regulatory Agency, if applicable:		

From:	Name and Address of Business:	
To:		
Business Type:	Office Held/Nature of Interest:	☐ open ☐ closed ☐ proposed
Name, Address and Phone Number of Licensing/Regulatory Agency, if applicable:		

Appendix A:
Affidavit for Board Members, Officers, Managers, Owners, Partners, Principal Stakeholders, Directors, and Members

19. Affirmative Statement of Qualifications

For individuals who have not previously served as a director/officer nor have had managerial experience, please include a statement below explaining how you are qualified to operate the proposed facility. This statement should include, but not be limited to, any relevant community/volunteer background and experience.

20. The undersigned certifies, under penalty of perjury, that the information contained herein or attached hereto is accurate, true, and complete in all material respects.

Signature: Joanne Caridi Trustee	Date: 6/2/15
Notary Name: [signature]	Notary Registration Number: 01PH6289923
Notary (Notary Must Affix Stamp or Seal)	Date: 6/2/15

FAITH PHILIPSON
Notary Public, State of New York
No. 01PH6289923
Qualified in Richmond County
Commission Expires 09/30/17

Appendix A:
Affidavit for Board Members, Officers, Managers, Owners, Partners, Principal Stakeholders, Directors, and Members

Appendix A **must** be completed for all board members, officers, managers, owners, partners, principal stakeholders, directors, and members. For board members, officers, managers, owners, partners, directors, and members of the applicant that are not natural persons, Appendix A must be completed by each board member, officer, manager, owner, partner, director and member of that entity, going back to the level of ownership by a natural person. **An Organizational Chart documenting your organizational structure must be included with this application.**

1. Business Name: Citiva Medical LLC

This is the name that was entered in Section A of the Application for Registration as a Registered Organization.

2. Name: Brandon Candi

4. Briefly describe the role of this person or entity in the proposed registered organization:

My trust is a member of VG Capital that owns shares in VG Citiva Medical holding,LLC witch hold shares in Citiva medical LLC.

5. Will this person or entity come into contact with medical marijuana or medical marijuana products?
☐ **Yes** ☑ **No**

Any managers who may come in contact with or handle medical marijuana, including medical marijuana products, shall be subject to a fingerprinting process as part of a criminal history background check in compliance with the procedures established by Division of Criminal Justice Services and submission of the applicable fee. Criminal history background checks must be done through Identogo at http://www.identogo.com/FP/NewYork.aspx using the ORI number NY0412500 and the Fingerprint Reason "Control Substance License."

6. Has this person or entity held any position of management or ownership during the preceding ten years of a 10% or greater interest in any other business which manufactured or distributed drugs? ☐ **Yes** ☑ **No**

If the answer to this question is yes, provide the name of the business, a statement defining the position of management or ownership held in such business, and any finding of violations of law or regulation by a governmental agency against the business or person or entity.

Appendix A:
Affidavit for Board Members, Officers, Managers, Owners, Partners, Principal Stakeholders, Directors, and Members

7. Has this person or entity been convicted of a felony or had any type of registration or license suspended or revoked in any administrative or judicial proceeding?
☐ Yes ☑ No

If the answer to either of these questions is "Yes," a statement explaining the circumstances of the felony, suspension or revocation must be provided below.

8. Phone: [redacted]	9. Fax:
10. Email: [redacted]	
11. Residence Address: [redacted]	
12. City: [redacted]	13. State: [redacted] 14. ZIP Code: [redacted]

15. Formal Education		Dates Attended		Degree	
Institution	Address	From	To	Degree Received	Date Received

Appendix A:
Affidavit for Board Members, Officers, Managers, Owners, Partners, Principal Stakeholders, Directors, and Members

16. Licenses Held: List any and all licenses issued by a governmental or other regulatory entity.

Type of Professional License	License Number	Institution Granting License (Mailing Address, Phone, Email)	Effective Date	Expiration Date

17. Employment History for the Past 10 Years: Start with MOST RECENT employment and include employment during the last 10 years. Attach additional copies of page 3, if necessary.

Name of Employer:		
Type of Business:		
Street Address:		
City:	State:	Zip Code:
Starting Date of Employment:	Ending Date of Employment:	
Name of Supervisor for Reference:	Supervisor Phone Number:	
Position/Responsibilities:		
Reason For Departure:		
Name of Employer:		
Type of Business:		

Appendix A:
Affidavit for Board Members, Officers, Managers, Owners, Partners, Principal Stakeholders, Directors, and Members

Street Address:		
City:	State:	Zip Code:
Starting Date of Employment:	Ending Date of Employment:	
Name of Supervisor for Reference:	Supervisor Phone Number:	
Position/Responsibilities:		
Reason For Departure:		
Name of Employer:		
Type of Business:		
Street Address:		
City:	State:	Zip Code:
Starting Date of Employment:	Ending Date of Employment:	
Name of Supervisor for Reference:	Supervisor Phone Number:	
Position/Responsibilities:		
Reason For Departure:		
Name of Employer:		
Type of Business:		
Street Address:		
City:	State:	Zip Code:
Starting Date of Employment:	Ending Date of Employment:	
Name of Supervisor for Reference:	Supervisor Phone Number:	
Position/Responsibilities:		
Reason For Departure:		
Name of Employer:		

Appendix A:
Affidavit for Board Members, Officers, Managers, Owners, Partners, Principal Stakeholders, Directors, and Members

Type of Business:		
Street Address:		
City:	State:	Zip Code:
Starting Date of Employment:	Ending Date of Employment:	
Name of Supervisor for Reference:	Supervisor Phone Number:	
Position/Responsibilities:		
Reason For Departure:		
Name of Employer:	Type of Business:	
Street Address:		
City:	State:	Zip Code:
Starting Date of Employment:	Ending Date of Employment:	
Name of Supervisor for Reference:	Supervisor Phone Number:	
Position/Responsibilities:		
Reason For Departure:		

18. Offices Held or Ownership Interest in Other Businesses

List any affiliations you have been associated with in the past 10 years. Affiliation, for the purpose of this section, includes serving as either a board member, officer, manager, owner, partner, principal stakeholder, director or member of the organization. Organizations outside of New York State must also be disclosed.

Have you owned or operated a business or had any affiliations with the operations of a business in New York, in the USA, or in other countries? ☐ **Yes** ☑ **No**

From:	Name and Address of Business:	
To:		
Business Type:	Office Held/Nature of Interest:	☐ **open** ☐ **closed** ☐ **proposed**
Name, Address and Phone Number of Licensing/Regulatory Agency, if applicable:		

Appendix A:
Affidavit for Board Members, Officers, Managers, Owners, Partners, Principal Stakeholders, Directors, and Members

From:	Name and Address of Business:	
To:		
Business Type:	Office Held/Nature of Interest:	☐ open ☐ closed ☐ proposed
Name, Address and Phone Number of Licensing/Regulatory Agency, if applicable:		

From:	Name and Address of Business:	
To:		
Business Type:	Office Held/Nature of Interest:	☐ open ☐ closed ☐ proposed
Name, Address and Phone Number of Licensing/Regulatory Agency, if applicable:		

From:	Name and Address of Business:	
To:		
Business Type:	Office Held/Nature of Interest:	☐ open ☐ closed ☐ proposed
Name, Address and Phone Number of Licensing/Regulatory Agency, if applicable:		

Appendix A:
Affidavit for Board Members, Officers, Managers, Owners, Partners, Principal Stakeholders, Directors, and Members

19. Affirmative Statement of Qualifications

For individuals who have not previously served as a director/officer nor have had managerial experience, please include a statement below explaining how you are qualified to operate the proposed facility. This statement should include, but not be limited to, any relevant community/volunteer background and experience.

20. The undersigned certifies, under penalty of perjury, that the information contained herein or attached hereto is accurate, true, and complete in all material respects.

Signature: Joanne Caridi Trustee	Date: 6/2/15
Notary Name: [signature]	Notary Registration Number: 01PH6289923
Notary (Notary Must Affix Stamp or Seal)	Date: 6/2/15

FAITH PHILIPSON
Notary Public, State of New York
No. 01PH6289923
Qualified in Richmond County
Commission Expires 09/30/17

Appendix A:
Affidavit for Board Members, Officers, Managers, Owners, Partners, Principal Stakeholders, Directors, and Members

Appendix A **must** be completed for all board members, officers, managers, owners, partners, principal stakeholders, directors, and members. For board members, officers, managers, owners, partners, directors, and members of the applicant that are not natural persons, Appendix A must be completed by each board member, officer, manager, owner, partner, director and member of that entity, going back to the level of ownership by a natural person. **An Organizational Chart documenting your organizational structure must be included with this application.**

1. Business Name: Citiva Medical LLC

This is the name that was entered in Section A of the Application for Registration as a Registered Organization.

2. Name: [redacted] | 3. Title: Member

4. Briefly describe the role of this person or entity in the proposed registered organization:
Although I will not have an active role in the day-to-day operations, I will provide support and advice to the management team, based on my business experience.

5. Will this person or entity come into contact with medical marijuana or medical marijuana products?
☐ Yes ☑ No

Any managers who may come in contact with or handle medical marijuana, including medical marijuana products, shall be subject to a fingerprinting process as part of a criminal history background check in compliance with the procedures established by Division of Criminal Justice Services and submission of the applicable fee. Criminal history background checks must be done through Identogo at [redacted] using the ORI number NY0412500 and the Fingerprint Reason "Control Substance License."

6. Has this person or entity held any position of management or ownership during the preceding ten years of a 10% or greater interest in any other business which manufactured or distributed drugs? ☐ Yes ☑ No

If the answer to this question is yes, provide the name of the business, a statement defining the position of management or ownership held in such business, and any finding of violations of law or regulation by a governmental agency against the business or person or entity.

Appendix A:
Affidavit for Board Members, Officers, Managers, Owners, Partners, Principal Stakeholders, Directors, and Members

7. Has this person or entity been convicted of a felony or had any type of registration or license suspended or revoked in any administrative or judicial proceeding?
☐ Yes ☐ No

If the answer to either of these questions is "Yes," a statement explaining the circumstances of the felony, suspension or revocation must be provided below.

8. Phone: [redacted]	9. Fax [redacted]
10. Email: [redacted]	
11. Residence Address: [redacted]	
12. City: [redacted]	13. State: [redacted] 14. ZIP Code [redacted]

15. Formal Education		Dates Attended		Degree	
Institution	Address	From	To	Degree Received	Date Received
St. John's University	300 Howard Ave. S.I. NY 10301	9/1982	6/1986	Bachelor of Science marketing	6/1986

Appendix A:
Affidavit for Board Members, Officers, Managers, Owners, Partners, Principal Stakeholders, Directors, and Members

16. Licenses Held: List any and all licenses issued by a governmental or other regulatory entity.

Type of Professional License	License Number	Institution Granting License (Mailing Address, Phone, Email)	Effective Date	Expiration Date

17. Employment History for the Past 10 Years: Start with MOST RECENT employment and include employment during the last 10 years. Attach additional copies of page 3, if necessary.

Redacted pursuant to N.Y. Public Officers Law, Art.6

Appendix A:
Affidavit for Board Members, Officers, Managers, Owners, Partners, Principal Stakeholders, Directors, and Members

Street Address:		
City:	State:	Zip Code:
Starting Date of Employment:	Ending Date of Employment:	
Name of Supervisor for Reference:	Supervisor Phone Number:	
Position/Responsibilities:		
Reason For Departure:		
Name of Employer:		
Type of Business:		
Street Address:		
City:	State:	Zip Code:
Starting Date of Employment:	Ending Date of Employment:	
Name of Supervisor for Reference:	Supervisor Phone Number:	
Position/Responsibilities:		
Reason For Departure:		
Name of Employer:		
Type of Business:		
Street Address:		
City:	State:	Zip Code:
Starting Date of Employment:	Ending Date of Employment:	
Name of Supervisor for Reference:	Supervisor Phone Number:	
Position/Responsibilities:		
Reason For Departure:		
Name of Employer:		

Appendix A:
Affidavit for Board Members, Officers, Managers, Owners, Partners, Principal Stakeholders, Directors, and Members

Type of Business:		
Street Address:		
City:	State:	Zip Code:
Starting Date of Employment:	Ending Date of Employment:	
Name of Supervisor for Reference:	Supervisor Phone Number:	
Position/Responsibilities:		
Reason For Departure:		
Name of Employer:	Type of Business:	
Street Address:		
City:	State:	Zip Code:
Starting Date of Employment:	Ending Date of Employment:	
Name of Supervisor for Reference:	Supervisor Phone Number:	
Position/Responsibilities:		
Reason For Departure:		

18. Offices Held or Ownership Interest in Other Businesses

List any affiliations you have been associated with in the past 10 years. Affiliation, for the purpose of this section, includes serving as either a board member, officer, manager, owner, partner, principal stakeholder, director or member of the organization. Organizations outside of New York State must also be disclosed.

Have you owned or operated a business or had any affiliations with the operations of a business in New York, in the USA, or in other countries? ☑ **Yes** ☐ **No**

From: 6-1-1986	Name and Address of Business: Krazy Shack Enterprises 83 Ludlow St Hicksville NY 11801	
To: 7/31/2012		
Business Type: Food industry	Office Held/Nature of Interest: officer	☑ **open** ☐ **closed** ☐ **proposed**
Name, Address and Phone Number of Licensing/Regulatory Agency, if applicable:		

Appendix A:
Affidavit for Board Members, Officers, Managers, Owners, Partners, Principal Stakeholders, Directors, and Members

From: 7/31/2012 To: Present	Name and Address of Business: VG Enterprises Management Group 110 South AVE Suite 17 Staten Island NY 10314	
Business Type: Management Company	Office Held/Nature of Interest: member	☑ open ☐ closed ☐ proposed
Name, Address and Phone Number of Licensing/Regulatory Agency, if applicable:		
From: 7/31/2012 To: Present	Name and Address of Business: V.G. ~~Enterprises~~ Capital Group LLC 110 South AVE Suite 17 Staten Island NY 10314	
Business Type: Investment company	Office Held/Nature of Interest: Member	☑ open ☐ closed ☐ proposed
Name, Address and Phone Number of Licensing/Regulatory Agency, if applicable:		
From: To:	Name and Address of Business:	
Business Type:	Office Held/Nature of Interest:	☐ open ☐ closed ☐ proposed
Name, Address and Phone Number of Licensing/Regulatory Agency, if applicable:		

Appendix A:
Affidavit for Board Members, Officers, Managers, Owners, Partners, Principal Stakeholders, Directors, and Members

19. Affirmative Statement of Qualifications

For individuals who have not previously served as a director/officer nor have had managerial experience, please include a statement below explaining how you are qualified to operate the proposed facility. This statement should include, but not be limited to, any relevant community/volunteer background and experience.

As indicated above, I have professional business experience that will allow me to support the successful development and operation of Citiva Medical LLC. I will bring a perspective of general business operation that I believe will complement the experience of the management team, which has the expertise in the medical marihuana industry and ancillary program elements. Although I will not be involved in day-to-day operations, I will be available as a resource to the management team, and believe that my specific capabilities will make the Citiva team a well-balanced organization.

20. The undersigned certifies, under penalty of perjury, that the information contained herein or attached hereto is accurate, true, and complete in all material respects.

Signature: Joanne Caridi	Date: 6/2/15
Notary Name: Faith Philipson	Notary Registration Number: 01PH6289923
Notary (Notary Must Affix Stamp or Seal)	Date: 6/2/15

FAITH PHILIPSON
Notary Public, State of New York
No. 01PH6289923
Qualified in Richmond County
Commission Expires 09/30/17

NEW YORK STATE | Department of Health

Medical Marijuana Program
Application for Registration as
a Registered Organization

Appendix A:
Affidavit for Board Members, Officers, Managers, Owners, Partners, Principal Stakeholders, Directors, and Members

Appendix A **must** be completed for all board members, officers, managers, owners, partners, principal stakeholders, directors, and members. For board members, officers, managers, owners, partners, directors, and members of the applicant that are not natural persons, Appendix A must be completed by each board member, officer, manager, owner, partner, director and member of that entity, going back to the level of ownership by a natural person. **An Organizational Chart documenting your organizational structure must be included with this application.**

1. Business Name: Citiva Medical LLC

This is the name that was entered in Section A of the Application for Registration as a Registered Organization.

2 Name: Kathleen Candi

3 Title: Family Nurse Practitioner / Member

4. Briefly describe the role of this person or entity in the proposed registered organization:

Please refer to attached biography, which responds to this item (see paragraphs 3 and 4 of the biography)

5. Will this person or entity come into contact with medical marijuana or medical marijuana products?
☐ Yes ☑ No

Any managers who may come in contact with or handle medical marijuana, including medical marijuana products, shall be subject to a fingerprinting process as part of a criminal history background check in compliance with the procedures established by Division of Criminal Justice Services and submission of the applicable fee. Criminal history background checks must be done through Identogo at http://www.identogo.com/FP/NewYork.aspx using the ORI number NY0412500 and the Fingerprint Reason "Control Substance License."

6. Has this person or entity held any position of management or ownership during the preceding ten years of a 10% or greater interest in any other business which manufactured or distributed drugs? ☐ Yes ☑ No

If the answer to this question is yes, provide the name of the business, a statement defining the position of management or ownership held in such business, and any finding of violations of law or regulation by a governmental agency against the business or person or entity.

Appendix A:
Affidavit for Board Members, Officers, Managers, Owners, Partners, Principal Stakeholders, Directors, and Members

7. Has this person or entity been convicted of a felony or had any type of registration or license suspended or revoked in any administrative or judicial proceeding?
☐ Yes ☑ No

If the answer to either of these questions is "Yes," a statement explaining the circumstances of the felony, suspension or revocation must be provided below.

8. Phone: [redacted]	9. Fax:	
10. Email: [redacted]		
11. Residence Address: [redacted]		
12. City: [redacted]	13. State [redacted]	14. ZIP Code: [redacted]

15. Formal Education		Dates Attended		Degree	
Institution	Address	From	To	Degree Received	Date Received
SUNY Downstate Medical Health Center	450 Clarkson Ave Bklyn, NY 11203	1994	1997	Masters of Nursing Family Nurse Practitioner	1/31/1997
Central Michinga University	1200 Franklin Street Mt. Pleasant, MI 48859	1991	1994	Masters Health Administration	12/1997
CUNY Hunter	695 Park Ave NYC, NY 10065	1978	1982	Bachelor of Nursing	6/1982

Appendix A:
Affidavit for Board Members, Officers, Managers, Owners, Partners, Principal Stakeholders, Directors, and Members

16. Licenses Held: List any and all licenses issued by a governmental or other regulatory entity.

Type of Professional License	License Number	Institution Granting License (Mailing Address, Phone, Email)	Effective Date	Expiration Date
Nurse Practitioner in Family Health	F331556-1	The University of the State of NY Education Department Office of Professionals		9/30/2016
Registered Professional Nurse	352871-1	89 Washington Ave Albany, NY 12234		9/30/2015
DEA license of NY	[redacted]	United States Department of Justice Drug Enforcement Administration	8/2/2013	8/31/2016
DEA license of NJ	[redacted]	8710 Morrissette Drive Springfield, VA 22152	7/5/2012	8/31/2015
Advanced Practice Nurse (APN) Registered Nurse	26NJ00122000 26NR12707100	State of NJ Office of Attorney General Division of Consumer Affairs Trenton, NJ 08625	6/1/2014	5/31/2016

17. Employment History for the Past 10 Years: Start with MOST RECENT employment and include employment during the last 10 years. Attach additional copies of page 3, if necessary.

Redacted pursuant to N.Y. Public Officers Law, Art.6

Appendix A:
Affidavit for Board Members, Officers, Managers, Owners, Partners, Principal Stakeholders, Directors, and Members

Redacted pursuant to N.Y. Public Officers Law, Art.6

Name of Employer:		
Type of Business:		
Street Address:		
City:	State:	Zip Code:
Starting Date of Employment:	Ending Date of Employment:	
Name of Supervisor for Reference:	Supervisor Phone Number:	
Position/Responsibilities:		
Reason For Departure:		
Name of Employer:		
Type of Business:		
Street Address:		
City:	State:	Zip Code:
Starting Date of Employment:	Ending Date of Employment:	
Name of Supervisor for Reference:	Supervisor Phone Number:	
Position/Responsibilities:		
Reason For Departure:		
Name of Employer:		

Appendix A:
Affidavit for Board Members, Officers, Managers, Owners, Partners, Principal Stakeholders, Directors, and Members

Type of Business:		
Street Address:		
City:	State:	Zip Code:
Starting Date of Employment:	Ending Date of Employment:	
Name of Supervisor for Reference:	Supervisor Phone Number:	
Position/Responsibilities:		
Reason For Departure:		
Name of Employer:	Type of Business:	
Street Address:		
City:	State:	Zip Code:
Starting Date of Employment:	Ending Date of Employment:	
Name of Supervisor for Reference:	Supervisor Phone Number:	
Position/Responsibilities:		
Reason For Departure:		

18. Offices Held or Ownership Interest in Other Businesses

List any affiliations you have been associated with in the past 10 years. Affiliation, for the purpose of this section, includes serving as either a board member, officer, manager, owner, partner, principal stakeholder, director or member of the organization. Organizations outside of New York State must also be disclosed.

Have you owned or operated a business or had any affiliations with the operations of a business in New York, in the USA, or in other countries? ☑ Yes ☐ No

Redacted pursuant to N.Y. Public Officers Law, Art.6

Appendix A:
Affidavit for Board Members, Officers, Managers, Owners, Partners, Principal Stakeholders, Directors, and Members

From:	Name and Address of Business:	
To:		
Business Type:	Office Held/Nature of Interest:	☐ open ☐ closed ☐ proposed
Name, Address and Phone Number of Licensing/Regulatory Agency, if applicable:		
From:	Name and Address of Business:	
To:		
Business Type:	Office Held/Nature of Interest:	☐ open ☐ closed ☐ proposed
Name, Address and Phone Number of Licensing/Regulatory Agency, if applicable:		
From:	Name and Address of Business:	
To:		
Business Type:	Office Held/Nature of Interest:	☐ open ☐ closed ☐ proposed
Name, Address and Phone Number of Licensing/Regulatory Agency, if applicable:		

Appendix A:
Affidavit for Board Members, Officers, Managers, Owners, Partners, Principal Stakeholders, Directors, and Members

19. Affirmative Statement of Qualifications

For individuals who have not previously served as a director/officer nor have had managerial experience, please include a statement below explaining how you are qualified to operate the proposed facility. This statement should include, but not be limited to, any relevant community/volunteer background and experience.

Please refer to my attached biography, which details my experience and capability to play an important role in the operation of the Registered Organization.

20. The undersigned certifies, under penalty of perjury, that the information contained herein or attached hereto is accurate, true, and complete in all material respects.

Signature: Kathleen Caridi	Date: 6/1/2015
Notary Name: Ruziye Kalender	Notary Registration Number: 01KA6265597
Notary (Notary Must Affix Stamp or Seal) Ruziye Kalender Notary Public-New York State No. 01KA6265597 Qualified in Richmond County My Comm. Expires 7/9/2016	Date: 6/1/2015

KATHLEEN CARIDI - PHYSICIAN AND INSTITUTIONAL LIASON

Kathleen Caridi RN, MSA, MSN, FNP is a certified nurse practitioner with more than 30 years of experience in a variety of medical fields ranging from management to direct patient care. Her experience is diverse and her dedication to patient advocacy empowers her to get things done. Her mission includes educating patients on the importance of taking control of their health and feeling their best every day.

Kathleen is currently the State Practice Manager for a national Retail Health Clinic. She is also currently a primary care provider for homebound patients. She has worked as a clinician, manager, clinical advisor, corporate speaker, medical legal consultant, educator and mentor for new graduates. She is a frequent lecturer in the medical community.

Kathleen brings her considerable expertise to Citiva Medical as a vital member of Citiva Medical's medical team. In that role she will assist in the company's efforts to provide the most advanced medical marijuana program in New York and assist New York physicians and institutions to obtain a better understanding of cannabinoid science and the clinical effects on the NYS approved conditions.

She has co-developed Citiva Medical's Medical Cannabis Compliance program to help medical professionals obtain access to the latest research, educational programs and requirements for providers in New York State to recommend medical cannabis.

Kathleen graduated from Hunter Bellevue School of Nursing. She continued her graduate education [redacted] graduating from Central Michigan University with a Masters in Health Administration. Reconnecting with her passion for direct patient care, Kathleen returned to SUNY Downstate Health Science Center to complete her Masters in Nursing and her Family Nurse Practitioner degree.

Appendix A:
Affidavit for Board Members, Officers, Managers, Owners, Partners, Principal Stakeholders, Directors, and Members

Appendix A must be completed for all board members, officers, managers, owners, partners, principal stakeholders, directors, and members. For board members, officers, managers, owners, partners, directors, and members of the applicant that are not natural persons, Appendix A must be completed by each board member, officer, manager, owner, partner, director and member of that entity, going back to the level of ownership by a natural person. An Organizational Chart documenting your organizational structure must be included with this application.

1. Business Name: Citiva Medical LLC

This is the name that was entered in Section A of the Application for Registration as a Registered Organization.

2. Name: Michael Caridi | 3. Title: Chief Operating Officer / Member

4. Briefly describe the role of this person or entity in the proposed registered organization:

As the Chief Operating Officer, I will play a direct role in the day-to-day operations of the organization, from a management perspective, and will also be involved in the development of strategic operational enhancements on an ongoing basis.

5. Will this person or entity come into contact with medical marijuana or medical marijuana products?

☐ Yes ☒ No

Any managers who may come in contact with or handle medical marijuana, including medical marijuana products, shall be subject to a fingerprinting process as part of a criminal history background check in compliance with the procedures established by Division of Criminal Justice Services and submission of the applicable fee. Criminal history background checks must be done through Identogo at http://www.identogo.com/FP/NewYork.aspx using the ORI number NY0412500 and the Fingerprint Reason "Control Substance License."

6. Has this person or entity held any position of management or ownership during the preceding t e a r s of a 10% or greater interest in any other business which manufactured or distributed drugs? ☐ Yes ☒ No

If the answer to this question is yes, provide the name of the business, a statement defining the position of management or ownership held in such business, and any finding of violations of law or regulation by a governmental agency against the business or person or entity.

Appendix A:
Affidavit for Board Members, Officers, Managers, Owners, Partners, Principal Stakeholders, Directors, and Members

7. Has this person or entity been convicted of a felony or had any type of registration or license suspended or revoked in any administrative or judicial proceeding?
Yes No X

If the answer to either of these questions is "Yes," a statement explaining the circumstances of the felony, suspension or revocation must be provided below.

8. Phone: [redacted]		9. Fax [redacted]	
10. Email: [redacted]			
11. Residence Address: [redacted]			
12. City: [redacted]	13. State: [redacted]	14. ZIP Code: [redacted]	

15. Formal Education		Dates Attended		Degree	
Institution	Address	From	To	Degree Re c e ived	Date Received
Wagner College	One Campus Road Staten Island, NY 10301	1982	1986	B.S. in Business Administration	6/1986

Appendix A:
Affidavit for Board Members, Officers, Managers, Owners, Partners, Principal Stakeholders, Directors, and Members

16. Licenses Held: List any and all licenses issued by a governmental or other regulatory entity.

Type of Professional License	License Number	Institution Granting License (Mailing Address, Phone, Email)	Effective Date	Expiration Date
		N/A		

17. Employment History for the Past 10 Years: Start with MOST RECENT employment and include employment during the last 10 years. Attach additional copies of page 3, if necessary.

Redacted pursuant to N.Y. Public Officers Law, Art.6

Appendix A:
Affidavit for Board Members, Officers, Managers, Owners, Partners, Principal Stakeholders, Directors, and Members

Street Address:		
City:	State:	Zip Code:
Starting Date of Employment:	Ending Date of Employment:	
Name of Supervisor for Reference:	Supervisor Phone Number:	
Position/Responsibilities		
Reason For Departure:		
Name of Employer:		
Type of Business:		
Street Address:		
City:	State:	Zip Code:
Starting Date of Employment:	Ending Date of Employment:	
Name of Supervisor for Reference:	Supervisor Phone Number:	
Position/Responsibilities		
Reason For Departure:		
Name of Employer:		
Type of Business:		
Street Address:		
City:	State:	Zip Code:
Starting Date of Employment:	Ending Date of Employment:	
Name of Supervisor for Reference:	Supervisor Phone Number:	
Position/Responsibilities		
Reason For Departure:		
Name of Employer:		

Appendix A:
Affidavit for Board Members, Officers, Managers, Owners, Partners, Principal Stakeholders, Directors, and Members

Type of Business:		
Street Address:		
City:	State:	Zip Code:
Starting Date of Employment:	Ending Date of Employment:	
Name of Supervisor for Reference:	Supervisor Phone Number:	
Position/Responsibilities:		
Reason For Departure:		
Name of Employer:	Type of Business:	
Street Address:		
City:	State:	Zip Code:
Starting Date of Employment:	Ending Date of Employment:	
Name of Supervisor for Reference:	Supervisor Phone Number:	
Position/Responsibilities:		
Reason For Departure:		

18. Offices Held or Ownership Interest in Other Businesses

List any affiliations you have been associated with in the past 10 years. Affiliation, for the purpose of this section, includes serving as either a board member, officer, manager, owner, partner, principal stakeholder, director or member of the organization. Organizations outside of New York State must also be disclosed.

Have you owned or operated a business or had any affiliations with the operations of a business in New York, in the USA, or in other countries? ☑ Yes ☐ No

From: 5/29/1984	Name and Address of Business: Kozy Shack Enterprises 83 Cuba St Hicksville NY 11802	
To: 7/31/2012		
Business Type: Food Industry	Office Held/Nature of Interest: Board member [redacted]	☑ open ☐ closed ☐ proposed
Name, Address and Phone Number of Licensing/Regulatory Agency, if applicable:		

Appendix A:
Affidavit for Board Members, Officers, Managers, Owners, Partners, Principal Stakeholders, Directors, and Members

Redacted pursuant to N.Y. Public Officers Law, Art.6

Name, Address and Phone Number of Licensing/Regulatory Agency, if applicable:

Redacted pursuant to N.Y. Public Officers Law, Art.6

Name, Address and Phone Number of Licensing/Regulatory Agency, if applicable:

Redacted pursuant to N.Y. Public Officers Law, Art.6

Name, Address and Phone Number of Licensing/Regulatory Agency, if applicable

Appendix A:
Affidavit for Board Members, Officers, Managers, Owners, Partners, Principal Stakeholders, Directors, and Members

19. Affirmative Statement of Qualifications

For individuals who have not previously served as a director/officer nor have had managerial experience, please include a statement below explaining how you are qualified to operate the proposed facility. This statement should include, but not be limited to, any relevant community/volunteer background and experience.

Please refer to my attached biography, which details my experience and capability to play an important role in the operation of the Registered Organization.

20. The undersigned certifies, under penalty of perjury, that the information contained herein or attached hereto is accurate, true, and complete in all material respects.

Signature: Michael Cardi	Date: 6-2-15
Notary Name: Faith Philipson	Notary Registration Number: 01PH6289923
Notary (Notary Must Affix Stamp or Seal)	Date: 6-2-15

FAITH PHILIPSON
Notary Public, State of New York
No. 01PH6289923
Qualified in Richmond County
Commission Expires 09/30/17

Michael Caridi, COO

Michael's career started as a [redacted]. As a hands-on employee he learned the business from the bottom up. Michael earned a Bachelor of Science Degree in Business Administration from Wagner College, and for over 26 years he had worked in all operational phases of the company.

Redacted pursuant to N.Y. Public Officers Law, Art.6

Michael was elected to the Kozy Shack Board of Directors in 2008. [redacted]

[redacted]

Michael is also very active in community affairs in New York. He sits on the Board of Trustees Executive committee of Staten Island Hospital. He also is a Board of Trustee of the North Shore –Long Island Jewish Health System and is a member of the Audit and Corporate Compliance committee. He is also extremely proud to serve as the Chairman for the Vincent Gruppuso Foundation. This organization currently provides grants to Children's organization for education and health care. He also sits on the Board for the St George Theater where he was appointed Treasurer in October 2009. This organization is dedicated to the restoration of the historic St George Theatre and its development as a cultural and performing arts centre for the community. Additionally Michael is on the sports committee of his local parish.

Appendix A:
Affidavit for Board Members, Officers, Managers, Owners, Partners, Principal Stakeholders, Directors, and Members

Appendix A **must** be completed for all board members, officers, managers, owners, partners, principal stakeholders, directors, and members. For board members, officers, managers, owners, partners, directors, and members of the applicant that are not natural persons, Appendix A must be completed by each board member, officer, manager, owner, partner, director and member of that entity, going back to the level of ownership by a natural person. **An Organizational Chart documenting your organizational structure must be included with this application.**

1. Business Name: Citiva Medical LLC

This is the name that was entered in Section A of the Application for Registration as a Registered Organization.

2. Name: Taylor Gerd | 3. Title:

4. Briefly describe the role of this person or entity in the proposed registered organization:

My trust is a member of VG Capital that owns shares in VG Citiva Medical holding,LLC witch hold shares in Citiva medical LLC.

5. Will this person or entity come into contact with medical marijuana or medical marijuana products?
☐ **Yes** ☑ **No**

Any managers who may come in contact with or handle medical marijuana, including medical marijuana products, shall be subject to a fingerprinting process as part of a criminal history background check in compliance with the procedures established by Division of Criminal Justice Services and submission of the applicable fee. Criminal history background checks must be done through Identogo at http://www.identogo.com/FP/NewYork.aspx using the ORI number NY0412500 and the Fingerprint Reason "Control Substance License."

6. Has this person or entity held any position of management or ownership during the preceding ten years of a 10% or greater interest in any other business which manufactured or distributed drugs? ☐ **Yes** ☑ **No**

If the answer to this question is yes, provide the name of the business, a statement defining the position of management or ownership held in such business, and any finding of violations of law or regulation by a governmental agency against the business or person or entity.

Appendix A:
Affidavit for Board Members, Officers, Managers, Owners, Partners, Principal Stakeholders, Directors, and Members

7. Has this person or entity been convicted of a felony or had any type of registration or license suspended or revoked in any administrative or judicial proceeding?
☐ Yes ☑ No

If the answer to either of these questions is "Yes," a statement explaining the circumstances of the felony, suspension or revocation must be provided below.

8. Phone: [redacted]	9. Fax:
10. Email: [redacted]	
11. Residence Address: [redacted]	
12. City: [redacted]	13. State: [redacted] 14. ZIP Code: [redacted]

15. Formal Education		Dates Attended		Degree	
Institution	Address	From	To	Degree Received	Date Received

Appendix A:
Affidavit for Board Members, Officers, Managers, Owners, Partners, Principal Stakeholders, Directors, and Members

16. Licenses Held: List any and all licenses issued by a governmental or other regulatory entity.

Type of Professional License	License Number	Institution Granting License (Mailing Address, Phone, Email)	Effective Date	Expiration Date

17. Employment History for the Past 10 Years: Start with MOST RECENT employment and include employment during the last 10 years. Attach additional copies of page 3, if necessary.

Name of Employer:		
Type of Business:		
Street Address:		
City:	State:	Zip Code:
Starting Date of Employment:	Ending Date of Employment:	
Name of Supervisor for Reference:	Supervisor Phone Number:	
Position/Responsibilities:		
Reason For Departure:		
Name of Employer:		
Type of Business:		

Appendix A:
Affidavit for Board Members, Officers, Managers, Owners, Partners, Principal Stakeholders, Directors, and Members

Street Address:		
City:	State:	Zip Code:
Starting Date of Employment:	Ending Date of Employment:	
Name of Supervisor for Reference:	Supervisor Phone Number:	
Position/Responsibilities:		
Reason For Departure:		
Name of Employer:		
Type of Business:		
Street Address:		
City:	State:	Zip Code:
Starting Date of Employment:	Ending Date of Employment:	
Name of Supervisor for Reference:	Supervisor Phone Number:	
Position/Responsibilities:		
Reason For Departure:		
Name of Employer:		
Type of Business:		
Street Address:		
City:	State:	Zip Code:
Starting Date of Employment:	Ending Date of Employment:	
Name of Supervisor for Reference:	Supervisor Phone Number:	
Position/Responsibilities:		
Reason For Departure:		
Name of Employer:		

Appendix A:
Affidavit for Board Members, Officers, Managers, Owners, Partners, Principal Stakeholders, Directors, and Members

Type of Business:		
Street Address:		
City:	State:	Zip Code:
Starting Date of Employment:	Ending Date of Employment:	
Name of Supervisor for Reference:	Supervisor Phone Number:	
Position/Responsibilities:		
Reason For Departure:		
Name of Employer:	Type of Business:	
Street Address:		
City:	State:	Zip Code:
Starting Date of Employment:	Ending Date of Employment:	
Name of Supervisor for Reference:	Supervisor Phone Number:	
Position/Responsibilities:		
Reason For Departure:		

18. Offices Held or Ownership Interest in Other Businesses

List any affiliations you have been associated with in the past 10 years. Affiliation, for the purpose of this section, includes serving as either a board member, officer, manager, owner, partner, principal stakeholder, director or member of the organization. Organizations outside of New York State must also be disclosed.

Have you owned or operated a business or had any affiliations with the operations of a business in New York, in the USA, or in other countries? ☐ **Yes** ☑ **No**

From:	Name and Address of Business:	
To:		
Business Type:	Office Held/Nature of Interest:	☐ **open** ☐ **closed** ☐ **proposed**
Name, Address and Phone Number of Licensing/Regulatory Agency, if applicable:		

Appendix A:
Affidavit for Board Members, Officers, Managers, Owners, Partners, Principal Stakeholders, Directors, and Members

From: To:	Name and Address of Business:	
Business Type:	Office Held/Nature of Interest:	☐ open ☐ closed ☐ proposed
Name, Address and Phone Number of Licensing/Regulatory Agency, if applicable:		

From: To:	Name and Address of Business:	
Business Type:	Office Held/Nature of Interest:	☐ open ☐ closed ☐ proposed
Name, Address and Phone Number of Licensing/Regulatory Agency, if applicable:		

From: To:	Name and Address of Business:	
Business Type:	Office Held/Nature of Interest:	☐ open ☐ closed ☐ proposed
Name, Address and Phone Number of Licensing/Regulatory Agency, if applicable:		

Appendix A:
Affidavit for Board Members, Officers, Managers, Owners, Partners, Principal Stakeholders, Directors, and Members

19. Affirmative Statement of Qualifications

For individuals who have not previously served as a director/officer nor have had managerial experience, please include a statement below explaining how you are qualified to operate the proposed facility. This statement should include, but not be limited to, any relevant community/volunteer background and experience.

20. The undersigned certifies, under penalty of perjury, that the information contained herein or attached hereto is accurate, true, and complete in all material respects.

Signature: Joanne Caridi Trustee	Date: 6/2/15
Notary Name: [illegible]	Notary Registration Number: 01PH6289923
Notary (Notary Must Affix Stamp or Seal)	Date: 6/2/15

FAITH PHILIPSON
Notary Public, State of New York
No. 01PH6289923
Qualified in Richmond County
Commission Expires 09/30/17

Appendix A:
Affidavit for Board Members, Officers, Managers, Owners, Partners, Principal Stakeholders, Directors, and Members

Appendix A **must** be completed for all board members, officers, managers, owners, partners, principal stakeholders, directors, and members. For board members, officers, managers, owners, partners, directors, and members of the applicant that are not natural persons, Appendix A must be completed by each board member, officer, manager, owner, partner, director and member of that entity, going back to the level of ownership by a natural person. **An Organizational Chart documenting your organizational structure must be included with this application.**

1. Business Name: Citiva Medical LLC

This is the name that was entered in Section A of the Application for Registration as a Registered Organization.

2. Name: Jack Dangelo | 3. Title: Chief Medical Officer

4. Briefly describe the role of this person or entity in the proposed registered organization:

- Provide leadership and expertise in the development of research strategic programs in line with corporate mission
- Medical resource to the company as a whole including protocols, adverse events, discussions with investigators
- Work closely with research centers, dispensaries and patient leaders
- Planning and leadership to ensure appropriate structures, systems and to provide accurate, fair and balanced product knowledge to medical queries

5. Will this person or entity come into contact with medical marijuana or medical marijuana products?

☒ Yes ☐ No

Please see proof of fingerprinting immediately following this page

Any managers who may come in contact with or handle medical marijuana, including medical marijuana products, shall be subject to a fingerprinting process as part of a criminal history background check in compliance with the procedures established by Division of Criminal Justice Services and submission of the applicable fee. Criminal history background checks must be done through Identogo at http://www.identogo.com/FP/NewYork.aspx using the ORI number NY0412500 and the Fingerprint Reason "Control Substance License."

6. Has this person or entity held any position of management or ownership during the preceding ten years of a 10% or greater interest in any other business which manufactured or distributed drugs? ☐ Yes ☒ No

If the answer to this question is yes, provide the name of the business, a statement defining the position of management or ownership held in such business, and any finding of violations of law or regulation by a governmental agency against the business or person or entity.

SAFRAN

New York State
EasyPath Network

Applicant: Jack Dangelo
Address: [redacted]
UCN: 151480087786

Date/Time: 5/28/15
Fingerprint Center: New York-Park Place
Agency: NYS Department of Health
Reason Fingerprinted:

Amount Paid: 84.95
Fee Paid By: [/] Credit/Debit card [ ] Money Order
[ ] Agency Acct [ ] Check

Operator ID:

(Agency Copy)

SAFRAN

New York State
EasyPath Network

Applicant: Jack Dangelo
Address: [redacted]
UCN: 151480087786

Date/Time: 5/28/15
Fingerprint Center: New York-Park Place
Agency: NYS Department of Health
Reason Fingerprinted:

Amount Paid: 84.95
Fee Paid By: [/] Credit/Debit card [ ] Money Order
[ ] Agency Acct [ ] Check

Operator ID:

(Applicant Copy)

Appendix A:
Affidavit for Board Members, Officers, Managers, Owners, Partners, Principal Stakeholders, Directors, and Members

7. Has this person or entity been convicted of a felony or had any type of registration or license suspended or revoked in any administrative or judicial proceeding?
☐ Yes ☒ No

If the answer to either of these questions is "Yes," a statement explaining the circumstances of the felony, suspension or revocation must be provided below.

8. Phone: [redacted]		9. Fax —	
10. Email: [redacted]			
11. Residence Address: [redacted]			
12. City: [redacted]	13. State [redacted]	14. ZIP Code: [redacted]	
15. Formal Education	Dates Attended	Degree	
Institution / Address	From / To	Degree Received	Date Received
Lafayette College — EASTON, PA	1977 / 1981	BA degree	1981
St. George's University School of Medicine — Grenada, West Indies	1981 / 1985	MD degree	1985
Georgetown University Hospital — 1800 Reservoir Rd, NW Washington DC	1985 / 1988	PEDIATRIC RESIDENCY	1988
George Washington University Hospital — Washington DC	1991 / 1994	PHYSICAL MEDICINE AND REHAB RESIDENCY	1994

Appendix A:
Affidavit for Board Members, Officers, Managers, Owners, Partners, Principal Stakeholders, Directors, and Members

16. Licenses Held: List any and all licenses issued by a governmental or other regulatory entity.

Type of Professional License	License Number	Institution Granting License (Mailing Address, Phone, Email)	Effective Date	Expiration Date
MEDICAL DOCTOR; professionis	195391	Dpt. of Education	1994	4/28/2017

17. Employment History for the Past 10 Years: Start with MOST RECENT employment and include employment during the last 10 years. Attach additional copies of page 3, if necessary.

Redacted pursuant to N.Y. Public Officers Law, Art.6

Appendix A:
Affidavit for Board Members, Officers, Managers, Owners, Partners, Principal Stakeholders, Directors, and Members

Redacted pursuant to N.Y. Public Officers Law, Art.6

Name of Employer:		
Type of Business:		
Street Address:		
City:	State:	Zip Code:
Starting Date of Employment:	Ending Date of Employment:	
Name of Supervisor for Reference:	Supervisor Phone Number:	
Position/Responsibilities:		
Reason For Departure:		
Name of Employer:		
Type of Business:		
Street Address:		
City:	State:	Zip Code:
Starting Date of Employment:	Ending Date of Employment:	
Name of Supervisor for Reference:	Supervisor Phone Number:	
Position/Responsibilities:		
Reason For Departure:		
Name of Employer:		

Appendix A:
Affidavit for Board Members, Officers, Managers, Owners, Partners, Principal Stakeholders, Directors, and Members

Type of Business:		
Street Address:		
City:	State:	Zip Code:
Starting Date of Employment:	Ending Date of Employment:	
Name of Supervisor for Reference:	Supervisor Phone Number:	
Position/Responsibilities:		
Reason For Departure:		
Name of Employer:	Type of Business:	
Street Address:		
City:	State:	Zip Code:
Starting Date of Employment:	Ending Date of Employment:	
Name of Supervisor for Reference:	Supervisor Phone Number:	
Position/Responsibilities:		
Reason For Departure:		

18. Offices Held or Ownership Interest in Other Businesses

List any affiliations you have been associated with in the past 10 years. Affiliation, for the purpose of this section, includes serving as either a board member, officer, manager, owner, partner, principal stakeholder, director or member of the organization. Organizations outside of New York State must also be disclosed.

Have you owned or operated a business or had any affiliations with the operations of a business in New York, in the USA, or in other countries? ☒ Yes ☐ No

From: 2006	Name and Address of Business: FEDERALLY Qualified Health Center of RICHMOND	
To: 2009	235 Port RICHMOND AVE SI, NY 10302	
Business Type: MEDICAL CARE	Office Held/Nature of Interest: Founding Board MEMBER	☐ open ☒ closed ☐ proposed
Name, Address and Phone Number of Licensing/Regulatory Agency, if applicable: —		

NEW YORK STATE | Department of Health

Medical Marijuana Program
Application for Registration as a Registered Organization

Appendix A:
Affidavit for Board Members, Officers, Managers, Owners, Partners, Principal Stakeholders, Directors, and Members

Redacted pursuant to N.Y. Public Officers Law, Art.6

From: 2005 To: present	Name and Address of Business: Staten Island Heart Society 3055 Richmond Rd SI, NY 10306	
Business Type: Community Service	Office Held/Nature of Interest: Executive Board Member	☒ open ☐ closed ☐ proposed
Name, Address and Phone Number of Licensing/Regulatory Agency, if applicable:		
From: ~~2005~~ 1994 To: present	Name and Address of Business: Richmond County Medical Society 460 Brielle Ave SI, NY 10314	
Business Type: Advocacy	Office Held/Nature of Interest: Executive Board Member	☒ open ☐ closed ☐ proposed
Name, Address and Phone Number of Licensing/Regulatory Agency, if applicable:		

Appendix A:
Affidavit for Board Members, Officers, Managers, Owners, Partners, Principal Stakeholders, Directors, and Members

19. Affirmative Statement of Qualifications

For individuals who have not previously served as a director/officer nor have had managerial experience, please include a statement below explaining how you are qualified to operate the proposed facility. This statement should include, but not be limited to, any relevant community/volunteer background and experience.

Please refer to my attached biography, which details my experience and capability to play an important role in the operation of the Registered Organization.

20. The undersigned certifies, under penalty of perjury, that the information contained herein or attached hereto is accurate, true, and complete in all material respects.

Signature:	Date: 6/1/2015
Notary Name: Sheryl Ann Barrett	Notary Registration Number: 01BA6201803
Notary (Notary Must Affix Stamp or Seal)	Date: June 1, 2015

SHERYL ANN BARRETT
Notary Public, State of New York
No. 01BA6201803
Qualified in Richmond County
Commission Expires March 2, 2017

Dr. Jack D'Angelo, Chief Medical Officer

[redacted]He received his undergraduate degrees in Theology and Biology at Lafayette College in Easton, PA. Dr. Jack (as he is commonly known), completed a pediatric residency at Georgetown University, a fellowship in pediatric physical medicine at the National Children's Medical center and a residency in Physical Medicine and Rehabilitation at the George Washington University Hospital and the National Rehabilitation hospital – all located in Washington D.C.

In 2009, he received his M.B.A. from the George Washington School of Business in Washington D.C. He has been in active member of the non-profit community on Staten Island serving as the President of the Richmond County Medical Society, President of the Staten Island Heart Society and was a founding board member of the Community Health Center of Richmond. He has been the recipient of the Staten Island Chamber of Commerce, Louis B. Miller, Award, 2011 and the South Shore Democratic Club, Community Service Award, 2011.

Dr. D'Angelo is board certified and is a Diplomat of the American Academy of Pediatrics. [redacted]

[redacted]

[redacted]

NEW YORK STATE | Department of Health

Medical Marijuana Program
Application for Registration as a Registered Organization

Appendix A:
Affidavit for Board Members, Officers, Managers, Owners, Partners, Principal Stakeholders, Directors, and Members

Appendix A **must** be completed for all board members, officers, managers, owners, partners, principal stakeholders, directors, and members. For board members, officers, managers, owners, partners, directors, and members of the applicant that are not natural persons, Appendix A must be completed by each board member, officer, manager, owner, partner, director and member of that entity, going back to the level of ownership by a natural person. **An Organizational Chart documenting your organizational structure must be included with this application.**

1. Business Name: Citiva Medical LLC

This is the name that was entered in Section A of the Application for Registration as a Registered Organization.

2. Name: Alicia Durante | 3. Title: Member

4. Briefly describe the role of this person or entity in the proposed registered organization:
Although I will not have an active role in the day-to-day operations, I will provide support and advice to the management team, based on my business experience.

5. Will this person or entity come into contact with medical marijuana or medical marijuana products?
☐ Yes ☑ No

Any managers who may come in contact with or handle medical marijuana, including medical marijuana products, shall be subject to a fingerprinting process as part of a criminal history background check in compliance with the procedures established by Division of Criminal Justice Services and submission of the applicable fee. Criminal history background checks must be done through Identogo at http://www.identogo.com/FP/NewYork.aspx using the ORI number NY0412500 and the Fingerprint Reason "Control Substance License."

6. Has this person or entity held any position of management or ownership during the preceding ten years of a 10% or greater interest in any other business which manufactured or distributed drugs? ☐ Yes ☑ No

If the answer to this question is yes, provide the name of the business, a statement defining the position of management or ownership held in such business, and any finding of violations of law or regulation by a governmental agency against the business or person or entity.

Appendix A:
Affidavit for Board Members, Officers, Managers, Owners, Partners, Principal Stakeholders, Directors, and Members

7. Has this person or entity been convicted of a felony or had any type of registration or license suspended or revoked in any administrative or judicial proceeding?
☐ Yes ☑ No

If the answer to either of these questions is "Yes," a statement explaining the circumstances of the felony, suspension or revocation must be provided below.

8. Phone: [redacted]	9. Fax:
10. Email: [redacted]	
11. Residence Address: [redacted]	
12. City: [redacted]	13. State [redacted] 14. ZIP Code: [redacted]

15. Formal Education		Dates Attended		Degree	
Institution	Address	From	To	Degree Received	Date Received
Iono	New Rochelle, NY	1980	1984	BS - Biology	May 1984
College of Staten Island	Staten Island, NY	1984	1987	Associates - Nursing	May 1987

Appendix A:
Affidavit for Board Members, Officers, Managers, Owners, Partners, Principal Stakeholders, Directors, and Members

16. Licenses Held: List any and all licenses issued by a governmental or other regulatory entity.

Type of Professional License	License Number	Institution Granting License (Mailing Address, Phone, Email)	Effective Date	Expiration Date
		N/A		

17. Employment History for the Past 10 Years: Start with MOST RECENT employment and include employment during the last 10 years. Attach additional copies of page 3, if necessary.

Redacted pursuant to N.Y. Public Officers Law, Art.6

Appendix A:
Affidavit for Board Members, Officers, Managers, Owners, Partners, Principal Stakeholders, Directors, and Members

Street Address:		
City:	State:	Zip Code:
Starting Date of Employment:	Ending Date of Employment:	
Name of Supervisor for Reference:	Supervisor Phone Number:	
Position/Responsibilities:		
Reason For Departure:		
Name of Employer:		
Type of Business:		
Street Address:		
City:	State:	Zip Code:
Starting Date of Employment:	Ending Date of Employment:	
Name of Supervisor for Reference:	Supervisor Phone Number:	
Position/Responsibilities:		
Reason For Departure:		
Name of Employer:		
Type of Business:		
Street Address:		
City:	State:	Zip Code:
Starting Date of Employment:	Ending Date of Employment:	
Name of Supervisor for Reference:	Supervisor Phone Number:	
Position/Responsibilities:		
Reason For Departure:		
Name of Employer:		

Appendix A:
Affidavit for Board Members, Officers, Managers, Owners, Partners, Principal Stakeholders, Directors, and Members

Type of Business:		
Street Address:		
City:	State:	Zip Code:
Starting Date of Employment:	Ending Date of Employment:	
Name of Supervisor for Reference:	Supervisor Phone Number:	
Position/Responsibilities:		
Reason For Departure:		
Name of Employer:	Type of Business:	
Street Address:		
City:	State:	Zip Code:
Starting Date of Employment:	Ending Date of Employment:	
Name of Supervisor for Reference:	Supervisor Phone Number:	
Position/Responsibilities:		
Reason For Departure:		

18. Offices Held or Ownership Interest in Other Businesses

List any affiliations you have been associated with in the past 10 years. Affiliation, for the purpose of this section, includes serving as either a board member, officer, manager, owner, partner, principal stakeholder, director or member of the organization. Organizations outside of New York State must also be disclosed.

Have you owned or operated a business or had any affiliations with the operations of a business in New York, in the USA, or in other countries? ☐ **Yes** ☒ **No**

From:	Name and Address of Business:	
To:		
Business Type:	Office Held/Nature of Interest:	☐ **open** ☐ **closed** ☐ **proposed**
Name, Address and Phone Number of Licensing/Regulatory Agency, if applicable:		

Appendix A:
Affidavit for Board Members, Officers, Managers, Owners, Partners, Principal Stakeholders, Directors, and Members

From:	Name and Address of Business:	
To:		
Business Type:	Office Held/Nature of Interest:	☐open ☐closed ☐proposed
Name, Address and Phone Number of Licensing/Regulatory Agency, if applicable:		
From:	Name and Address of Business:	
To:		
Business Type:	Office Held/Nature of Interest:	☐open ☐closed ☐proposed
Name, Address and Phone Number of Licensing/Regulatory Agency, if applicable:		
From:	Name and Address of Business:	
To:		
Business Type:	Office Held/Nature of Interest:	☐open ☐closed ☐proposed
Name, Address and Phone Number of Licensing/Regulatory Agency, if applicable:		

Appendix A:
Affidavit for Board Members, Officers, Managers, Owners, Partners, Principal Stakeholders, Directors, and Members

19. Affirmative Statement of Qualifications

For individuals who have not previously served as a director/officer nor have had managerial experience, please include a statement below explaining how you are qualified to operate the proposed facility. This statement should include, but not be limited to, any relevant community/volunteer background and experience.

As indicated above, I have professional business experience that will allow me to support the successful development and operation of Citiva Medical LLC. I will bring a perspective of general business operation that I believe will complement the experience of the management team, which has the expertise in the medical marihuana industry and ancillary program elements. Although I will not be involved in day-to-day operations, I will be available as a resource to the management team, and believe that my specific capabilities will make the Citiva team a well-balanced organization.

20. The undersigned certifies, under penalty of perjury, that the information contained herein or attached hereto is accurate, true, and complete in all material respects.

Signature: Alicia Durante	Date: 6/1/2015
Notary Name: Sheryl Ann Barrett	Notary Registration Number: 01BA6201803
Notary (Notary Must Affix Stamp or Seal)	Date: June 1, 2015

SHERYL ANN BARRETT
Notary Public, State of New York
No. 01BA6201803
Qualified in Richmond County
Commission Expires March 2, 2017

NEW YORK STATE | Department of Health

Medical Marijuana Program
Application for Registration as a Registered Organization

Appendix A:
Affidavit for Board Members, Officers, Managers, Owners, Partners, Principal Stakeholders, Directors, and Members

Appendix A must be completed for all board members, officers, managers, owners, partners, principal stakeholders, directors, and members. For board members, officers, managers, owners, partners, directors, and members of the applicant that are not natural persons, Appendix A must be completed by each board member, officer, manager, owner, partner, director and member of that entity, going back to the level of ownership by a natural person. **An Organizational Chart documenting your organizational structure must be included with this application.**

1. Business Name: Citiva Medical LLC

This is the name that was entered in Section A of the Application for Registration as a Registered Organization.

2. Name: Anna Dykshteyn 3. Title: Member

4. Briefly describe the role of this person or entity in the proposed registered organization:
Although I will not have an active role in the day-to-day operations, I will provide support and advice to the management team, based on my business experience.

5. Will this person or entity come into contact with medical marijuana or medical marijuana products?
☐ Yes ☒ No

Any managers who may come in contact with or handle medical marijuana, including medical marijuana products, shall be subject to a fingerprinting process as part of a criminal history background check in compliance with the procedures established by Division of Criminal Justice Services and submission of the applicable fee. Criminal history background checks must be done through Identogo at http://www.identogo.com/FP/NewYork.aspx using the ORI number NY0412500 and the Fingerprint Reason "Control Substance License."

6. Has this person or entity held any position of management or ownership during the preceding ten years of a 10% or greater interest in any other business which manufactured or distributed drugs? ☐ Yes ☒ No

If the answer to this question is yes, provide the name of the business, a statement defining the position of management or ownership held in such business, and any finding of violations of law or regulation by a governmental agency against the business or person or entity.

Appendix A:
Affidavit for Board Members, Officers, Managers, Owners, Partners, Principal Stakeholders, Directors, and Members

7. Has this person or entity been convicted of a felony or had any type of registration or license suspended or revoked in any administrative or judicial proceeding?
☐ Yes ☑ No

If the answer to either of these questions is "Yes," a statement explaining the circumstances of the felony, suspension or revocation must be provided below.

8. Phone: [redacted]	9. Fax: [redacted]
10. Email: [redacted]	
11. Residence Address: [redacted]	
12. City: [redacted]	13. State: [redacted] 14. ZIP Code: [redacted]

15. Formal Education		Dates Attended		Degree	
Institution	Address	From	To	Degree Received	Date Received
SUNY Downstate University	450 Clarkson Ave Brooklyn, NY 11235	1993	1995	B.S. -Health Information Management	06/1995

Appendix A:
Affidavit for Board Members, Officers, Managers, Owners, Partners, Principal Stakeholders, Directors, and Members

16. Licenses Held: List any and all licenses issued by a governmental or other regulatory entity.

Type of Professional License	License Number	Institution Granting License (Mailing Address, Phone, Email)	Effective Date	Expiration Date

17. Employment History for the Past 10 Years: Start with MOST RECENT employment and include employment during the last 10 years. Attach additional copies of page 3, if necessary.

Redacted pursuant to N.Y. Public Officers Law, Art.6

Appendix A:
Affidavit for Board Members, Officers, Managers, Owners, Partners, Principal Stakeholders, Directors, and Members

Street Address:		
City:	State:	Zip Code:
Starting Date of Employment:	Ending Date of Employment:	
Name of Supervisor for Reference:	Supervisor Phone Number:	
Position/Responsibilities:		
Reason For Departure:		
Name of Employer:		
Type of Business:		
Street Address:		
City:	State:	Zip Code:
Starting Date of Employment:	Ending Date of Employment:	
Name of Supervisor for Reference:	Supervisor Phone Number:	
Position/Responsibilities:		
Reason For Departure:		
Name of Employer		
Type of Business		
Street Address		
City:	State	Zip Code
Starting Date of Employment:	Ending Date of Employment:	
Name of Supervisor for Reference:	Supervisor Phone Number:	
Position/Responsibilities		
Reason For Departure		
Name of Employer		

Appendix A:
Affidavit for Board Members, Officers, Managers, Owners, Partners, Principal Stakeholders, Directors, and Members

Type of Business:		
Street Address:		
City:	State:	Zip Code:
Starting Date of Employment:	Ending Date of Employment:	
Name of Supervisor for Reference:	Supervisor Phone Number:	
Position/Responsibilities:		
Reason For Departure:		
Name of Employer.	Type of Business	
Street Address.		
City:	State:	Zip Code:
Starting Date of Employment.	Ending Date of Employment:	
Name of Supervisor for Reference	Supervisor Phone Number:	
Position/Responsibilities:		
Reason For Departure:		

18. Offices Held or Ownership Interest in Other Businesses

List any affiliations you have been associated with in the past 10 years. Affiliation, for the purpose of this section, includes serving as either a board member, officer, manager, owner, partner, principal stakeholder, director or member of the organization. Organizations outside of New York State must also be disclosed.

Have you owned or operated a business or had any affiliations with the operations of a business in New York, in the USA, or in other countries? ☑ Yes ☐ No

Redacted pursuant to N.Y. Public Officers Law, Art.6

Appendix A:
Affidavit for Board Members, Officers, Managers, Owners, Partners, Principal Stakeholders, Directors, and Members

From:	Name and Address of Business	
To:		
Business Type	Office Held/Nature of Interest	☐open ☐closed ☐proposed
Name, Address and Phone Number of Licensing/Regulatory Agency, if applicable		
From:	Name and Address of Business:	
To:		
Business Type:	Office Held/Nature of Interest:	☐open ☐closed ☐proposed
Name, Address and Phone Number of Licensing/Regulatory Agency, if applicable:		
From:	Name and Address of Business:	
To		
Business Type	Office Held/Nature of Interest	☐open ☐closed ☐proposed
Name, Address and Phone Number of Licensing/Regulatory Agency, if applicable		

Appendix A:
Affidavit for Board Members, Officers, Managers, Owners, Partners, Principal Stakeholders, Directors, and Members

19. Affirmative Statement of Qualifications

For individuals who have not previously served as a director/officer nor have had managerial experience, please include a statement below explaining how you are qualified to operate the proposed facility. This statement should include, but not be limited to, any relevant community/volunteer background and experience.

Please refer to my attached biography, which details my experience and capability to play an important role in the operation of the Registered Organization.

20. The undersigned certifies, under penalty of perjury, that the information contained herein or attached hereto is accurate, true, and complete in all material respects.

Signature:	Date: 6/1/2015
Notary Name: Oleksandr Sushchenko	Notary Registration Number: 01SU6237130
Notary (Notary Must Affix Stamp or Seal)	Date: 6/1/15

OLEKSANDR SUSHCHENKO
Notary Public - State of New York
NO. 01SU6237130
Qualified in Kings County
My Commission Expires Mar 14, 2019

Anna Dykshteyn [redacted]

[redacted] Anna Dykshteyn holds a Bachelor of Science degree in Health Information Management from SUNY Downstate.

[redacted]

She has extensive management experience with home healthcare industry, private duty, and medical staffing services.

[redacted]

She has experience in all aspects of financial forecasting, resource allocation, fund management, control, and strategic planning.

Anna is an active member of HCP/CHC and SUN B.

NEW YORK STATE | Department of Health

Medical Marijuana Program
Application for Registration as a Registered Organization

Appendix A:
Affidavit for Board Members, Officers, Managers, Owners, Partners, Principal Stakeholders, Directors, and Members

Appendix A **must** be completed for all board members, officers, managers, owners, partners, principal stakeholders, directors, and members. For board members, officers, managers, owners, partners, directors, and members of the applicant that are not natural persons, Appendix A must be completed by each board member, officer, manager, owner, partner, director and member of that entity, going back to the level of ownership by a natural person. **An Organizational Chart documenting your organizational structure must be included with this application.**

1. Business Name: Citiva Medical LLC

This is the name that was entered in Section A of the Application for Registration as a Registered Organization.

2. Name: Simon Field | 3. Title: Member

4. Briefly describe the role of this person or entity in the proposed registered organization:

Although I will not have an active role in the day-to-day operations I will provide support and advice to the management team, based on my business experience.

5. Will this person or entity come into contact with medical marijuana or medical marijuana products?

☐ Yes ☑ No

Any managers who may come in contact with or handle medical marijuana, including medical marijuana products, shall be subject to a fingerprinting process as part of a criminal history background check in compliance with the procedures established by Division of Criminal Justice Services and submission of the applicable fee. Criminal history background checks must be done through Identogo at http://www.identogo.com/FP/NewYork.aspx using the ORI number NY0412500 and the Fingerprint Reason "Control Substance License."

6. Has this person or entity held any position of management or ownership during the preceding ten years of a 10% or greater interest in any other business which manufactured or distributed drugs? ☑ Yes ☐ No

If the answer to this question is yes, provide the name of the business, a statement defining the position of management or ownership held in such business, and any finding of violations of law or regulation by a governmental agency against the business or person or entity.

Redacted pursuant to N.Y. Public Officers Law, Art.6

The NY Office of Professional Discipline conducted an inspection of the [redacted] in 2014 and found some very minor compliance issues. These did not rise to the level of formal disciplinary action by the Board of Regents. The OPD imposed a "minor and technical" violation fine.

Appendix A:

Affidavit for Board Members, Officers, Managers, Owners, Partners, Principal Stakeholders, Directors, and Members

7. Has this person or entity been convicted of a felony or had any type of registration or license suspended or revoked in any administrative or judicial proceeding?
☐ Yes ☒ No

If the answer to either of these questions is "Yes," a statement explaining the circumstances of the felony, suspension or revocation must be provided below.

8. Phone: [redacted]	9. Fax: [redacted]
10. Email: [redacted]	
11. Residence Address: [redacted]	
12. City: [redacted]	13. State: [redacted] 14. ZIP Code: [redacted]

15. Formal Education		Dates Attended		Degree	
Institution	Address	From	To	Degree Received	Date Received
ST. Johns University	8000 Utopia Pkwy Jamaica Ny 11439	Sept. 1991	June 1997	Masters in Science	June 1997

Appendix A:
Affidavit for Board Members, Officers, Managers, Owners, Partners, Principal Stakeholders, Directors, and Members

16. Licenses Held: List any and all licenses issued by a governmental or other regulatory entity.

Type of Professional License	License Number	Institution Granting License (Mailing Address, Phone, Email)	Effective Date	Expiration Date
Pharmacist Lic	045309	State Board of Pharmacy 52 Chambers street NY NY 10007	7/31/97	Current

17. Employment History for the Past 10 Years: Start with MOST RECENT employment and include employment during the last 10 years. Attach additional copies of page 3, if necessary.

Redacted pursuant to N.Y. Public Officers Law, Art.6

Appendix A:

Affidavit for Board Members, Officers, Managers, Owners, Partners, Principal Stakeholders, Directors, and Members

Redacted pursuant to N.Y. Public Officers Law, Art.6

Appendix A:

Affidavit for Board Members, Officers, Managers, Owners, Partners, Principal Stakeholders, Directors, and Members

Redacted pursuant to N.Y. Public Officers Law, Art.6

Appendix A:

Affidavit for Board Members, Officers, Managers, Owners, Partners, Principal Stakeholders, Directors, and Members

Redacted pursuant to N.Y. Public Officers Law, Art.6

Appendix A:
Affidavit for Board Members, Officers, Managers, Owners, Partners, Principal Stakeholders, Directors, and Members

19. Affirmative Statement of Qualifications

For individuals who have not previously served as a director/officer nor have had managerial experience, please include a statement below explaining how you are qualified to operate the proposed facility. This statement should include, but not be limited to, any relevant community/volunteer background and experience.

Please refer to my attached biography, which details my experience and capability to play an important role in the operation of the Registered Organization.

20. The undersigned certifies, under penalty of perjury, that the information contained herein or attached hereto is accurate, true, and complete in all material respects.

Signature:	Date: 6/1/2015
Notary Name: Arlen Leis	Notary Registration Number: 01LE6189388
Notary (Notary Must Affix Stamp or Seal) ARLEN LEIS NOTARY PUBLIC-STATE OF NEW YORK No. 01LE6189388 Qualified in Kings County My Commission Expires June 23, 2016	Date: 6/1/15

Simon Field has over 15 years of retail pharmacy experience.

Simon graduated from St. John's University in 1997 with a Masters in Science degree.

[redacted]

[redacted]

Simon has actively worked with numerous Home Health Care Aide Organizations, monitoring closely their medication therapy. He has been involved with local nursing homes and other elderly communities such as the Warbasse Housing Community.

Simon continues to thrive in his industry by keeping a close ear to what patients really need to improve their quality of life. [redacted].

Simon expects to make an impact on the quality of care for the elderly and is proud to be recognized as a great role model in his industry.

Appendix A:
Affidavit for Board Members, Officers, Managers, Owners, Partners, Principal Stakeholders, Directors, and Members

Appendix A **must** be completed for all board members, officers, managers, owners, partners, principal stakeholders, directors, and members. For board members, officers, managers, owners, partners, directors, and members of the applicant that are not natural persons, Appendix A must be completed by each board member, officer, manager, owner, partner, director and member of that entity, going back to the level of ownership by a natural person. **An Organizational Chart documenting your organizational structure must be included with this application.**

1. Business Name: Citiva, LLC

This is the name that was entered in Section A of the Application for Registration as a Registered Organization.

2. Name: Erica Fraga	3. Title: LLC, Member

4. Briefly describe the role of this person or entity in the proposed registered organization:

LLC, Member

5. Will this person or entity come into contact with medical marijuana or medical marijuana products?
☐ **Yes** ☑ **No**

Any managers who may come in contact with or handle medical marijuana, including medical marijuana products, shall be subject to a fingerprinting process as part of a criminal history background check in compliance with the procedures established by Division of Criminal Justice Services and submission of the applicable fee. Criminal history background checks must be done through Identogo at http://www.identogo.com/FP/NewYork.aspx using the ORI number NY0412500 and the Fingerprint Reason "Control Substance License."

6. Has this person or entity held any position of management or ownership during the preceding ten years of a 10% or greater interest in any other business which manufactured or distributed drugs? ☐ **Yes** ☑ **No**

If the answer to this question is yes, provide the name of the business, a statement defining the position of management or ownership held in such business, and any finding of violations of law or regulation by a governmental agency against the business or person or entity.

Appendix A:
Affidavit for Board Members, Officers, Managers, Owners, Partners, Principal Stakeholders, Directors, and Members

7. Has this person or entity been convicted of a felony or had any type of registration or license suspended or revoked in any administrative or judicial proceeding?
☐ Yes ☑ No

If the answer to either of these questions is "Yes," a statement explaining the circumstances of the felony, suspension or revocation must be provided below.

8. Phone: [redacted]	9. Fax:
10. Email: [redacted]	
11. Residence Address: [redacted]	
12. City: [redacted]	13. State: [redacted] 14. ZIP Code: [redacted]

15. Formal Education		Dates Attended		Degree	
Institution	Address	From	To	Degree Received	Date Received
Saint Mary's College	1928 Saint Mary's Road Moraga, CA 94575	1997	2001	BA	June 2001
[redacted]					

Appendix A:
Affidavit for Board Members, Officers, Managers, Owners, Partners, Principal Stakeholders, Directors, and Members

16. Licenses Held: List any and all licenses issued by a governmental or other regulatory entity.

Type of Professional License	License Number	Institution Granting License (Mailing Address, Phone, Email)	Effective Date	Expiration Date

17. Employment History for the Past 10 Years: Start with MOST RECENT employment and include employment during the last 10 years. Attach additional copies of page 3, if necessary.

Redacted pursuant to N.Y. Public Officers Law, Art.6

Appendix A:
Affidavit for Board Members, Officers, Managers, Owners, Partners, Principal Stakeholders, Directors, and Members
Redacted pursuant to N.Y. Public Officers Law, Art.6

Name of Employer:		
Type of Business:		
Street Address:		
City:	State:	Zip Code:
Starting Date of Employment:	Ending Date of Employment:	
Name of Supervisor for Reference:	Supervisor Phone Number:	
Position/Responsibilities:		
Reason For Departure:		
Name of Employer:		
Type of Business:		
Street Address:		
City:	State:	Zip Code:
Starting Date of Employment:	Ending Date of Employment:	
Name of Supervisor for Reference:	Supervisor Phone Number:	
Position/Responsibilities:		
Reason For Departure:		
Name of Employer:		

Appendix A:
Affidavit for Board Members, Officers, Managers, Owners, Partners, Principal Stakeholders, Directors, and Members

Type of Business:		
Street Address:		
City:	State:	Zip Code:
Starting Date of Employment:	Ending Date of Employment:	
Name of Supervisor for Reference:	Supervisor Phone Number:	
Position/Responsibilities:		
Reason For Departure:		
Name of Employer:	Type of Business:	
Street Address:		
City:	State:	Zip Code:
Starting Date of Employment:	Ending Date of Employment:	
Name of Supervisor for Reference:	Supervisor Phone Number:	
Position/Responsibilities:		
Reason For Departure:		

18. Offices Held or Ownership Interest in Other Businesses

List any affiliations you have been associated with in the past 10 years. Affiliation, for the purpose of this section, includes serving as either a board member, officer, manager, owner, partner, principal stakeholder, director or member of the organization. Organizations outside of New York State must also be disclosed.

Have you owned or operated a business or had any affiliations with the operations of a business in New York, in the USA, or in other countries? ☐ **Yes** ☑ **No**

From:	Name and Address of Business:	
To:		
Business Type:	Office Held/Nature of Interest:	☐ **open** ☐ **closed** ☐ **proposed**
Name, Address and Phone Number of Licensing/Regulatory Agency, if applicable:		

Appendix A:
Affidavit for Board Members, Officers, Managers, Owners, Partners, Principal Stakeholders, Directors, and Members

From: To:	Name and Address of Business:	
Business Type:	Office Held/Nature of Interest:	☐ open ☐ closed ☐ proposed
Name, Address and Phone Number of Licensing/Regulatory Agency, if applicable:		
From: To:	Name and Address of Business:	
Business Type:	Office Held/Nature of Interest:	☐ open ☐ closed ☐ proposed
Name, Address and Phone Number of Licensing/Regulatory Agency, if applicable:		
From: To:	Name and Address of Business:	
Business Type:	Office Held/Nature of Interest:	☐ open ☐ closed ☐ proposed
Name, Address and Phone Number of Licensing/Regulatory Agency, if applicable:		

Appendix A:
Affidavit for Board Members, Officers, Managers, Owners, Partners, Principal Stakeholders, Directors, and Members

19. Affirmative Statement of Qualifications

For individuals who have not previously served as a director/officer nor have had managerial experience, please include a statement below explaining how you are qualified to operate the proposed facility. This statement should include, but not be limited to, any relevant community/volunteer background and experience.

As indicated above, I have professional business experience that will allow me to support the successful development and operation of Citiva Medical LLC. I will bring a perspective of general business operation that I believe will complement the experience of the management team, which has the expertise in the medical marihuana industry and ancillary program elements. Although I will not be involved in the day-to-day operations, I will be available as a resource to the management team, and believe that my specific capabilities will make the Citiva team a well-balanced organization.

20. The undersigned certifies, under penalty of perjury, that the information contained herein or attached hereto is accurate, true, and complete in all material respects.

Signature:	Date: June 2, 2015
Notary Name: Teeki Hale	Notary Registration Number:
Notary (Notary Must Affix Stamp or Seal) See Attached California All Purpose Acknowledgment	Date: 6/2/2015

CALIFORNIA ALL-PURPOSE ACKNOWLEDGMENT **CIVIL CODE § 1189**

A notary public or other officer completing this certificate verifies only the identity of the individual who signed the document to which this certificate is attached, and not the truthfulness, accuracy, or validity of that document.

State of California)
County of Solano)

On 6/2/15 before me, Terri Hale,
Date *Here Insert Name and Title of the Officer*

personally appeared Erica Fraga,
Name(s) of Signer(s)

who proved to me on the basis of satisfactory evidence to be the person(s) whose name(s) is/are subscribed to the within instrument and acknowledged to me that he/she/they executed the same in his/her/their authorized capacity(ies), and that by his/her/their signature(s) on the instrument the person(s), or the entity upon behalf of which the person(s) acted, executed the instrument.

I certify under PENALTY OF PERJURY under the laws of the State of California that the foregoing paragraph is true and correct.

WITNESS my hand and official seal.

Signature _____
Signature of Notary Public

TERRI HALE
Commission # 2064108
Notary Public - California
Solano County
My Comm. Expires Apr 11, 2018

Place Notary Seal Above

OPTIONAL

Though this section is optional, completing this information can deter alteration of the document or fraudulent reattachment of this form to an unintended document.

Description of Attached Document
Title or Type of Document: Medical Marijuana Program Document Date: 6/2/15
Number of Pages: 7 Signer(s) Other Than Named Above: _____

Capacity(ies) Claimed by Signer(s)

Signer's Name:	Signer's Name:
☐ Corporate Officer — Title(s):	☐ Corporate Officer — Title(s):
☐ Partner — ☐ Limited ☐ General	☐ Partner — ☐ Limited ☐ General
☐ Individual ☐ Attorney in Fact	☐ Individual ☐ Attorney in Fact
☐ Trustee ☐ Guardian or Conservator	☐ Trustee ☐ Guardian or Conservator
☐ Other:	☐ Other:
Signer Is Representing:	Signer Is Representing:

©2014 National Notary Association • www.NationalNotary.org • 1-800-US NOTARY (1-800-876-6827) Item #5907

Appendix A:
Affidavit for Board Members, Officers, Managers, Owners, Partners, Principal Stakeholders, Directors, and Members

Appendix A **must** be completed for all board members, officers, managers, owners, partners, principal stakeholders, directors, and members. For board members, officers, managers, owners, partners, directors, and members of the applicant that are not natural persons, Appendix A must be completed by each board member, officer, manager, owner, partner, director and member of that entity, going back to the level of ownership by a natural person. **An Organizational Chart documenting your organizational structure must be included with this application.**

1. Business Name: Citiva Medical LLC

This is the name that was entered in Section A of the Application for Registration as a Registered Organization.

2. Name Geri Greene | 3 Title: Member

4. Briefly describe the role of this person or entity in the proposed registered organization:
Although I will not have an active role in the day-to-day operations, I will provide support and advice to the management team, based on my business experience.

5. Will this person or entity come into contact with medical marijuana or medical marijuana products?
☐ Yes ☒ No

Any managers who may come in contact with or handle medical marijuana, including medical marijuana products, shall be subject to a fingerprinting process as part of a criminal history background check in compliance with the procedures established by Division of Criminal Justice Services and submission of the applicable fee. Criminal history background checks must be done through Identogo at http://www.identogo.com/FP/NewYork.aspx using the ORI number NY0412500 and the Fingerprint Reason "Control Substance License."

6. Has this person or entity held any position of management or ownership during the preceding ten years of a 10% or greater interest in any other business which manufactured or distributed drugs? ☐ Yes ☒ No

If the answer to this question is yes, provide the name of the business, a statement defining the position of management or ownership held in such business, and any finding of violations of law or regulation by a governmental agency against the business or person or entity.

Appendix A:
Affidavit for Board Members, Officers, Managers, Owners, Partners, Principal Stakeholders, Directors, and Members

7. Has this person or entity been convicted of a felony or had any type of registration or license suspended or revoked in any administrative or judicial proceeding?
☐ Yes ☒ No

If the answer to either of these questions is "Yes," a statement explaining the circumstances of the felony, suspension or revocation must be provided below.

8. Phone: [redacted]		9. Fax: [redacted]	
10. Email: [redacted]			
11. Residence Address: [redacted]			
12. City: [redacted]	13. State: [redacted]	14. ZIP Code: [redacted]	

15. Formal Education		Dates Attended		Degree	
Institution	Address	From	To	Degree Received	Date Received
St. Johns University	Howard Avenue Staten Island NY	9/79	5/83	B.S. Communication Arts & Science	5/83

Appendix A:
Affidavit for Board Members, Officers, Managers, Owners, Partners, Principal Stakeholders, Directors, and Members

16. Licenses Held: List any and all licenses issued by a governmental or other regulatory entity.

Type of Professional License	License Number	Institution Granting License (Mailing Address, Phone, Email)	Effective Date	Expiration Date
		N/A		

17. Employment History for the Past 10 Years: Start with MOST RECENT employment and include employment during the last 10 years. Attach additional copies of page 3, if necessary.

Redacted pursuant to N.Y. Public Officers Law, Art.6

Appendix A:
Affidavit for Board Members, Officers, Managers, Owners, Partners, Principal Stakeholders, Directors, and Members

Street Address:		
City:	State:	Zip Code:
Starting Date of Employment:	Ending Date of Employment:	
Name of Supervisor for Reference:	Supervisor Phone Number:	
Position/Responsibilities:		
Reason For Departure:		
Name of Employer:		
Type of Business:		
Street Address:		
City:	State:	Zip Code:
Starting Date of Employment:	Ending Date of Employment:	
Name of Supervisor for Reference:	Supervisor Phone Number:	
Position/Responsibilities:		
Reason For Departure:		
Name of Employer:		
Type of Business:		
Street Address:		
City:	State:	Zip Code:
Starting Date of Employment:	Ending Date of Employment:	
Name of Supervisor for Reference:	Supervisor Phone Number:	
Position/Responsibilities:		
Reason For Departure:		
Name of Employer:		

Appendix A:
Affidavit for Board Members, Officers, Managers, Owners, Partners, Principal Stakeholders, Directors, and Members

Type of Business:		
Street Address:		
City:	State:	Zip Code:
Starting Date of Employment:	Ending Date of Employment:	
Name of Supervisor for Reference:	Supervisor Phone Number:	
Position/Responsibilities:		
Reason For Departure:		
Name of Employer:	Type of Business:	
Street Address:		
City:	State:	Zip Code:
Starting Date of Employment:	Ending Date of Employment:	
Name of Supervisor for Reference:	Supervisor Phone Number:	
Position/Responsibilities:		
Reason For Departure:		

18. Offices Held or Ownership Interest in Other Businesses

List any affiliations you have been associated with in the past 10 years. Affiliation, for the purpose of this section, includes serving as either a board member, officer, manager, owner, partner, principal stakeholder, director or member of the organization. Organizations outside of New York State must also be disclosed.

Have you owned or operated a business or had any affiliations with the operations of a business in New York, in the USA, or in other countries? ☐ Yes ☑ No

From:	Name and Address of Business:	
To:		
Business Type:	Office Held/Nature of Interest:	☐ open ☐ closed ☐ proposed
Name, Address and Phone Number of Licensing/Regulatory Agency, if applicable:		

Appendix A:
Affidavit for Board Members, Officers, Managers, Owners, Partners, Principal Stakeholders, Directors, and Members

From: To:	Name and Address of Business:	
Business Type:	Office Held/Nature of Interest:	☐open ☐closed ☐proposed
Name, Address and Phone Number of Licensing/Regulatory Agency, if applicable:		
From: To:	Name and Address of Business:	
Business Type:	Office Held/Nature of Interest:	☐open ☐closed ☐proposed
Name, Address and Phone Number of Licensing/Regulatory Agency, if applicable:		
From: To:	Name and Address of Business:	
Business Type:	Office Held/Nature of Interest:	☐open ☐closed ☐proposed
Name, Address and Phone Number of Licensing/Regulatory Agency, if applicable:		

Appendix A:
Affidavit for Board Members, Officers, Managers, Owners, Partners, Principal Stakeholders, Directors, and Members

19. Affirmative Statement of Qualifications

For individuals who have not previously served as a director/officer nor have had managerial experience, please include a statement below explaining how you are qualified to operate the proposed facility. This statement should include, but not be limited to, any relevant community/volunteer background and experience.

As indicated above, I have professional business experience that will allow me to support the successful development and operation of Citiva Medical LLC. I will bring a perspective of general business operation that I believe will complement the experience of the management team, which has the expertise in the medical marihuana industry and ancillary program elements. Although I will not be involved in day-to-day operations, I will be available as a resource to the management team, and believe that my specific capabilities will make the Citiva team a well-balanced organization.

20. The undersigned certifies, under penalty of perjury, that the information contained herein or attached hereto is accurate, true, and complete in all material respects.

Signature: [signature]	Date: 6-1-15
Notary Name: BRENDAN DOWD	Notary Registration Number:
Notary (Notary Must Affix Stamp or Seal) [signature] BRENDAN R DOWD Notary Public State of New Jersey My Commission Expires Sep 9, 2016	Date: 06-01-2015

NEW YORK STATE | Department of Health

Medical Marijuana Program
Application for Registration as a Registered Organization

Appendix A:
Affidavit for Board Members, Officers, Managers, Owners, Partners, Principal Stakeholders, Directors, and Members

Appendix A **must** be completed for all board members, officers, managers, owners, partners, principal stakeholders, directors, and members. For board members, officers, managers, owners, partners, directors, and members of the applicant that are not natural persons, Appendix A must be completed by each board member, officer, manager, owner, partner, director and member of that entity, going back to the level of ownership by a natural person. **An Organizational Chart documenting your organizational structure must be included with this application.**

1. Business Name: Citiva Medical LLC

This is the name that was entered in Section A of the Application for Registration as a Registered Organization.

2. Name: George Lewis | 3. Title: EVP Fin and Admin

4. Briefly describe the role of this person or entity in the proposed registered organization:

Software configuration, setup and training, HR admin and possibly labor negotiations.

5. Will this person or entity come into contact with medical marijuana or medical marijuana products?
☐ Yes ☑ No

Any managers who may come in contact with or handle medical marijuana, including medical marijuana products, shall be subject to a fingerprinting process as part of a criminal history background check in compliance with the procedures established by Division of Criminal Justice Services and submission of the applicable fee. Criminal history background checks must be done through Identogo at http://www.identogo.com/FP/NewYork.aspx using the ORI number NY0412500 and the Fingerprint Reason "Control Substance License."

6. Has this person or entity held any position of management or ownership during the preceding ten years of a 10% or greater interest in any other business which manufactured or distributed drugs? ☐ Yes ☑ No

If the answer to this question is yes, provide the name of the business, a statement defining the position of management or ownership held in such business, and any finding of violations of law or regulation by a governmental agency against the business or person or entity.

Appendix A:
Affidavit for Board Members, Officers, Managers, Owners, Partners, Principal Stakeholders, Directors, and Members

7. Has this person or entity been convicted of a felony or had any type of registration or license suspended or revoked in any administrative or judicial proceeding?
☐ Yes ☑ No

If the answer to either of these questions is "Yes," a statement explaining the circumstances of the felony, suspension or revocation must be provided below.

8. Phone: [redacted]	9. Fax:
10. Email: glewis@citivamedical.com	
11. Residence Address [redacted]	
12. City: [redacted]	13. State: [redacted] 14. ZIP Code: [redacted]

15. Formal Education		Dates Attended		Degree	
Institution	Address	From	To	Degree Received	Date Received
Duke University	Durham, NC	8/82	6/86	B.S. Computer Sci.	6/86
University of Chicago School of Business	Chicago, IL	9/91	5/93	M.B.A. Finance & Marketing	5/93
Keller Graduate School	Oakland, CA	8/07	3/09	M.A.F.M. (Masters in Acctg. and Financial Mgmt.	3/09

Appendix A:
Affidavit for Board Members, Officers, Managers, Owners, Partners, Principal Stakeholders, Directors, and Members

16. Licenses Held: List any and all licenses issued by a governmental or other regulatory entity.

Type of Professional License	License Number	Institution Granting License (Mailing Address, Phone, Email)	Effective Date	Expiration Date
C.P.A.	119995	California Board of Accountancy 2000 Evergreen Street - Suite 250 Sacramento, CA 95815	8/2013	6/30/16
		(916) 263-3680		

17. Employment History for the Past 10 Years: Start with MOST RECENT employment and include employment during the last 10 years. Attach additional copies of page 3, if necessary.

Redacted pursuant to N.Y. Public Officers Law, Art.6

Appendix A:

Affidavit for Board Members, Officers, Managers, Owners, Partners, Principal Stakeholders, Directors, and Members

Redacted pursuant to N.Y. Public Officers Law, Art.6

Appendix A:
Affidavit for Board Members, Officers, Managers, Owners, Partners, Principal Stakeholders, Directors, and Members

Redacted pursuant to N.Y. Public Officers Law, Art.6

18. Offices Held or Ownership Interest in Other Businesses List any affiliations you have been associated with in the past 10 years. Affiliation, for the purpose of this section, includes serving as either a board member, officer, manager, owner, partner, principal stakeholder, director or member of the organization. Organizations outside of New York State must also be disclosed.		
Have you owned or operated a business or had any affiliations with the operations of a business in New York, in the USA, or in other countries? ☐ Yes ☑ No		
From:	Name and Address of Business:	
To:		
Business Type:	Office Held/Nature of Interest:	☐ open ☐ closed ☐ proposed
Name, Address and Phone Number of Licensing/Regulatory Agency, if applicable:		

Appendix A:
Affidavit for Board Members, Officers, Managers, Owners, Partners, Principal Stakeholders, Directors, and Members

From To	Name and Address of Business	
Business Type:	Office Held/Nature of Interest	☐open ☐closed ☐proposed
Name, Address and Phone Number of Licensing/Regulatory Agency, if applicable		
From: To:	Name and Address of Business:	
Business Type:	Office Held/Nature of Interest:	☐open ☐closed ☐proposed
Name, Address and Phone Number of Licensing/Regulatory Agency, if applicable:		
From To	Name and Address of Business	
Business Type:	Office Held/Nature of Interest	☐open ☐closed ☐proposed
Name, Address and Phone Number of Licensing/Regulatory Agency, if applicable		

Appendix A:
Affidavit for Board Members, Officers, Managers, Owners, Partners, Principal Stakeholders, Directors, and Members

19. Affirmative Statement of Qualifications

For individuals who have not previously served as a director/officer nor have had managerial experience, please include a statement below explaining how you are qualified to operate the proposed facility. This statement should include, but not be limited to, any relevant community/volunteer background and experience.

Please refer to my attached biography, which details my experience and capability to play an important role in the operation of the Registered Organization.

20. The undersigned certifies, under penalty of perjury, that the information contained herein or attached hereto is accurate, true, and complete in all material respects.

Signature:	Date: 6-1-15
Notary Name: RICHARD M SHIRLEY	Notary Registration Number: CA 2065750
Notary (Notary Must Affix Stamp or Seal)	Date: 6-1-15

RICHARD M. SHIRLEY
Commission # 2065750
Notary Public - California
Solano County
My Comm. Expires May 23, 2018

George Lewis, Executive VP Finance and Administration

George is a 25 year veteran of branded CPG (consumer product goods). After graduating from Duke University and later receiving his MBA from University of Chicago [redacted]

He brings to Citiva those decades of best-in-class operational finance experience managing manufacturing and distribution costs in branded, high volume environments. George has managed three top-tier manufacturing ERP system installations and integrations including employee training and testing. He will establish strong internal financial and operational controls that meet or exceed all requirements while insuring consistent access to high-quality medicine.

NEW YORK STATE | Department of Health

Medical Marijuana Program
Application for Registration as a Registered Organization

Appendix A:
Affidavit for Board Members, Officers, Managers, Owners, Partners, Principal Stakeholders, Directors, and Members

Appendix A **must** be completed for all board members, officers, managers, owners, partners, principal stakeholders, directors, and members. For board members, officers, managers, owners, partners, directors, and members of the applicant that are not natural persons, Appendix A must be completed by each board member, officer, manager, owner, partner, director and member of that entity, going back to the level of ownership by a natural person. **An Organizational Chart documenting your organizational structure must be included with this application.**

1. Business Name: Citiva Medical LLC

This is the name that was entered in Section A of the Application for Registration as a Registered Organization.

2. Name: Michael Mazza | 3. Title: [redacted] Member

4. Briefly describe the role of this person or entity in the proposed registered organization:

Although I will not have an active role in the day-to-day operations, I will provide support and advice to the management team, based on my business experience.

5. Will this person or entity come into contact with medical marijuana or medical marijuana products?
☐ Yes ◉ No

Any managers who may come in contact with or handle medical marijuana, including medical marijuana products, shall be subject to a fingerprinting process as part of a criminal history background check in compliance with the procedures established by Division of Criminal Justice Services and submission of the applicable fee. Criminal history background checks must be done through Identogo at http://www.identogo.com/FP/NewYork.aspx using the ORI number NY0412500 and the Fingerprint Reason "Control Substance License."

6. Has this person or entity held any position of management or ownership during the preceding ten years of a 10% or greater interest in any other business which manufactured or distributed drugs? ☐ Yes ◉ No

If the answer to this question is yes, provide the name of the business, a statement defining the position of management or ownership held in such business, and any finding of violations of law or regulation by a governmental agency against the business or person or entity.

NEW YORK STATE | Department of Health

Medical Marijuana Program
Application for Registration as a Registered Organization

Appendix A:
Affidavit for Board Members, Officers, Managers, Owners, Partners, Principal Stakeholders, Directors, and Members

7. Has this person or entity been convicted of a felony or had any type of registration or license suspended or revoked in any administrative or judicial proceeding?
☐ Yes ☉ No

If the answer to either of these questions is "Yes," a statement explaining the circumstances of the felony, suspension or revocation must be provided below.

8. Phone: [redacted]	9. Fax:
10. Email: [redacted]	
11. Residence Address: [redacted]	
12. City: [redacted]	13. State: [redacted] 14. ZIP Code: [redacted]

15. Formal Education		Dates Attended		Degree	
Institution	Address	From	To	Degree Received	Date Received
Hunter College	695 Park Ave N.Y.N.Y. 10065	Jan 198	Jun 198	none	
S.I. College	2800 Victory Blvd. S.I.N.Y 10314	Sep 198	Jun 198	none	
[redacted]					

NEW YORK STATE | Department of Health

Medical Marijuana Program
Application for Registration as a Registered Organization

Appendix A:
Affidavit for Board Members, Officers, Managers, Owners, Partners, Principal Stakeholders, Directors, and Members

16. Licenses Held: List any and all licenses issued by a governmental or other regulatory entity.

Type of Professional License	License Number	Institution Granting License (Mailing Address, Phone, Email)	Effective Date	Expiration Date
		N/A		

17. Employment History for the Past 10 Years: Start with MOST RECENT employment and include employment during the last 10 years. Attach additional copies of page 3, if necessary.

Name of Employer: NY Fire Department

Type of Business: Fire Department

Street Address: 9 Metro Tech Center

City: Brooklyn | State: NY | Zip Code: 11201

Starting Date of Employment: Dec. 1989 | Ending Date of Employment: March 1998

Name of Supervisor for Reference: | Supervisor Phone Number:

Position/Responsibilities:
Firefighter Fighting fires, first aid, building inspections

Reason For Departure: [redacted]

Name of Employer: NY Police Department

Type of Business: Police Dept.

NEW YORK STATE | Department of Health

Medical Marijuana Program
Application for Registration as a Registered Organization

Appendix A:
Affidavit for Board Members, Officers, Managers, Owners, Partners, Principal Stakeholders, Directors, and Members

Street Address: 1 Police Plaza		
City: NY	State: NY	Zip Code: 10038
Starting Date of Employment: July 1983	Ending Date of Employment: Dec. 1989	
Name of Supervisor for Reference:	Supervisor Phone Number:	
Position/Responsibilities: Police Officer and Undercover Narcotics Agent Radio runs, fight crime, first aid.		
Reason For Departure: [redacted]		
Name of Employer:		
Type of Business:		
Street Address:		
City:	State:	Zip Code:
Starting Date of Employment:	Ending Date of Employment:	
Name of Supervisor for Reference:	Supervisor Phone Number:	
Position/Responsibilities:		
Reason For Departure:		
Name of Employer:		
Type of Business:		
Street Address:		
City:	State:	Zip Code:
Starting Date of Employment:	Ending Date of Employment:	
Name of Supervisor for Reference:	Supervisor Phone Number:	
Position/Responsibilities:		
Reason For Departure:		
Name of Employer:		

NEW YORK STATE | Department of Health

Medical Marijuana Program
Application for Registration as
a Registered Organization

Appendix A:
Affidavit for Board Members, Officers, Managers, Owners, Partners, Principal Stakeholders, Directors, and Members

Type of Business:		
Street Address:		
City:	State:	Zip Code:
Starting Date of Employment:	Ending Date of Employment:	
Name of Supervisor for Reference:	Supervisor Phone Number:	
Position/Responsibilities:		
Reason For Departure:		
Name of Employer:	Type of Business:	
Street Address:		
City:	State:	Zip Code:
Starting Date of Employment:	Ending Date of Employment:	
Name of Supervisor for Reference:	Supervisor Phone Number:	
Position/Responsibilities:		
Reason For Departure:		

18. Offices Held or Ownership Interest in Other Businesses

List any affiliations you have been associated with in the past 10 years. Affiliation, for the purpose of this section, includes serving as either a board member, officer, manager, owner, partner, principal stakeholder, director or member of the organization. Organizations outside of New York State must also be disclosed.

Have you owned or operated a business or had any affiliations with the operations of a business in New York, in the USA, or in other countries? ◯ Yes ◉ No

From:	Name and Address of Business:	
To:		
Business Type:	Office Held/Nature of Interest:	◯ open ◯ closed ◯ proposed
Name, Address and Phone Number of Licensing/Regulatory Agency, if applicable:		

Appendix A:
Affidavit for Board Members, Officers, Managers, Owners, Partners, Principal Stakeholders, Directors, and Members

From: To:	Name and Address of Business:	
Business Type:	Office Held/Nature of Interest:	☐ open ☐ closed ☐ proposed
Name, Address and Phone Number of Licensing/Regulatory Agency, if applicable:		
From: To:	Name and Address of Business:	
Business Type:	Office Held/Nature of Interest:	☐ open ☐ closed ☐ proposed
Name, Address and Phone Number of Licensing/Regulatory Agency, if applicable:		
From: To:	Name and Address of Business:	
Business Type:	Office Held/Nature of Interest:	☐ open ☐ closed ☐ proposed
Name, Address and Phone Number of Licensing/Regulatory Agency, if applicable:		

Appendix A:
Affidavit for Board Members, Officers, Managers, Owners, Partners, Principal Stakeholders, Directors, and Members

19. Affirmative Statement of Qualifications

For individuals who have not previously served as a director/officer nor have had managerial experience, please include a statement below explaining how you are qualified to operate the proposed facility. This statement should include, but not be limited to, any relevant community/volunteer background and experience.

As indicated above, I have professional business experience that will allow me to support the successful development and operation of Citiva Medical LLC. I will bring a perspective of general business operation that I believe will complement the experience of the management team, which has the expertise in the medical marihuana industry and ancillary program elements. Although I will not be involved in day-to-day operations, I will be available as a resource to the management team, and believe that my specific capabilities will make the Citiva team a well-balanced organization.

20. The undersigned certifies, under penalty of perjury, that the information contained herein or attached hereto is accurate, true, and complete in all material respects.

Signature: [signature]	Date: June 2, 2015
Notary Name: [signature]	Notary Registration Number: 2013478
Notary (Notary Must Affix Stamp or Seal)	Date: 6/2/15

PAUL W. PEDERSON
NOTARY PUBLIC - CALIFORNIA
COMMISSION # 2013478
LOS ANGELES COUNTY
My Comm. Exp. April 16, 2017

NEW YORK STATE | Department of Health

Medical Marijuana Program
Application for Registration as a Registered Organization

Appendix A:
Affidavit for Board Members, Officers, Managers, Owners, Partners, Principal Stakeholders, Directors, and Members

Appendix A must be completed for all board members, officers, managers, owners, partners, principal stakeholders, directors, and members. For board members, officers, managers, owners, partners, directors, and members of the applicant that are not natural persons, Appendix A must be completed by each board member, officer, manager, owner, partner, director and member of that entity, going back to the level of ownership by a natural person. An Organizational Chart documenting your organizational structure must be included with this application.

1. Business Name: Citiva Medical LLC

This is the name that was entered in Section A of the Application for Registration as a Registered Organization.

2. Name: Thomas MAZZA | 3. Title: Member

4. Briefly describe the role of this person or entity in the proposed registered organization:
Although I will not have an active role in the day-to-day operations, I will provide support and advice to the management team, based on my business experience.

5. Will this person or entity come into contact with medical marijuana or medical marijuana products?
☐ Yes ☒ No

Any managers who may come in contact with or handle medical marijuana, including medical marijuana products, shall be subject to a fingerprinting process as part of a criminal history background check in compliance with the procedures established by Division of Criminal Justice Services and submission of the applicable fee. Criminal history background checks must be done through Identogo at: http://www.identogo.com/FP/NewYork.aspx using the ORI number NY0412500 and the Fingerprint Reason "Control Substance Licence."

6. Has this person or entity held any position of management or ownership during the preceding ten years of a 10% or greater interest in any other business which manufactured or distributed drugs? ☐ Yes ☒ No

If the answer to this question is yes, provide the name of the business, a statement defining the position of management or ownership held in such business, and any finding of violations of law or regulation by a governmental agency against the business or person or entity.

NEW YORK STATE | Department of Health

Medical Marijuana Program
Application for Registration as a Registered Organization

Appendix A:
Affidavit for Board Members, Officers, Managers, Owners, Partners, Principal Stakeholders, Directors, and Members

7. Has this person or entity been convicted of a felony or had any type of registration or license suspended or revoked in any administrative or judicial proceeding?
☐ Yes ☒ No

If the answer to either of these questions is "Yes," a statement explaining the circumstances of the felony, suspension or revocation must be provided below.

8. Phone: [redacted]		9. Fax:	
10. Email: [redacted]			
11. Residence Address: [redacted]			
12. City: [redacted]	13. State: [redacted]	14. ZIP Code: [redacted]	

15. Formal Education		Dates Attended		Degree	
Institution	Address	From	To	Degree Received	Date Received
St Joseph By The Sea H.S.	Hyland Blvd S.I. N.Y.	1975	1979	H.S. Diploma	6/79
U.S. NAVY	Boot Camp, Radioman A school, Morse code school	1979	1981	Certifications in all	1979-81
NYC Police Dept.	20 St N.Y. N.Y.	1983	1985	Police Academy	1983
NYC FIRE DEPT	Randalls Isl N.Y.	1985	1998	FIRE ACADEMY	1985
NYC FIRE DEPT	9 METROTECH Brooklyn N.Y.	1998	2002	FIRE MARSHAL ACADEMY	1998

NEW YORK STATE | Department of Health

Medical Marijuana Program
Application for Registration as a Registered Organization

Appendix A:
Affidavit for Board Members, Officers, Managers, Owners, Partners, Principal Stakeholders, Directors, and Members

16. Licenses Held: List any and all licenses issued by a governmental or other regulatory entity.

Type of Professional License	License Number	Institution Granting License (Mailing Address, Phone, Email)	Effective Date	Expiration Date
Drivers License	[redacted]	STATE OF COLORADO	09/01/12	10/27/17
Concealed Handgun		STATE OF COLORADO	06/26/14	06/26/19

17. Employment History for the Past 10 Years: Start with MOST RECENT employment and include employment during the last 10 years. Attach additional copies of page 3, if necessary.

Redacted pursuant to N.Y. Public Officers Law, Art.6

Appendix A:
Affidavit for Board Members, Officers, Managers, Owners, Partners, Principal Stakeholders, Directors, and Members

Street Address:		
City:	State:	Zip Code:
Starting Date of Employment:	Ending Date of Employment:	
Name of Supervisor for Reference:	Supervisor Phone Number:	
Position/Responsibilities:		
Reason For Departure:		
Name of Employer:		
Type of Business:		
Street Address:		
City:	State:	Zip Code:
Starting Date of Employment:	Ending Date of Employment:	
Name of Supervisor for Reference:	Supervisor Phone Number:	
Position/Responsibilities:		
Reason For Departure:		
Name of Employer:		
Type of Business:		
Street Address:		
City:	State:	Zip Code:
Starting Date of Employment:	Ending Date of Employment:	
Name of Supervisor for Reference:	Supervisor Phone Number:	
Position/Responsibilities:		
Reason For Departure:		
Name of Employer:		

NEW YORK STATE | Department of Health

Medical Marijuana Program
Application for Registration as a Registered Organization

Appendix A:
Affidavit for Board Members, Officers, Managers, Owners, Partners, Principal Stakeholders, Directors, and Members

Type of Business:		
Street Address:		
City:	State:	Zip Code:
Starting Date of Employment:	Ending Date of Employment:	
Name of Supervisor for Reference:	Supervisor Phone Number:	
Position/Responsibilities:		
Reason For Departure:		
Name of Employer:	Type of Business:	
Street Address:		
City:	State:	Zip Code:
Starting Date of Employment:	Ending Date of Employment:	
Name of Supervisor for Reference:	Supervisor Phone Number:	
Position/Responsibilities:		
Reason For Departure:		

18. Offices Held or Ownership Interest in Other Businesses

List any affiliations you have been associated with in the past 10 years. Affiliation, for the purpose of this section, includes serving as either a board member, officer, manager, owner, partner, principal stakeholder, director or member of the organization. Organizations outside of New York State must also be disclosed.

Have you owned or operated a business or had any affiliations with the operations of a business in New York, in the USA, or in other countries? ☒ Yes ☐ No

Redacted pursuant to N.Y. Public Officers Law, Art.6

Appendix A:
Affidavit for Board Members, Officers, Managers, Owners, Partners, Principal Stakeholders, Directors, and Members

From: To:	Name and Address of Business:	
Business Type:	Office Held/Nature of Interest:	☐open ☐closed ☐proposed
Name, Address and Phone Number of Licensing/Regulatory Agency, if applicable:		
From: To:	Name and Address of Business:	
Business Type:	Office Held/Nature of Interest:	☐open ☐closed ☐proposed
Name, Address and Phone Number of Licensing/Regulatory Agency, if applicable:		
From: To:	Name and Address of Business:	
Business Type:	Office Held/Nature of Interest:	☐open ☐closed ☐proposed
Name, Address and Phone Number of Licensing/Regulatory Agency, if applicable:		

Appendix A:
Affidavit for Board Members, Officers, Managers, Owners, Partners, Principal Stakeholders, Directors, and Members

19. Affirmative Statement of Qualifications

For individuals who have not previously served as a director/officer nor have had managerial experience, please include a statement below explaining how you are qualified to operate the proposed facility. This statement should include, but not be limited to, any relevant community/volunteer background and experience.

As indicated above, I have professional business experience that will allow me to support the successful development and operation of Citiva Medical LLC. I will bring a perspective of general business operation that I believe will complement the experience of the management team, which has the expertise in the medical marihuana industry and ancillary program elements. Although I will not be involved in day-to-day operations, I will be available as a resource to the management team, and believe that my specific capabilities will make the Citiva team a well-balanced organization.

20. The undersigned certifies, under penalty of perjury, that the information contained herein or attached hereto is accurate, true, and complete in all material respects.

Signature:	Date: 6/1/15
Notary Name: Yuhwen Seah	Notary Registration Number: 20094041592
Notary (Notary Must Affix Stamp or Seal)	Date: 6/1/2015

YUHWEN SEAH
NOTARY PUBLIC
STATE OF COLORADO
NOTARY ID 20094041592
My Commission Expires December 22, 2017

Appendix A:
Affidavit for Board Members, Officers, Managers, Owners, Partners, Principal Stakeholders, Directors, and Members

Appendix A **must** be completed for all board members, officers, managers, owners, partners, principal stakeholders, directors, and members. For board members, officers, managers, owners, partners, directors, and members of the applicant that are not natural persons, Appendix A must be completed by each board member, officer, manager, owner, partner, director and member of that entity, going back to the level of ownership by a natural person. **An Organizational Chart documenting your organizational structure must be included with this application.**

1. Business Name: Citiva Medical LLC

This is the name that was entered in Section A of the Application for Registration as a Registered Organization.

2. Name: David J. Palmieri | 3. Title: Chief Marketing Officer

4. Briefly describe the role of this person or entity in the proposed registered organization:

My Healthcare consulting firm, Clinical Therapeutic Technologies LLC, seeks out emerging technologies and clinical interventions that are scientifically based and assists clinical practices with deployment and implementation. Our goals are to assist the medical community in increasing their arsenal of clinical tools helping patients while increasing patient function with minimal side effects and decreasing overall costs to both the patient and the insurance carrier. Our goals are aimed at attempting to decrease patient's dependency on drug intervention, surgery and multiple clinical therapies with the inclusion of emerging scientifically based options.

5. Will this person or entity come into contact with medical marijuana or medical marijuana products?
☐ Yes ☒ No

Any managers who may come in contact with or handle medical marijuana, including medical marijuana products, shall be subject to a fingerprinting process as part of a criminal history background check in compliance with the procedures established by Division of Criminal Justice Services and submission of the applicable fee. Criminal history background checks must be done through Identogo at http://www.identogo.com/FP/NewYork.aspx using the ORI number NY0412500 and the Fingerprint Reason "Control Substance License."

6. Has this person or entity held any position of management or ownership during the preceding ten years of a 10% or greater interest in any other business which manufactured or distributed drugs? ☐ Yes ☒ No

If the answer to this question is yes, provide the name of the business, a statement defining the position of management or ownership held in such business, and any finding of violations of law or regulation by a governmental agency against the business or person or entity.

Appendix A:
Affidavit for Board Members, Officers, Managers, Owners, Partners, Principal Stakeholders, Directors, and Members

7. Has this person or entity been convicted of a felony or had any type of registration or license suspended or revoked in any administrative or judicial proceeding?
☐ Yes ☒ No

If the answer to either of these questions is "Yes," a statement explaining the circumstances of the felony, suspension or revocation must be provided below.

8. Phone: [redacted]			9. Fax [redacted]		
10. Email: [redacted]					
11. Residence Address: [redacted]					
12. City: [redacted]		13. State: [redacted]		14. ZIP Code: [redacted]	
15. Formal Education		Dates Attended		Degree	
Institution	Address	From	To	Degree Received	Date Received
New York Chiropractic College	2360 NY-89 Seneca Falls, NY 13148	1/1985	3/1988	D.C.	4/10/1988
Attended Wagner College and was granted a degree from The University of the State of New York	1 Campus Road Staten Island, NY 10301	9/1982	9/1984	B.S.	5/23/1987

Appendix A:
Affidavit for Board Members, Officers, Managers, Owners, Partners, Principal Stakeholders, Directors, and Members

16. Licenses Held: List any and all licenses issued by a governmental or other regulatory entity.

Type of Professional License	License Number	Institution Granting License (Mailing Address, Phone, Email)	Effective Date	Expiration Date
Chiropractic License	X005499-1	NYS Department of Education	5/1988	9/2006

17. Employment History for the Past 10 Years: Start with MOST RECENT employment and include employment during the last 10 years. Attach additional copies of page 3, if necessary.

Redacted pursuant to N.Y. Public Officers Law, Art.6

Appendix A:

Affidavit for Board Members, Officers, Managers, Owners, Partners, Principal Stakeholders, Directors, and Members

Redacted pursuant to N.Y. Public Officers Law, Art.6

Name of Employer:		
Type of Business:		
Street Address:		
City:	State:	Zip Code:
Starting Date of Employment:	Ending Date of Employment:	
Name of Supervisor for Reference:	Supervisor Phone Number:	
Position/Responsibilities:		
Reason For Departure:		
Name of Employer:		
Type of Business:		
Street Address:		
City:	State:	Zip Code:
Starting Date of Employment:	Ending Date of Employment:	
Name of Supervisor for Reference:	Supervisor Phone Number:	
Position/Responsibilities:		
Reason For Departure:		
Name of Employer:		

Appendix A:
Affidavit for Board Members, Officers, Managers, Owners, Partners, Principal Stakeholders, Directors, and Members

Type of Business:		
Street Address:		
City:	State:	Zip Code:
Starting Date of Employment:	Ending Date of Employment:	
Name of Supervisor for Reference:	Supervisor Phone Number:	
Position/Responsibilities:		
Reason For Departure:		
Name of Employer:	Type of Business:	
Street Address:		
City:	State:	Zip Code:
Starting Date of Employment:	Ending Date of Employment:	
Name of Supervisor for Reference:	Supervisor Phone Number:	
Position/Responsibilities:		
Reason For Departure:		

18. Offices Held or Ownership Interest in Other Businesses

List any affiliations you have been associated with in the past 10 years. Affiliation, for the purpose of this section, includes serving as either a board member, officer, manager, owner, partner, principal stakeholder, director or member of the organization. Organizations outside of New York State must also be disclosed.

Have you owned or operated a business or had any affiliations with the operations of a business in New York, in the USA, or in other countries? ☒ Yes ☐ No

From: 2005	Name and Address of Business: Palmieri Associates LLC 3077 Hylan Blvd., Staten Island, NY 10306	
To: Present		
Business Type: Real Estate Holding Corp.	Office Held/Nature of Interest: Investment – [redacted]wnership	☒ open ☐ closed ☐ proposed

Name, Address and Phone Number of Licensing/Regulatory Agency, if applicable:
N/A

Appendix A:
Affidavit for Board Members, Officers, Managers, Owners, Partners, Principal Stakeholders, Directors, and Members

From: 2012 To: Present	Name and Address of Business: DJ Palm Properties LLC	
Business Type: Real Estate Holding company	Office Held/Nature of Interest: Investment - [redacted]ownership	☒ open ☐ closed ☐ proposed
Name, Address and Phone Number of Licensing/Regulatory Agency, if applicable: N/A		
From: To:	Name and Address of Business:	
Business Type:	Office Held/Nature of Interest:	☐ open ☐ closed ☐ proposed
Name, Address and Phone Number of Licensing/Regulatory Agency, if applicable:		
From: To:	Name and Address of Business:	
Business Type:	Office Held/Nature of Interest:	☐ open ☐ closed ☐ proposed
Name, Address and Phone Number of Licensing/Regulatory Agency, if applicable:		

Appendix A:
Affidavit for Board Members, Officers, Managers, Owners, Partners, Principal Stakeholders, Directors, and Members

19. Affirmative Statement of Qualifications

For individuals who have not previously served as a director/officer nor have had managerial experience, please include a statement below explaining how you are qualified to operate the proposed facility. This statement should include, but not be limited to, any relevant community/volunteer background and experience.

Please refer to my attached biography, which details my experience and capability to play an important role in the operation of the Registered Organization.

20. The undersigned certifies, under penalty of perjury, that the information contained herein or attached hereto is accurate, true, and complete in all material respects.

Signature:	Date: 6/01/15
Notary Name: JAYANT C. PATEL	Notary Registration Number: 01PA4901007
Notary (Notary Must Affix Stamp or Seal) JAYANT C. PATEL Notary Public, State of New York No. 01PA4901007 Qualified in Queens County Certificate Filed in New York County Commission Expires July 13, 2015	Date: 06/01/2015

David Palmieri, Chief Marketing Officer

David Palmieri is a New York City Healthcare Consultant. As a native New Yorker, David studied at Wagner College and Polytech University of New York and earned a Bachelor of Science Degree from The State University of New York. He earned a Doctorate of Chiropractic degree from New York Chiropractic College and developed a multi-discipline approach to spinal pain working with a number of well-respected rehabilitation, neurological and orthopedic physicians in his community.

Since 1988 David Palmieri has developed and managed multidisciplinary medical teams in the implementation of new emerging medical technologies that meet the needs of suffering patients in New York State. David always had a special interest in human biological systems, clinical healthcare and emerging medical technologies. [redacted] David's interest in newly developing non-narcotic, non-invasive technologies grew significantly. He has spent countless hours researching standard protocol treatments as well as new emerging treatments for related illnesses. Always working closely with medical doctors and personnel to provide individualized health care to patients.

In 2004, David published a book, A Last Stand, An American Tragedy, under the pen name David James. It told a personal journey of his search to help a dying family member which threw him into the world of the politics of cancer research and the trial and tribulations that independent scientists and emerging clinical innovation must endure to bring new treatment protocols into mainstream healthcare. In 2005, David retired from clinical practice and continued his interest in non-invasive and non-narcotic clinical interventions for suffering patients. [redacted]

NEW YORK STATE | Department of Health

Medical Marijuana Program
Application for Registration as a Registered Organization

Appendix A:
Affidavit for Board Members, Officers, Managers, Owners, Partners, Principal Stakeholders, Directors, and Members

Appendix A **must** be completed for all board members, officers, managers, owners, partners, principal stakeholders, directors, and members. For board members, officers, managers, owners, partners, directors, and members of the applicant that are not natural persons, Appendix A must be completed by each board member, officer, manager, owner, partner, director and member of that entity, going back to the level of ownership by a natural person. **An Organizational Chart documenting your organizational structure must be included with this application.**

1. Business Name: Citiva Medical LLC

This is the name that was entered in Section A of the Application for Registration as a Registered Organization.

2. Name: Christopher Perez | 3 Title: MD Advisor/Member

4. Briefly describe the role of this person or entity in the proposed registered organization:

Based on my medical experience, I will provide advice and consultation to the management team regarding the clinical operations of the organization.

5. Will this person or entity come into contact with medical marijuana or medical marijuana products?
☐ Yes ☒ No

Any managers who may come in contact with or handle medical marijuana, including medical marijuana products, shall be subject to a fingerprinting process as part of a criminal history background check in compliance with the procedures established by Division of Criminal Justice Services and submission of the applicable fee. Criminal history background checks must be done through Identogo at http://www.identogo.com/FP/NewYork.aspx using the ORI number NY0412500 and the Fingerprint Reason "Control Substance License."

6. Has this person or entity held any position of management or ownership during the preceding ten years of a 10% or greater interest in any other business which manufactured or distributed drugs? ☐ Yes ☒ No

If the answer to this question is yes, provide the name of the business, a statement defining the position of management or ownership held in such business, and any finding of violations of law or regulation by a governmental agency against the business or person or entity.

Appendix A:
Affidavit for Board Members, Officers, Managers, Owners, Partners, Principal Stakeholders, Directors, and Members

7. Has this person or entity been convicted of a felony or had any type of registration or license suspended or revoked in any administrative or judicial proceeding?
☐ Yes ☒ No

If the answer to either of these questions is "Yes," a statement explaining the circumstances of the felony, suspension or revocation must be provided below.

8. Phone: [redacted]		9. Fax: [redacted]	
10. Email: [redacted]			
11. Residence Address: [redacted]			
12. City: [redacted]	13. State: [redacted]	14. ZIP Code: [redacted]	

15. Formal Education		Dates Attended		Degree	
Institution	Address	From	To	Degree Received	Date Received
Brooklyn College	2900 Bedford Ave Brooklyn, NY 11210	9/87	1/90	BS - Biology	1990
St Georges University School of Medicine	St Georges, Grenada	9/94	5/98	MD	1998

Appendix A:
Affidavit for Board Members, Officers, Managers, Owners, Partners, Principal Stakeholders, Directors, and Members

16. Licenses Held: List any and all licenses issued by a governmental or other regulatory entity.

Type of Professional License	License Number	Institution Granting License (Mailing Address, Phone, Email)	Effective Date	Expiration Date
DEA	[redacted]	Drug Enforcement Agency Office of Diversion Control 8701 Morrissette Drive Springfield, VA 22152	3/31/14	3/31/17
NYS Medical License	225293	NY State Department of Education (518) 474-3852	6/30/2012	6/30/2015

17. Employment History for the Past 10 Years: Start with MOST RECENT employment and include employment during the last 10 years. Attach additional copies of page 3, if necessary

Redacted pursuant to N.Y. Public Officers Law, Art.6

Appendix A:
Affidavit for Board Members, Officers, Managers, Owners, Partners, Principal Stakeholders, Directors, and Members
Redacted pursuant to N.Y. Public Officers Law, Art.6

Type of Business:		
Street Address:		
City:	State:	Zip Code:
Starting Date of Employment:	Ending Date of Employment:	
Name of Supervisor for Reference:	Supervisor Phone Number:	
Position/Responsibilities:		
Reason For Departure:		
Name of Employer:		
Type of Business.		
Street Address.		
City:	State:	Zip Code:
Starting Date of Employment:	Ending Date of Employment:	
Name of Supervisor for Reference:	Supervisor Phone Number:	
Position/Responsibilities:		
Reason For Departure.		
Name of Employer.		

Appendix A:
Affidavit for Board Members, Officers, Managers, Owners, Partners, Principal Stakeholders, Directors, and Members

Type of Business:		
Street Address:		
City:	State:	Zip Code:
Starting Date of Employment:	Ending Date of Employment:	
Name of Supervisor for Reference:	Supervisor Phone Number:	
Position/Responsibilities:		
Reason For Departure:		
Name of Employer:	Type of Business:	
Street Address:		
City:	State:	Zip Code:
Starting Date of Employment:	Ending Date of Employment:	
Name of Supervisor for Reference:	Supervisor Phone Number:	
Position/Responsibilities:		
Reason For Departure:		

18. Offices Held or Ownership Interest in Other Businesses

List any affiliations you have been associated with in the past 10 years. Affiliation, for the purpose of this section, includes serving as either a board member, officer, manager, owner, partner, principal stakeholder, director or member of the organization. Organizations outside of New York State must also be disclosed.

Have you owned or operated a business or had any affiliations with the operations of a business in New York, in the USA, or in other countries? ☐ Yes ☐ No

From:	Name and Address of Business:	
To:		
Business Type:	Office Held/Nature of Interest:	☐ open ☐ closed ☐ proposed
Name, Address and Phone Number of Licensing/Regulatory Agency, if applicable:		

Appendix A:
Affidavit for Board Members, Officers, Managers, Owners, Partners, Principal Stakeholders, Directors, and Members
Redacted pursuant to N.Y. Public Officers Law, Art.6

Name, Address and Phone Number of Licensing/Regulatory Agency, if applicable:		
From:	Name and Address of Business:	
To:		
Business Type:	Office Held/Nature of Interest:	☐open ☐closed ☐proposed
Name, Address and Phone Number of Licensing/Regulatory Agency, if applicable:		

Appendix A:
Affidavit for Board Members, Officers, Managers, Owners, Partners, Principal Stakeholders, Directors, and Members

19. Affirmative Statement of Qualifications

For individuals who have not previously served as a director/officer nor have had managerial experience, please include a statement below explaining how you are qualified to operate the proposed facility. This statement should include, but not be limited to, any relevant community/volunteer background and experience.

Please refer to my attached biography, which details my experience and capability to play an important role in the operation of the Registered Organization.

20. The undersigned certifies, under penalty of perjury, that the information contained herein or attached hereto is accurate, true, and complete in all material respects.

Signature: [signature]	Date: 6-1-15
Notary Name: Sheryl Ann Barrett	Notary Registration Number: 01BA6201803
Notary (Notary Must Affix Stamp or Seal)	Date: June 1, 2015

SHERYL ANN BARRETT
Notary Public, State of New York
No. 01BA6201803
Qualified In Richmond County
Commission Expires March 2, 2017

Christopher Perez, MD – Medical Advisor

[redacted] He received his undergraduate degree in biology at Brooklyn College. Dr. Perez completed an Internal Medicine internship at Staten Island University Hospital and a residency in Physical Medicine and Rehabilitation at UMDNJ-New Jersey Medical School and the Kessler Institute of Rehabilitation in West Orange New Jersey.

Dr. Perez is board certified and a Diplomat of the American Board of Physical Medicine and Rehabilitation. He joined our practice in 2002 and has served a vital role in our participation at Victory Memorial Hospital, Silver Lake Specialized Care Center, and Richmond University Medical Center. He has been an active participant in the lecture circuit and is a speaker for Forest Laboratories. He specializes in neuropathic pain and offering patients non-invasive, non-narcotic treatment options for chronic pain patients.

Since 2012, he has also been the Medical Director of Forest Rehabilitation Medicine, New York State's first certified Calmare Treatment center for the non-narcotic, non-invasive medical treatment for chronic pain and associated neuropathies.

Appendix A:
Affidavit for Board Members, Officers, Managers, Owners, Partners, Principal Stakeholders, Directors, and Members

Appendix A **must** be completed for all board members, officers, managers, owners, partners, principal stakeholders, directors, and members. For board members, officers, managers, owners, partners, directors, and members of the applicant that are not natural persons, Appendix A must be completed by each board member, officer, manager, owner, partner, director and member of that entity, going back to the level of ownership by a natural person. **An Organizational Chart documenting your organizational structure must be included with this application.**

1. Business Name: Citiva Medical LLC

This is the name that was entered in Section A of the Application for Registration as a Registered Organization.

2. Name: JOHN A. PIERCE | 3. Title: Member

4. Briefly describe the role of this person or entity in the proposed registered organization:

Director of Research and Development

5. Will this person or entity come into contact with medical marijuana or medical marijuana products?
☑ **Yes** ☐ **No**

Please refer to proof of fingerprinting immediately following this page.

Any managers who may come in contact with or handle medical marijuana, including medical marijuana products, shall be subject to a fingerprinting process as part of a criminal history background check in compliance with the procedures established by Division of Criminal Justice Services and submission of the applicable fee. Criminal history background checks must be done through Identogo at http://www.identogo.com/FP/NewYork.aspx using the ORI number NY0412500 and the Fingerprint Reason "Control Substance License."

6. Has this person or entity held any position of management or ownership during the preceding ten years of a 10% or greater interest in any other business which manufactured or distributed drugs? ☐ **Yes** ☑ **No**

If the answer to this question is yes, provide the name of the business, a statement defining the position of management or ownership held in such business, and any finding of violations of law or regulation by a governmental agency against the business or person or entity.

L-1 Enrollment Services

New York State
EasyPath Network

Applicant: PIERCE, JOHN, A
Address: [redacted]

OCA:
Date Fingerprinted: 20150604

Fingerprint Center: L087
Agency: NYS Dept of Health Bur Narcotic Enforcement
Reason Fingerprinted:
CONTROLLED SUBSTANCE
Amount Paid: 84.95
Fee Paid By: US BANK EPAY

Operator ID: 004

(Agency Copy)

L-1 Enrollment Services

New York State
EasyPath Network

Applicant: PIERCE, JOHN, A
Address: [redacted]

OCA:
Date Fingerprinted: 20150604

Fingerprint Center: L087
Agency: NYS Dept of Health Bur Narcotic Enforcement
Reason Fingerprinted:
CONTROLLED SUBSTANCE
Amount Paid: 84.95
Fee Paid By: US BANK EPAY

Operator ID: 004

(Agency Copy)

Appendix A:
Affidavit for Board Members, Officers, Managers, Owners, Partners, Principal Stakeholders, Directors, and Members

7. Has this person or entity been convicted of a felony or had any type of registration or license suspended or revoked in any administrative or judicial proceeding?
☐ Yes ☑ No

If the answer to either of these questions is "Yes," a statement explaining the circumstances of the felony, suspension or revocation must be provided below.

8. Phone: [redacted]	9. Fax
10. Email: [redacted]	
11. Residence Address: [redacted]	
12. City: [redacted]	13. State: [redacted] / 14. ZIP Code: [redacted]

15. Formal Education		Dates Attended		Degree	
Institution	Address	From	To	Degree Received	Date Received
UC RIVERSIDE	UC RIVERSIDE RIVERSIDE, CA 92501	9/1975	6/1980	BS double major in Chemistry & Biochemistry	JUNE 1980
UC RIVERSIDE	UC RIVERSIDE RIVERSIDE, CA 92501	9/1980	6/1986	PhD in Analytical Chemistry	JUNE 1986

Appendix A:
Affidavit for Board Members, Officers, Managers, Owners, Partners, Principal Stakeholders, Directors, and Members

16. Licenses Held: List any and all licenses issued by a governmental or other regulatory entity.

Type of Professional License	License Number	Institution Granting License (Mailing Address, Phone, Email)	Effective Date	Expiration Date

17. Employment History for the Past 10 Years: Start with MOST RECENT employment and include employment during the last 10 years. Attach additional copies of page 3, if necessary.

Redacted pursuant to N.Y. Public Officers Law, Art.6

Appendix A:
Affidavit for Board Members, Officers, Managers, Owners, Partners, Principal Stakeholders, Directors, and Members

Street Address:		
City:	State:	Zip Code:
Starting Date of Employment:	Ending Date of Employment:	
Name of Supervisor for Reference:	Supervisor Phone Number:	
Position/Responsibilities:		
Reason For Departure:		
Name of Employer:		
Type of Business:		
Street Address:		
City:	State:	Zip Code:
Starting Date of Employment:	Ending Date of Employment:	
Name of Supervisor for Reference:	Supervisor Phone Number:	
Position/Responsibilities:		
Reason For Departure:		
Name of Employer:		
Type of Business:		
Street Address:		
City:	State:	Zip Code:
Starting Date of Employment:	Ending Date of Employment:	
Name of Supervisor for Reference:	Supervisor Phone Number:	
Position/Responsibilities:		
Reason For Departure:		
Name of Employer:		

Appendix A:
Affidavit for Board Members, Officers, Managers, Owners, Partners, Principal Stakeholders, Directors, and Members

Type of Business:		
Street Address:		
City:	State:	Zip Code:
Starting Date of Employment:	Ending Date of Employment:	
Name of Supervisor for Reference:	Supervisor Phone Number:	
Position/Responsibilities:		
Reason For Departure:		
Name of Employer:	Type of Business:	
Street Address:		
City:	State:	Zip Code:
Starting Date of Employment:	Ending Date of Employment:	
Name of Supervisor for Reference:	Supervisor Phone Number:	
Position/Responsibilities:		
Reason For Departure:		

18. Offices Held or Ownership Interest in Other Businesses

List any affiliations you have been associated with in the past 10 years. Affiliation, for the purpose of this section, includes serving as either a board member, officer, manager, owner, partner, principal stakeholder, director or member of the organization. Organizations outside of New York State must also be disclosed.

Have you owned or operated a business or had any affiliations with the operations of a business in New York, in the USA, or in other countries? ☑ Yes ☐ No

From: JULY 2007	Name and Address of Business: LEMUR INTERNATIONAL, 5212 WALL AVE., RICHMOND, CA 94804	
To: PRESENT		
Business Type: VANILLA PRODUCTS	Office Held/Nature of Interest: PARTNER	☑ open ☐ closed ☐ proposed
Name, Address and Phone Number of Licensing/Regulatory Agency, if applicable:		

Appendix A:
Affidavit for Board Members, Officers, Managers, Owners, Partners, Principal Stakeholders, Directors, and Members

From: To:	Name and Address of Business:	
Business Type:	Office Held/Nature of Interest:	☐ open ☐ closed ☐ proposed
Name, Address and Phone Number of Licensing/Regulatory Agency, if applicable:		
From: To:	Name and Address of Business:	
Business Type:	Office Held/Nature of Interest:	☐ open ☐ closed ☐ proposed
Name, Address and Phone Number of Licensing/Regulatory Agency, if applicable:		
From: To:	Name and Address of Business:	
Business Type:	Office Held/Nature of Interest:	☐ open ☐ closed ☐ proposed
Name, Address and Phone Number of Licensing/Regulatory Agency, if applicable:		

Appendix A:
Affidavit for Board Members, Officers, Managers, Owners, Partners, Principal Stakeholders, Directors, and Members

19. Affirmative Statement of Qualifications

For individuals who have not previously served as a director/officer nor have had managerial experience, please include a statement below explaining how you are qualified to operate the proposed facility. This statement should include, but not be limited to, any relevant community/volunteer background and experience.

Dr. Pierce received his PhD in Analytical Chemistry in 1986 and has worked developing unique botanical products for 20 years.
He also:
Directs the development of products derived from botanical sources. The extraction methodologies include Supercritical CO2 processing coupled with conventional extraction techniques that afford materials of unique Intellecutal Property (IP) for purposes of proprietary patentable products.

President of an herbal products company specializing in vanilla, sandalwood, kava and other Pacific Island botanicals, as well as in providing training services in quality assurance and quality control in the pharmaceutical laboratory. These training services build on eighteen years experience in the research and development of analytical chemical techniques (e.g., FT-IR and FT-NMR, as well as other methods such as M S, AA, UV/VIS, GC, HPLC, column chromatography, and protein isolation/characterization), and their application to the identification/isolation of biomolecules for medicinal purposes and environmental monitoring.

Advise, coordinate, and supervise the implementation of laboratory instrumentation and procedures for the analysis of medicinal plants and herbs.

20. The undersigned certifies, under penalty of perjury, that the information contained herein or attached hereto is accurate, true, and complete in all material respects.

Signature: John De Pierce	Date: 4 June 2015
Notary Name: Susan Cuvilly	Notary Registration Number: 01CU6295195
Notary (Notary Must Affix Stamp or Seal)	Date: 6/4/15

SUSAN ANN CUVILLY
Notary Public - State of New York
NO. 01CU6295195
Qualified in Queens County
My Commission Expires Dec 30, 2017

Dr. John Pierce

Complementing the skills, talents and experiences of Company's other principals are those of another skilled and experienced professional – Dr. John Pierce ("Dr. Pierce"). Dr. Pierce will serve Company on an exclusive basis in the Northeast as its Alternative Dosage Forms and Quality Control Advisor (Director), and will establish protocols and training with respect to extraction systems and techniques, production of alternative dosage forms and establishment of quality controls. Company's production and testing of pharmaceutical grade medical marijuana and medical marijuana products will also be guided and overseen by Dr. Pierce.

Dr. Pierce received his Ph.D. in Analytical Chemistry in 1986, and has [redacted] In his current capacity as a consultant and scientist, he currently develops innovative strategies including supercritical CO2 processing coupled with other conventional extraction techniques, in a more sophisticated fashion, that affords materials of pharmaceutical grade quality suitable for specific dosage forms in a variety of presentations ranging from topical applications to tinctures and baked goods, to name a few.

Dr. Pierce is the inventor of the following seven issued patents in the United States where the strategies aforementioned have been reduced to practice: US Patent 7,279,184 (Methods and compositions comprising Ilex); US Patent 7,105,185 (Kavalactone profile); US Patent 7,037,524 (Oral delivery of a botanical); US Patent 7,001,620 (Kavalactone product); US Patent 6,601,527 (Method of cultivating piper methysticum plants); US Patent 7,291,352 (Methods and compositions for oral delivery of Areca and mate' or theobromine); US Patent 7,029,707 (Method of producing a processed kava product having an altered kavalactone distribution and processed kava products produced using the same)

EDUCATION

University of California at Riverside
Degree: Ph.D., December 1986
Major: Chemistry
Specialization: Analytical Chemistry

University of California at Riverside
Degree: B.S. *cum laude*, June 1980
Major: Biochemistry and Chemistry
Minor: Biology

PROFESSIONAL EXPERIENCE

Consultant
February 2001 to present
Directing development of products derived from botanical sources. The extraction methodologies include Supercritical CO_2 processing coupled with conventional extraction techniques that afford materials of unique Intellecutal Property (IP) for purposes of proprietary patentable products.

Redacted pursuant to N.Y. Public Officers Law, Art.6

PUBLICATIONS AND PRESENTATIONS

Author or co-author of 11 papers and reports on subjects including Fourier-Transform Infrared Spectroscopy (FT-IR) and Fourier-Transform Nuclear Magnetic Spectroscopy (FT-NMR), and their application (along with other analytical and chemical methods such as MS, AA, UV/VIS, GC, HPLC, column chromatography, and protein isolation/characterization) to the identification/isolation of biomolecules. Presenter of 7 talks (invited speaker at 4th International Mycological Conference in Regensburg, Germany) on these subjects at international technical conferences.

INVENTOR ON ISSUED US PATENTS

Inventor of 7 issued US Patents:

US Patent 7,279,184 Methods and compositions comprising Ilex
US Patent 7,105,185 Kavalactone profile
US Patent 7,037,524 Oral delivery of a botanical
US Patent 7,001,620 Kavalactone product
US Patent 6,601,527 Method of cultivating piper methysticum plants
US Patent 7,291,352 Methods and compositions for oral delivery of Areca and mate' or theobromine
US Patent 7,029,707 Method of producing a processed kava product having an altered kavalactone distribution and processed kava products produced using the same

PROFESSIONAL ORGANIZATIONS

American Chemical Society

LEGAL CASES

1998 Product Non-Compliance --Kava Extract
2004 Patent Infringement --Magnolia Bark Extract
2006 Product Adulteration --- Botanical Extracts

LANGUAGES SPOKEN

German, French, Italian, Spanish

GENERAL

Dr. Pierce received his Ph.D. in Analytical Chemistry in 1986, [redacted] In his current capacity as a consultant and scientist, he currently develops innovative strategies including supercritical CO2 processing coupled with other conventional extraction techniques, in a more sophisticated fashion, that affords materials of pharmaceutical grade quality suitable for specific dosage forms in a variety of presentations ranging from topical applications to tinctures and baked goods, to name a few. Dr. Pierce is the inventor of seven issued patents in the United States where the strategies aforementioned have been reduced to practice. He also has formerly owned a laboratory analysis business specializing in the analysis of herbal and botanical preparations and products.

Appendix A:
Affidavit for Board Members, Officers, Managers, Owners, Partners, Principal Stakeholders, Directors, and Members

Appendix A **must** be completed for all board members, officers, managers, owners, partners, principal stakeholders, directors, and members. For board members, officers, managers, owners, partners, directors, and members of the applicant that are not natural persons, Appendix A must be completed by each board member, officer, manager, owner, partner, director and member of that entity, going back to the level of ownership by a natural person. **An Organizational Chart documenting your organizational structure must be included with this application.**

1. Business Name: Citiva Medical LLC

This is the name that was entered in Section A of the Application for Registration as a Registered Organization.

2. Name: Daniel Joseph Rogers | 3. Title: Member

4. Briefly describe the role of this person or entity in the proposed registered organization:

Direct involvement in, and oversight of, operational and financial matters.

5. Will this person or entity come into contact with medical marijuana or medical marijuana products?

☑ Yes ☐ No Please refer to the proof of fingerprinting immediately following this page.

Any managers who may come in contact with or handle medical marijuana, including medical marijuana products, shall be subject to a fingerprinting process as part of a criminal history background check in compliance with the procedures established by Division of Criminal Justice Services and submission of the applicable fee. Criminal history background checks must be done through Identogo at http://www.identogo.com/FP/NewYork.aspx using the ORI number NY0412500 and the Fingerprint Reason "Control Substance License."

6. Has this person or entity held any position of management or ownership during the preceding ten years of a 10% or greater interest in any other business which manufactured or distributed drugs? ☑ Yes ☐ No

If the answer to this question is yes, provide the name of the business, a statement defining the position of management or ownership held in such business, and any finding of violations of law or regulation by a governmental agency against the business or person or entity.

Managing partner and CFO of Greenwerkz from June 2010 through February 2014. I took over operational control of this company in June 2010 to stabilize operations and to bring the company to profitability. I sold the company in February 2014 to pursue other opportunities.

L-1 Enrollment Services

New York State
EasyPath Network

Applicant: ROGERS DANIEL JOSEPH
Address: [redacted]

OCA:
Date Fingerprinted: 20150604

Fingerprint Center: L061
Agency: NYS Dept of Health Bur Narcotic Enforcement
Reason Fingerprinted:
CONTROLLED SUBSTANCE

Amount Paid: 84.95
Fee Paid By: US BANK EPAY

Operator ID: 061002

(Agency Copy)

L-1 Enrollment Services

Appendix A:
Affidavit for Board Members, Officers, Managers, Owners, Partners, Principal Stakeholders, Directors, and Members

7. Has this person or entity been convicted of a felony or had any type of registration or license suspended or revoked in any administrative or judicial proceeding?
☐ Yes ☑ No

If the answer to either of these questions is "Yes," a statement explaining the circumstances of the felony, suspension or revocation must be provided below.

8. Phone: [redacted]			9. Fax: N/A		
10. Email: [redacted]					
11. Residence Address: [redacted]					
12. City: [redacted]		13. State [redacted]		14. ZIP Code [redacted]	
15. Formal Education		Dates Attended		Degree	
Institution	Address	From	To	Degree Received	Date Received
Fort Lewis College	Durango, Colorado	1993	1997	Bachelor's Degree in Finance	12/97

Appendix A:
Affidavit for Board Members, Officers, Managers, Owners, Partners, Principal Stakeholders, Directors, and Members

16. Licenses Held: List any and all licenses issued by a governmental or other regulatory entity.

Type of Professional License	License Number	Institution Granting License (Mailing Address, Phone, Email)	Effective Date	Expiration Date
Key Employee	M19484	Marijuana Enforcement Div. 455 Sherman St., Suite 390 Denver, CO 80203	9/2014	current
Key Employee	00317	Marijuana Enforcement Div. 455 Sherman St., Suite 390 Denver, CO 80203	7/2010	3/2014

17. Employment History for the Past 10 Years: Start with MOST RECENT employment and include employment during the last 10 years. Attach additional copies of page 3, if necessary.

Redacted pursuant to N.Y. Public Officers Law, Art.6

Appendix A:
Affidavit for Board Members, Officers, Managers, Owners, Partners, Principal Stakeholders, Directors, and Members

Redacted pursuant to N.Y. Public Officers Law, Art.6

Name of Employer: Federal Deposit Insurance Corporation		
Type of Business: Federal Agency		
Street Address:		
City:	State:	Zip Code:
Starting Date of Employment: March 2009	Ending Date of Employment: May 2010	
Name of Supervisor for Reference:	Supervisor Phone Number:	
Position/Responsibilities: Special Project Underwriter (contract), located in Puerto Rico. Performed loan auditing for commercial		

Redacted pursuant to N.Y. Public Officers Law, Art.6

Appendix A:

Affidavit for Board Members, Officers, Managers, Owners, Partners, Principal Stakeholders, Directors, and Members

Redacted pursuant to N.Y. Public Officers Law, Art.6

Appendix A:

Affidavit for Board Members, Officers, Managers, Owners, Partners, Principal Stakeholders, Directors, and Members

Redacted pursuant to N.Y. Public Officers Law, Art.6

From: October 2014 To: Current	Name and Address of Business: Grow Condos, Inc, 722 W. Dutton Road, Eagle Point, Oregon 97524	
Business Type: Real Estate Developer	Office Held/Nature of Interest: Board Director	☑ open ☐ closed ☐ proposed
Name, Address and Phone Number of Licensing/Regulatory Agency, if applicable: N/A		
From: To:	Name and Address of Business:	
Business Type:	Office Held/Nature of Interest:	☐ open ☐ closed ☐ proposed
Name, Address and Phone Number of Licensing/Regulatory Agency, if applicable:		

Appendix A:

Affidavit for Board Members, Officers, Managers, Owners, Partners, Principal Stakeholders, Directors, and Members

19. Affirmative Statement of Qualifications

For individuals who have not previously served as a director/officer nor have had managerial experience, please include a statement below explaining how you are qualified to operate the proposed facility. This statement should include, but not be limited to, any relevant community/volunteer background and experience.

Please refer to attached CV and bio.

20. The undersigned certifies, under penalty of perjury, that the information contained herein or attached hereto is accurate, true, and complete in all material respects.

Signature: Paul J. Rog	Date: June 3, 2015
Notary Name: Lachelle M Mathes	Notary Registration Number: 20144023468
Notary (Notary Must Affix Stamp or Seal)	Date: June 3, 2015

LACHELLE MATHES
NOTARY PUBLIC
STATE OF COLORADO
NOTARY ID 20144023468
MY COMMISSION EXPIRES JUNE 11, 2018

LACHELLE M MATHES, Notary Public

CFO

Daniel J. Rogers has 12 years institutional banking experience with a specialization in business velopment risk management. [redacted] Mr. Rogers obtained his bachelor's degree in finance in 1997 from Fort Lewis College, Durango, CO, and [redacted]

(303) 877-7452
djr5280@gmail.com

Resume for **Daniel Joseph Rogers**

Qualifications & Skills Summary:

- 4.5 years' experience as managing member of a vertically integrated production - retail Cannabis company.
- 15-years' experience: commercial lending, financial planning, accounting, budget preparation, senior management reporting and financial operations.
- In general, 15-years finance and accounting experience. Finance degree, Bachelors, cum laude graduate.
- FDIC licensed examiner. Completed on-site audits for 3 banks' commercial real estate portfolios. Total loans reviewed = $3BB.
- Excellent and extensive communication for due diligence and financial planning.
- Excellent risk management reporting and credit underwriting experience.

Professional Experience:

Redacted pursuant to N.Y. Public Officers Law, Art.6

FDIC Auditor (Contract) – Puerto Rico
March 2009 – May 2010
Position: Special Project Underwriter

- Loan auditing for commercial real estate portfolio to assess credit risk and recommend course of action.
- Advised client regarding funding risk, current market conditions, and valuation of collateralized real estate.
- Assess lender's compliance with in-house credit risk procedures and determine if appropriate with industry accepted standards.
- Team leader managing 8-person team to complete portfolio review.
- Data reconciliation and report preparation summarizing findings and reporting to client.
- Obtained FDIC security background clearance.

Redacted pursuant to N.Y. Public Officers Law, Art.6

Redacted pursuant to N.Y. Public Officers Law, Art.6

Education:

- **Finance – Bachelor's**. Fort Lewis College. Graduated December 1997. Durango, Colorado. Cum Laude.
- **Bank of America / Management Associate Program.** Selected to a 6-month training program within Bank of America's Corporate & Investment Bank. The program included exposure to a variety of finance / banking related concepts such as; cash-flow and balance sheet analysis, credit underwriting and risk assessment and applicable federal regulatory issues.
- **U.S. Army Basic Training & Advanced Individual Training.** U.S. Army Reserve from November 1991 – November 1997. Completed Basic Training in Ft. Knox, Kentucky. Advanced Individual Training in Ft. Ben. Harrison, Indiana for the US Army's Finance School. Received the General Abrams Award for Leadership, the highest honor awarded to a Basic Training graduate. Military obligation completed / ended Nov. 1997. (Grade: E-4, Rank: Specialist).

News articles:

- Sacramento Bee by Peter Hecht, published August 14, 2011: "Colorado's Medical Pot Business is For-Profit, Regulated – and Thriving".

  http://www.sacbee.com/2011/08/14/3836755/colorados-medical-pot-business.html

- Huffington Post by Ryan Glasspiegel, published June 16, 2012: "Medical Marijuana: Colorado Law Continues Implementation".

  http://www.huffingtonpost.com/ryan-glasspiegel/medical-marijuana-colorado-denver_b_1602632.html

- Book: "Weed Land – Inside Marijuana's Epicenter and How Pot Went Legit" by Peter Hecht. Published April 7, 2014

  http://www.weedlandbook.com/

- Book: "How to Succeed in Medical Marijuana: Business Secrets of Successful Medical Marijuana Entrepreneurs". Published by Medical Marijuana Business Daily (Google eBook). Published January 1, 2012.

  http://books.google.com/books?id=J1KP_hX_i-4C&printsec=frontcover#v=onepage&q&f=false

Salary history and personal references available upon request.

Appendix A:
Affidavit for Board Members, Officers, Managers, Owners, Partners, Principal Stakeholders, Directors, and Members

Appendix A **must** be completed for all board members, officers, managers, owners, partners, principal stakeholders, directors, and members. For board members, officers, managers, owners, partners, directors, and members of the applicant that are not natural persons, Appendix A must be completed by each board member, officer, manager, owner, partner, director and member of that entity, going back to the level of ownership by a natural person. **An Organizational Chart documenting your organizational structure must be included with this application.**

1. Business Name: Citiva Medical LLC

This is the name that was entered in Section A of the Application for Registration as a Registered Organization.

2. Name: Paul Russo | 3. Title: Member

4. Briefly describe the role of this person or entity in the proposed registered organization:
Although I will not have an active role in the day-to-day operations, I will provide support and advice to the management team, based on my business experience.

5. Will this person or entity come into contact with medical marijuana or medical marijuana products?
☐ Yes ☑ No

Any managers who may come in contact with or handle medical marijuana, including medical marijuana products, shall be subject to a fingerprinting process as part of a criminal history background check in compliance with the procedures established by Division of Criminal Justice Services and submission of the applicable fee. Criminal history background checks must be done through Identogo at http://www.identogo.com/FP/NewYork.aspx using the ORI number NY0412500 and the Fingerprint Reason "Control Substance License."

6. Has this person or entity held any position of management or ownership during the preceding ten years of a 10% or greater interest in any other business which manufactured or distributed drugs? ☐ Yes ☑ No

If the answer to this question is yes, provide the name of the business, a statement defining the position of management or ownership held in such business, and any finding of violations of law or regulation by a governmental agency against the business or person or entity.

Appendix A:
Affidavit for Board Members, Officers, Managers, Owners, Partners, Principal Stakeholders, Directors, and Members

7. Has this person or entity been convicted of a felony or had any type of registration or license suspended or revoked in any administrative or judicial proceeding?
☐ Yes ☑ No

If the answer to either of these questions is "Yes," a statement explaining the circumstances of the felony, suspension or revocation must be provided below.

8. Phone: [redacted]			9. Fax:		
10. Email: [redacted]					
11. Residence Address: [redacted]					
12. City [redacted]		13. State: [redacted]		14. ZIP Code: [redacted]	
15. Formal Education		Dates Attended		Degree	
Institution	Address	From	To	Degree Received	Date Received
SUNY Binghamton	Binghamton, NY	1989	1993	BS, Chemisty	1993
University of Virginia	Charlottesville, VA	1993	1998	PhD, Chemistry	1998

Appendix A:
Affidavit for Board Members, Officers, Managers, Owners, Partners, Principal Stakeholders, Directors, and Members

16. Licenses Held: List any and all licenses issued by a governmental or other regulatory entity.

Type of Professional License	License Number	Institution Granting License (Mailing Address, Phone, Email)	Effective Date	Expiration Date
		N/A		

17. Employment History for the Past 10 Years: Start with MOST RECENT employment and include employment during the last 10 years. Attach additional copies of page 3, if necessary.

Redacted pursuant to N.Y. Public Officers Law, Art.6

Appendix A:
Affidavit for Board Members, Officers, Managers, Owners, Partners, Principal Stakeholders, Directors, and Members
Redacted pursuant to N.Y. Public Officers Law, Art.6

Name of Employer:		
Type of Business:		
Street Address:		
City:	State:	Zip Code:
Starting Date of Employment:	Ending Date of Employment:	
Name of Supervisor for Reference:	Supervisor Phone Number:	
Position/Responsibilities:		
Reason For Departure:		
Name of Employer:		
Type of Business:		
Street Address:		
City:	State:	Zip Code:
Starting Date of Employment:	Ending Date of Employment:	
Name of Supervisor for Reference:	Supervisor Phone Number:	
Position/Responsibilities:		
Reason For Departure:		
Name of Employer:		

Appendix A:
Affidavit for Board Members, Officers, Managers, Owners, Partners, Principal Stakeholders, Directors, and Members

Type of Business:		
Street Address:		
City:	State:	Zip Code:
Starting Date of Employment:	Ending Date of Employment:	
Name of Supervisor for Reference:	Supervisor Phone Number:	
Position/Responsibilities:		
Reason For Departure:		
Name of Employer:	Type of Business:	
Street Address:		
City:	State:	Zip Code:
Starting Date of Employment:	Ending Date of Employment:	
Name of Supervisor for Reference:	Supervisor Phone Number:	
Position/Responsibilities:		
Reason For Departure:		

18. Offices Held or Ownership Interest in Other Businesses

List any affiliations you have been associated with in the past 10 years. Affiliation, for the purpose of this section, includes serving as either a board member, officer, manager, owner, partner, principal stakeholder, director or member of the organization. Organizations outside of New York State must also be disclosed.

Have you owned or operated a business or had any affiliations with the operations of a business in New York, in the USA, or in other countries? ☐ **Yes** ☑ **No**

From:	Name and Address of Business:	
To:		
Business Type:	Office Held/Nature of Interest:	☐ **open** ☐ **closed** ☐ **proposed**
Name, Address and Phone Number of Licensing/Regulatory Agency, if applicable:		

Appendix A:
Affidavit for Board Members, Officers, Managers, Owners, Partners, Principal Stakeholders, Directors, and Members

From:	Name and Address of Business:	
To:		
Business Type:	Office Held/Nature of Interest:	☐open ☐closed ☐proposed
Name, Address and Phone Number of Licensing/Regulatory Agency, if applicable:		
From:	Name and Address of Business:	
To:		
Business Type:	Office Held/Nature of Interest:	☐open ☐closed ☐proposed
Name, Address and Phone Number of Licensing/Regulatory Agency, if applicable:		
From:	Name and Address of Business:	
To:		
Business Type:	Office Held/Nature of Interest:	☐open ☐closed ☐proposed
Name, Address and Phone Number of Licensing/Regulatory Agency, if applicable:		

Appendix A:
Affidavit for Board Members, Officers, Managers, Owners, Partners, Principal Stakeholders, Directors, and Members

19. Affirmative Statement of Qualifications

For individuals who have not previously served as a director/officer nor have had managerial experience, please include a statement below explaining how you are qualified to operate the proposed facility. This statement should include, but not be limited to, any relevant community/volunteer background and experience.

As indicated above, I have professional business experience that will allow me to support the successful development and operation of Citiva Medical LLC. I will bring a perspective of general business operation that I believe will complement the experience of the management team, which has the expertise in the medical marihuana industry and ancillary program elements. Although I will not be involved in day-to-day operations, I will be available as a resource to the management team, and believe that my specific capabilities will make the Citiva team a well-balanced organization.

20. The undersigned certifies, under penalty of perjury, that the information contained herein or attached hereto is accurate, true, and complete in all material respects.

Signature: Paul Rizzo	Date: 6/2/15
Notary Name: Chantee Thimes	Notary Registration Number: 13500791
Notary (Notary Must Affix Stamp or Seal)	Date: 6/2/15

NOTARY PUBLIC NOTARY SEAL STATE OF MISSOURI

CHANTEE THIMES
My Commission Expires
July 8, 2017
St. Louis County
Commission #13500791

Appendix A:
Affidavit for Board Members, Officers, Managers, Owners, Partners, Principal Stakeholders, Directors, and Members

Appendix A **must** be completed for all board members, officers, managers, owners, partners, principal stakeholders, directors, and members. For board members, officers, managers, owners, partners, directors, and members of the applicant that are not natural persons, Appendix A must be completed by each board member, officer, manager, owner, partner, director and member of that entity, going back to the level of ownership by a natural person. **An Organizational Chart documenting your organizational structure must be included with this application.**

1. Business Name: Citiva Medical LLC

This is the name that was entered in Section A of the Application for Registration as a Registered Organization.

2. Name: Jonathon Salvo 3. Title:

4. Briefly describe the role of this person or entity in the proposed registered organization:

My trust is a member of VG Capital that owns shares in VG Citiva Medical holding,LLC witch hold shares in Citiva medical LLC.

5. Will this person or entity come into contact with medical marijuana or medical marijuana products?
☐ **Yes** ☑ **No**

Any managers who may come in contact with or handle medical marijuana, including medical marijuana products, shall be subject to a fingerprinting process as part of a criminal history background check in compliance with the procedures established by Division of Criminal Justice Services and submission of the applicable fee. Criminal history background checks must be done through Identogo at http://www.identogo.com/FP/NewYork.aspx using the ORI number NY0412500 and the Fingerprint Reason "Control Substance License."

6. Has this person or entity held any position of management or ownership during the preceding ten years of a 10% or greater interest in any other business which manufactured or distributed drugs? ☐ **Yes** ☑ **No**

If the answer to this question is yes, provide the name of the business, a statement defining the position of management or ownership held in such business, and any finding of violations of law or regulation by a governmental agency against the business or person or entity.

Appendix A:
Affidavit for Board Members, Officers, Managers, Owners, Partners, Principal Stakeholders, Directors, and Members

7. Has this person or entity been convicted of a felony or had any type of registration or license suspended or revoked in any administrative or judicial proceeding?
☐ Yes ☑ No

If the answer to either of these questions is "Yes," a statement explaining the circumstances of the felony, suspension or revocation must be provided below.

8. Phone: [redacted]	9. Fax:
10. Email: [redacted]	
11. Residence Address: [redacted]	
12. City: Marlboro	13. State: [redacted] 14. ZIP Code: [redacted]

15. Formal Education		Dates Attended		Degree	
Institution	Address	From	To	Degree Received	Date Received

Appendix A:
Affidavit for Board Members, Officers, Managers, Owners, Partners, Principal Stakeholders, Directors, and Members

16. Licenses Held: List any and all licenses issued by a governmental or other regulatory entity.

Type of Professional License	License Number	Institution Granting License (Mailing Address, Phone, Email)	Effective Date	Expiration Date

17. Employment History for the Past 10 Years: Start with MOST RECENT employment and include employment during the last 10 years. Attach additional copies of page 3, if necessary.

Name of Employer:		
Type of Business:		
Street Address:		
City:	State:	Zip Code:
Starting Date of Employment:	Ending Date of Employment:	
Name of Supervisor for Reference:	Supervisor Phone Number:	
Position/Responsibilities:		
Reason For Departure:		
Name of Employer:		
Type of Business:		

Appendix A:
Affidavit for Board Members, Officers, Managers, Owners, Partners, Principal Stakeholders, Directors, and Members

Street Address:		
City:	State:	Zip Code:
Starting Date of Employment:	Ending Date of Employment:	
Name of Supervisor for Reference:	Supervisor Phone Number:	
Position/Responsibilities:		
Reason For Departure:		
Name of Employer:		
Type of Business:		
Street Address:		
City:	State:	Zip Code:
Starting Date of Employment:	Ending Date of Employment:	
Name of Supervisor for Reference:	Supervisor Phone Number:	
Position/Responsibilities:		
Reason For Departure:		
Name of Employer:		
Type of Business:		
Street Address:		
City:	State:	Zip Code:
Starting Date of Employment:	Ending Date of Employment:	
Name of Supervisor for Reference:	Supervisor Phone Number:	
Position/Responsibilities:		
Reason For Departure:		
Name of Employer:		

Appendix A:
Affidavit for Board Members, Officers, Managers, Owners, Partners, Principal Stakeholders, Directors, and Members

Type of Business:		
Street Address:		
City:	State:	Zip Code:
Starting Date of Employment:	Ending Date of Employment:	
Name of Supervisor for Reference:	Supervisor Phone Number:	
Position/Responsibilities:		
Reason For Departure:		
Name of Employer:	Type of Business:	
Street Address:		
City:	State:	Zip Code:
Starting Date of Employment:	Ending Date of Employment:	
Name of Supervisor for Reference:	Supervisor Phone Number:	
Position/Responsibilities:		
Reason For Departure:		

18. Offices Held or Ownership Interest in Other Businesses

List any affiliations you have been associated with in the past 10 years. Affiliation, for the purpose of this section, includes serving as either a board member, officer, manager, owner, partner, principal stakeholder, director or member of the organization. Organizations outside of New York State must also be disclosed.

Have you owned or operated a business or had any affiliations with the operations of a business in New York, in the USA, or in other countries? ☐ **Yes** ☑ **No**

From:	Name and Address of Business:	
To:		
Business Type:	Office Held/Nature of Interest:	☐ **open** ☐ **closed** ☐ **proposed**
Name, Address and Phone Number of Licensing/Regulatory Agency, if applicable:		

Appendix A:
Affidavit for Board Members, Officers, Managers, Owners, Partners, Principal Stakeholders, Directors, and Members

From: To:	Name and Address of Business:	
Business Type:	Office Held/Nature of Interest:	☐ open ☐ closed ☐ proposed
Name, Address and Phone Number of Licensing/Regulatory Agency, if applicable:		

From: To:	Name and Address of Business:	
Business Type:	Office Held/Nature of Interest:	☐ open ☐ closed ☐ proposed
Name, Address and Phone Number of Licensing/Regulatory Agency, if applicable:		

From: To:	Name and Address of Business:	
Business Type:	Office Held/Nature of Interest:	☐ open ☐ closed ☐ proposed
Name, Address and Phone Number of Licensing/Regulatory Agency, if applicable:		

Appendix A:
Affidavit for Board Members, Officers, Managers, Owners, Partners, Principal Stakeholders, Directors, and Members

19. Affirmative Statement of Qualifications

For individuals who have not previously served as a director/officer nor have had managerial experience, please include a statement below explaining how you are qualified to operate the proposed facility. This statement should include, but not be limited to, any relevant community/volunteer background and experience.

20. The undersigned certifies, under penalty of perjury, that the information contained herein or attached hereto is accurate, true, and complete in all material respects.

Signature: Joanne Cardi Trustee	Date: 6/2/15
Notary Name: Faith Philipson	Notary Registration Number: 01PH6289923
Notary (Notary Must Affix Stamp or Seal)	Date: 6/2/15

FAITH PHILIPSON
Notary Public, State of New York
No. 01PH6289923
Qualified in Richmond County
Commission Expires 09/30/17

Appendix A:
Affidavit for Board Members, Officers, Managers, Owners, Partners, Principal Stakeholders, Directors, and Members

Appendix A **must** be completed for all board members, officers, managers, owners, partners, principal stakeholders, directors, and members. For board members, officers, managers, owners, partners, directors, and members of the applicant that are not natural persons, Appendix A must be completed by each board member, officer, manager, owner, partner, director and member of that entity, going back to the level of ownership by a natural person. **An Organizational Chart documenting your organizational structure must be included with this application.**

1. Business Name: Citiva Medical LLC

This is the name that was entered in Section A of the Application for Registration as a Registered Organization.

2 Name: Lisa Salvo | 3. Title: Member

4. Briefly describe the role of this person or entity in the proposed registered organization:
Although I will not have an active role in the day-to-day operations, I will provide support and advice to the management team, based on my business experience

5. Will this person or entity come into contact with medical marijuana or medical marijuana products?
☐ Yes ☑ No

Any managers who may come in contact with or handle medical marijuana, including medical marijuana products, shall be subject to a fingerprinting process as part of a criminal history background check in compliance with the procedures established by Division of Criminal Justice Services and submission of the applicable fee. Criminal history background checks must be done through Identogo at http://www.identogo.com/FP/NewYork.aspx using the ORI number NY0412500 and the Fingerprint Reason "Control Substance License."

6. Has this person or entity held any position of management or ownership during the preceding ten years of a 10% or greater interest in any other business which manufactured or distributed drugs? ☐ Yes ☑ No

If the answer to this question is yes, provide the name of the business, a statement defining the position of management or ownership held in such business, and any finding of violations of law or regulation by a governmental agency against the business or person or entity.

Appendix A:
Affidavit for Board Members, Officers, Managers, Owners, Partners, Principal Stakeholders, Directors, and Members

7. Has this person or entity been convicted of a felony or had any type of registration or license suspended or revoked in any administrative or judicial proceeding?
☐ Yes ☑ No

If the answer to either of these questions is "Yes," a statement explaining the circumstances of the felony, suspension or revocation must be provided below.

8. Phone: [redacted]		9. Fax [redacted]	
10. Email: [redacted]			
11. Residence Address: [redacted]			
12. City [redacted]	13. State: [redacted]	14. ZIP Code: [redacted]	

15. Formal Education		Dates Attended		Degree	
Institution	Address	From	To	Degree Received	Date Received
St. Johns University	300 Howard Ave S.I. NY 10301	9/1985	5/1987	BA in Communication	6/1989
11	11	1/1996	6/1998	Master of Science Education	6/1998

Appendix A:
Affidavit for Board Members, Officers, Managers, Owners, Partners, Principal Stakeholders, Directors, and Members

16. Licenses Held: List any and all licenses issued by a governmental or other regulatory entity.

Type of Professional License	License Number	Institution Granting License (Mailing Address, Phone, Email)	Effective Date	Expiration Date

17. Employment History for the Past 10 Years: Start with MOST RECENT employment and include employment during the last 10 years. Attach additional copies of page 3, if necessary.

Redacted pursuant to N.Y. Public Officers Law, Art.6

Appendix A:
Affidavit for Board Members, Officers, Managers, Owners, Partners, Principal Stakeholders, Directors, and Members

Street Address		
City	State.	Zip Code
Starting Date of Employment:	Ending Date of Employment	
Name of Supervisor for Reference	Supervisor Phone Number	
Position/Responsibilities		
Reason For Departure		
Name of Employer:		
Type of Business:		
Street Address:		
City:	State:	Zip Code:
Starting Date of Employment:	Ending Date of Employment:	
Name of Supervisor for Reference:	Supervisor Phone Number:	
Position/Responsibilities:		
Reason For Departure:		
Name of Employer		
Type of Business		
Street Address		
City	State	Zip Code
Starting Date of Employment	Ending Date of Employment	
Name of Supervisor for Reference	Supervisor Phone Number	
Position/Responsibilities		
Reason For Departure		
Name of Employer:		

Appendix A:
Affidavit for Board Members, Officers, Managers, Owners, Partners, Principal Stakeholders, Directors, and Members

Type of Business:		
Street Address:		
City:	State:	Zip Code:
Starting Date of Employment:	Ending Date of Employment:	
Name of Supervisor for Reference:	Supervisor Phone Number:	
Position/Responsibilities:		
Reason For Departure:		
Name of Employer:	Type of Business	
Street Address.		
City.	State	Zip Code
Starting Date of Employment:	Ending Date of Employment	
Name of Supervisor for Reference	Supervisor Phone Number	
Position/Responsibilities		
Reason For Departure.		

18. Offices Held or Ownership Interest in Other Businesses

List any affiliations you have been associated with in the past 10 years. Affiliation, for the purpose of this section, includes serving as either a board member, officer, manager, owner, partner, principal stakeholder, director or member of the organization. Organizations outside of New York State must also be disclosed.

Have you owned or operated a business or had any affiliations with the operations of a business in New York, in the USA, or in other countries? ☑ Yes ☐ No

Redacted pursuant to N.Y. Public Officers Law, Art.6

Appendix A:
Affidavit for Board Members, Officers, Managers, Owners, Partners, Principal Stakeholders, Directors, and Members
Redacted pursuant to N.Y. Public Officers Law, Art.6

Name, Address and Phone Number of Licensing/Regulatory Agency, if applicable		
From:	Name and Address of Business:	
To:		
Business Type:	Office Held/Nature of Interest:	☐open ☐closed ☐proposed
Name, Address and Phone Number of Licensing/Regulatory Agency, if applicable:		
From	Name and Address of Business	
To		
Business Type	Office Held/Nature of Interest	☐open ☐closed ☐proposed
Name, Address and Phone Number of Licensing/Regulatory Agency, if applicable.		

Appendix A:
Affidavit for Board Members, Officers, Managers, Owners, Partners, Principal Stakeholders, Directors, and Members

19. Affirmative Statement of Qualifications

For individuals who have not previously served as a director/officer nor have had managerial experience, please include a statement below explaining how you are qualified to operate the proposed facility. This statement should include, but not be limited to, any relevant community/volunteer background and experience.

As indicated above, I have professional business experience that will allow me to support the successful development and operation of Citiva Medical LLC. I will bring a perspective of general business operation that I believe will complement the experience of the management team, which has the expertise in the medical marihuana industry and ancillary program elements. Although I will not be involved in day-to-day operations, I will be available as a resource to the management team, and believe that my specific capabilities will make the Citiva team a well-balanced organization.

20. The undersigned certifies, under penalty of perjury, that the information contained herein or attached hereto is accurate, true, and complete in all material respects.

Signature: Lisa M. Salvo	Date: 6/1/15
Notary Name: James N. Cappozzo Jr.	Notary Registration Number: 2220 9317
Notary (Notary Must Affix Stamp or Seal)	Date: 6-1-15

James N. Cappozzo Jr.
Notary Public, New Jersey
Commission Expires January 30, 2018

Appendix A:
Affidavit for Board Members, Officers, Managers, Owners, Partners, Principal Stakeholders, Directors, and Members

Appendix A **must** be completed for all board members, officers, managers, owners, partners, principal stakeholders, directors, and members. For board members, officers, managers, owners, partners, directors, and members of the applicant that are not natural persons, Appendix A must be completed by each board member, officer, manager, owner, partner, director and member of that entity, going back to the level of ownership by a natural person. **An Organizational Chart documenting your organizational structure must be included with this application.**

1. Business Name: Citiva Medical LLC

This is the name that was entered in Section A of the Application for Registration as a Registered Organization.

2. Name: Sabrina salvo 3. Title:

4. Briefly describe the role of this person or entity in the proposed registered organization:

My trust is a member of VG Capital that owns shares in VG Citiva Medical holding,LLC witch hold shares in Citiva medical LLC.

5. Will this person or entity come into contact with medical marijuana or medical marijuana products?
☐ **Yes** ☑ **No**

Any managers who may come in contact with or handle medical marijuana, including medical marijuana products, shall be subject to a fingerprinting process as part of a criminal history background check in compliance with the procedures established by Division of Criminal Justice Services and submission of the applicable fee. Criminal history background checks must be done through Identogo at http://www.identogo.com/FP/NewYork.aspx using the ORI number NY0412500 and the Fingerprint Reason "Control Substance License."

6. Has this person or entity held any position of management or ownership during the preceding ten years of a 10% or greater interest in any other business which manufactured or distributed drugs? ☐ **Yes** ☑ **No**

If **the answer to this question is yes, provide the name of the business, a statement defining the position of management or ownership held in such business, and any finding of violations of law or regulation by a governmental agency against the business or person or entity.**

Appendix A:
Affidavit for Board Members, Officers, Managers, Owners, Partners, Principal Stakeholders, Directors, and Members

7. Has this person or entity been convicted of a felony or had any type of registration or license suspended or revoked in any administrative or judicial proceeding?
☐ Yes ☑ No

If the answer to either of these questions is "Yes," a statement explaining the circumstances of the felony, suspension or revocation must be provided below.

8. Phone: [redacted]	9. Fax:
10. Email: [redacted]	
11. Residence Address: [redacted]	
12. City: [redacted]	13. State: [redacted] 14. ZIP Code: [redacted]

15. Formal Education		Dates Attended		Degree	
Institution	Address	From	To	Degree Received	Date Received

Appendix A:
Affidavit for Board Members, Officers, Managers, Owners, Partners, Principal Stakeholders, Directors, and Members

16. Licenses Held: List any and all licenses issued by a governmental or other regulatory entity.

Type of Professional License	License Number	Institution Granting License (Mailing Address, Phone, Email)	Effective Date	Expiration Date

17. Employment History for the Past 10 Years: Start with MOST RECENT employment and include employment during the last 10 years. Attach additional copies of page 3, if necessary.

Name of Employer:		
Type of Business:		
Street Address:		
City:	State:	Zip Code:
Starting Date of Employment:	Ending Date of Employment:	
Name of Supervisor for Reference:	Supervisor Phone Number:	
Position/Responsibilities:		
Reason For Departure:		
Name of Employer:		
Type of Business:		

Appendix A:
Affidavit for Board Members, Officers, Managers, Owners, Partners, Principal Stakeholders, Directors, and Members

Street Address:		
City:	State:	Zip Code:
Starting Date of Employment:	Ending Date of Employment:	
Name of Supervisor for Reference:	Supervisor Phone Number:	
Position/Responsibilities:		
Reason For Departure:		
Name of Employer:		
Type of Business:		
Street Address:		
City:	State:	Zip Code:
Starting Date of Employment:	Ending Date of Employment:	
Name of Supervisor for Reference:	Supervisor Phone Number:	
Position/Responsibilities:		
Reason For Departure:		
Name of Employer:		
Type of Business:		
Street Address:		
City:	State:	Zip Code:
Starting Date of Employment:	Ending Date of Employment:	
Name of Supervisor for Reference:	Supervisor Phone Number:	
Position/Responsibilities:		
Reason For Departure:		
Name of Employer:		

Appendix A:
Affidavit for Board Members, Officers, Managers, Owners, Partners, Principal Stakeholders, Directors, and Members

Type of Business:		
Street Address:		
City:	State:	Zip Code:
Starting Date of Employment:	Ending Date of Employment:	
Name of Supervisor for Reference:	Supervisor Phone Number:	
Position/Responsibilities:		
Reason For Departure:		
Name of Employer:	Type of Business:	
Street Address:		
City:	State:	Zip Code:
Starting Date of Employment:	Ending Date of Employment:	
Name of Supervisor for Reference:	Supervisor Phone Number:	
Position/Responsibilities:		
Reason For Departure:		

18. Offices Held or Ownership Interest in Other Businesses

List any affiliations you have been associated with in the past 10 years. Affiliation, for the purpose of this section, includes serving as either a board member, officer, manager, owner, partner, principal stakeholder, director or member of the organization. Organizations outside of New York State must also be disclosed.

Have you owned or operated a business or had any affiliations with the operations of a business in New York, in the USA, or in other countries? ☐ **Yes** ☑ **No**

From:	Name and Address of Business:	
To:		
Business Type:	Office Held/Nature of Interest:	☐ **open** ☐ **closed** ☐ **proposed**
Name, Address and Phone Number of Licensing/Regulatory Agency, if applicable:		

Appendix A:
Affidavit for Board Members, Officers, Managers, Owners, Partners, Principal Stakeholders, Directors, and Members

From: To:	Name and Address of Business:	
Business Type:	Office Held/Nature of Interest:	☐ open ☐ closed ☐ proposed
Name, Address and Phone Number of Licensing/Regulatory Agency, if applicable:		

From: To:	Name and Address of Business:	
Business Type:	Office Held/Nature of Interest:	☐ open ☐ closed ☐ proposed
Name, Address and Phone Number of Licensing/Regulatory Agency, if applicable:		

From: To:	Name and Address of Business:	
Business Type:	Office Held/Nature of Interest:	☐ open ☐ closed ☐ proposed
Name, Address and Phone Number of Licensing/Regulatory Agency, if applicable:		

Appendix A:
Affidavit for Board Members, Officers, Managers, Owners, Partners, Principal Stakeholders, Directors, and Members

19. Affirmative Statement of Qualifications

For individuals who have not previously served as a director/officer nor have had managerial experience, please include a statement below explaining how you are qualified to operate the proposed facility. This statement should include, but not be limited to, any relevant community/volunteer background and experience.

20. The undersigned certifies, under penalty of perjury, that the information contained herein or attached hereto is accurate, true, and complete in all material respects.

Signature: Joanne Cardi Trustee	Date: 6/2/15
Notary Name: Faith Philipson	Notary Registration Number: 01PH6289923
Notary (Notary Must Affix Stamp or Seal)	Date: 6/2/15

FAITH PHILIPSON
Notary Public, State of New York
No. 01PH6289923
Qualified in Richmond County
Commission Expires 09/30/17

NEW YORK STATE | Department of Health

Medical Marijuana Program
Application for Registration as a Registered Organization

Appendix A:
Affidavit for Board Members, Officers, Managers, Owners, Partners, Principal Stakeholders, Directors, and Members

Appendix A **must** be completed for all board members, officers, managers, owners, partners, principal stakeholders, directors, and members. For board members, officers, managers, owners, partners, directors, and members of the applicant that are not natural persons, Appendix A must be completed by each board member, officer, manager, owner, partner, director and member of that entity, going back to the level of ownership by a natural person. **An Organizational Chart documenting your organizational structure must be included with this application.**

1. Business Name: Citiva Medical LLC

This is the name that was entered in Section A of the Application for Registration as a Registered Organization.

2. Name: Josh Stanley | 3. Title: CEO

4. Briefly describe the role of this person or entity in the proposed registered organization:

I will provide overall leadership and strategic direction for Citiva Medical LLC, as it develops and operates as a Registered Organization in New York State.

5. Will this person or entity come into contact with medical marijuana or medical marijuana products?
☑ Yes ☐ No

Please refer to proof of fingerprinting immediately following this page.

Any managers who may come in contact with or handle medical marijuana, including medical marijuana products, shall be subject to a fingerprinting process as part of a criminal history background check in compliance with the procedures established by Division of Criminal Justice Services and submission of the applicable fee. Criminal history background checks must be done through Identogo at http://www.identogo.com/FP/NewYork.aspx using the ORI number NY0412500 and the Fingerprint Reason "Control Substance License."

6. Has this person or entity held any position of management or ownership during the preceding ten years of a 10% or greater interest in any other business which manufactured or distributed drugs? ☑ Yes ☐ No

If the answer to this question is yes, provide the name of the business, a statement defining the position of management or ownership held in such business, and any finding of violations of law or regulation by a governmental agency against the business or person or entity.

Josh Stanley - Medical Marijuana Associated Key License #: M01265

Redacted pursuant to N.Y. Public Officers Law, Art.6

SAFRAN
MorphoTrust USA

New York State
EasyPath Network

Applicant: Joshua Stanley
Address: [redacted]
UCN: 151470012175

Date/Time: 5/27/15
Fingerprint Center: New York- Park Place
Agency: NYS Department of Health
Reason Fingerprinted:

Amount Paid: 84.95
Fee Paid By: [/] Credit/Debit card [ ] Money Order
[ ] Agency Acct [ ] Check

Operator ID:

(Agency Copy)

SAFRAN
MorphoTrust USA

New York State
EasyPath Network

Applicant: Joshua Stanley
Address: [redacted]
UCN: 151470012175

Date/Time: 5/27/15
Fingerprint Center: New York- Park Place
Agency: NYS Department of Health
Reason Fingerprinted:

Amount Paid: 84.95
Fee Paid By: [/] Credit/Debit card [ ] Money Order
[ ] Agency Acct [ ] Check

Operator ID:

(Applicant Copy)

Appendix A:
Affidavit for Board Members, Officers, Managers, Owners, Partners, Principal Stakeholders, Directors, and Members

7. Has this person or entity been convicted of a felony or had any type of registration or license suspended or revoked in any administrative or judicial proceeding?
☐ Yes ☑ No

If the answer to either of these questions is "Yes," a statement explaining the circumstances of the felony, suspension or revocation must be provided below.

Although I answered "No" to the above question, please see the attached explanation, which explains that I turned in an expired license and received a minor fine in that one situation. I felt that disclosing this matter, though not required, was the the most appropriate action. Please reach out to our contact person if you need to discuss this. Thank you.

8. Phone: [redacted]	9. Fax: N/A
10. Email: jstanley@citivamedical.com	
11. Residence Address: [redacted]	
12. City [redacted]	13. State: [redacted] 14. ZIP Code: [redacted]

15. Formal Education		Dates Attended		Degree	
Institution	Address	From	To	Degree Received	Date Received
Oklahoma Baptist University	500 W. University St., Shawnee, OK 74804	8/94	5/95	No	
University of Colorado Colorado Springs	1420 Austin Bluffs Pkwy., Colorado Springs	5/96	12/96	No	
University of Northern Colorado UNC	501 20th Street, Greeley, CO 80639	1/98	8/98	No	
Front Range Community College	4616 South Shields Street, Ft. Collins, CO 80526	1/99	5/99	No	
Colorado State University CSU	240 Leway Street, Fort Collins, CO 80523	8/00	5/01	No	

McAllister Law Office, P.C.

36 Steele St. Suite 200
Denver, CO 80206
Phone: 720-722-0048
Fax: 720-542-8391
sean@mcallisterlawoffice.com
www.mcallisterlawoffice.com

To whom it may concern:

As noted in the applicant, Citiva Medical LLC's ("Citiva") application to the New York State Department of Health to manufacture and dispense medical marijuana under the Compassionate Care Act, specifically as set forth in the Affidavit in Appendix A, question 7, no controlling person of the applicant, board member, officer, manager, owner, partner, principal stakeholder, director or member of Citiva designated in the application ever had any type of a registration or a license to manufacture and dispense medical marijuana in any state suspended or revoked. However, in keeping with Citivia's commitment to full transparency, on behalf of our client, we feel it is necessary to disclose that Mr. Josh Stanley was involved with a minor violation of C.R.S. section 12-43.3-701, titled Inspections of Books and Records in Colorado which resulted in him making the voluntary decision to turn in his license on May 20, 2014. Although not required by the Colorado Marijuana Enforcement Division ("MED"), Mr. Stanley's turned in his license as part of a resolution with the MED.

What transpired is as follows: Mr. Josh Stanley paid a Five Thousand Dollar ($5,000.00) fine to the MED for a minor paper work violation. The violation consisted of simply failing to provide information regarding a transport manifest detailing the moving of several plants within the same building. This fine was the first and only fine that Mr. Josh Stanley was required to pay in the entire duration of his license and business that he was operating in Colorado for more than five (5) years. Mr. Josh Stanley opted not to challenge the fine and subsequently, paid the fine immediately in its entirety. The rationale behind not proceeding with challenging the fine assessment was simply based on the fact that Mr. Josh Stanley had already dissolved his partnership and sold his interests associated with this license and violation and believed it to be frivolous to proceed and incur all the expenses associated with such an appeal. .

Furthermore, Mr. Stanley's license expired more than four months prior to the final determination by the MED of the violation, and as previously stated, had already transferred his interest in the business. Mr. Josh Stanley also had given up any and all operational control of the business prior to being cited with this violation to an individual who evidently was incapable of successfully running the business. As a result, Mr. Josh Stanley surrendered his license to operate as he retained no control, zero financial interest, no desire to have his name linked to the business and no intention to open a new business in Colorado. Subsequently, Mr. Josh Stanley never applied to renew the license; although would be permitted by the MED to do so at any time. To further support the foregoing, please see attached hereto for the Final Stipulation Agreement.

To date, Mr. Josh Stanley has actively and successfully been pursuing many opportunities in other legalized States. Accordingly, Mr. Josh Stanley has been focusing his attention and energies in New York to successfully be granted a license to manufacture and dispense medical marijuana; as it his vision to facilitate a pure and genuine medical scientific approach to help the citizen of New York access this type of medication.

Please feel free to contact us if you require any further clarification regarding any of the foregoing. Again, we wanted to make sure we were providing the most accurate answer question 7 of Appendix A as possible.

Sincerely,

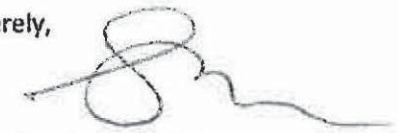

Sean T. McAllister, Esq.

New York Health Department,

My name is Kevin Lamar. I was Josh Stanley's [redacted] partner in [redacted] a former [redacted] licensed medical marihuana business. I write this letter to inform the Health Department that Josh Stanley at the time of the record keeping violation, had no ownership in the company nor did he have any management control. The business had been sold and Josh had previously decided to let his license expire and to move to the State of New York to pursue his scientific work under a more medicinal based structure.

Please feel free to contact me should you require further information.

Sincerely,

Kevin Lamar

Appendix A:
Affidavit for Board Members, Officers, Managers, Owners, Partners, Principal Stakeholders, Directors, and Members

16. Licenses Held: List any and all licenses issued by a governmental or other regulatory entity.

Type of Professional License	License Number	Institution Granting License (Mailing Address, Phone, Email)	Effective Date	Expiration Date
Manufactured Infused Product License	404-00245	CO Department of Revenue, Marijuana Enforcement Division	N/A	N/A
Optional Premises Cultivation Licenses	403-00930 403-00932	CO Department of Revenue, Marijuana Enforcement Division	N/A	N/A
Medical Marijuana Center Licenses	402-00838 402-00622	CO Department of Revenue, Marijuana Enforcement Division	N/A	N/A

17. Employment History for the Past 10 Years: Start with MOST RECENT employment and include employment during the last 10 years. Attach additional copies of page 3, if necessary.

Name of Employer: Citiva Medical LLC

Type of Business: Medical Cannabis

Street Address: 7378 Amboy Road

City: Staten Island | State: NY | Zip Code: 10307

Starting Date of Employment: 2/15 | Ending Date of Employment: Current

Name of Supervisor for Reference: Josh Stanley | Supervisor Phone Number: (720) 237-4504

Position/Responsibilities:

CEO

Reason For Departure: N/A

[redacted]

Appendix A:

Affidavit for Board Members, Officers, Managers, Owners, Partners, Principal Stakeholders, Directors, and Members

Redacted pursuant to N.Y. Public Officers Law, Art.6

Appendix A:

Affidavit for Board Members, Officers, Managers, Owners, Partners, Principal Stakeholders, Directors, and Members

Redacted pursuant to N.Y. Public Officers Law, Art.6

18. Offices Held or Ownership Interest in Other Businesses List any affiliations you have been associated with in the past 10 years. Affiliation, for the purpose of this section, includes serving as either a board member, officer, manager, owner, partner, principal stakeholder, director or member of the organization. Organizations outside of New York State must also be disclosed.		
Have you owned or operated a business or had any affiliations with the operations of a business in New York, in the USA, or in other countries? ☑ Yes ☐ No		
From:	Name and Address of Business:	
To:	Please refer to Question 17 for full disclosure of all businesses owned currently or in the past.	
Business Type:	Office Held/Nature of Interest:	☐ open ☐ closed ☐ proposed
Name, Address and Phone Number of Licensing/Regulatory Agency, if applicable:		

Appendix A:
Affidavit for Board Members, Officers, Managers, Owners, Partners, Principal Stakeholders, Directors, and Members

From:	Name and Address of Business:	
To:		
Business Type:	Office Held/Nature of Interest:	☐ open ☐ closed ☐ proposed
Name, Address and Phone Number of Licensing/Regulatory Agency, if applicable:		
From:	Name and Address of Business:	
To:		
Business Type:	Office Held/Nature of Interest:	☐ open ☐ closed ☐ proposed
Name, Address and Phone Number of Licensing/Regulatory Agency, if applicable:		
From:	Name and Address of Business:	
To:		
Business Type:	Office Held/Nature of Interest:	☐ open ☐ closed ☐ proposed
Name, Address and Phone Number of Licensing/Regulatory Agency, if applicable:		

Appendix A:
Affidavit for Board Members, Officers, Managers, Owners, Partners, Principal Stakeholders, Directors, and Members

19. Affirmative Statement of Qualifications

For individuals who have not previously served as a director/officer nor have had managerial experience, please include a statement below explaining how you are qualified to operate the proposed facility. This statement should include, but not be limited to, any relevant community/volunteer background and experience.

Please refer to my attached biography, which details my experience and capability to play an important role in the operation of the Registered Organization.

20. The undersigned certifies, under penalty of perjury, that the information contained herein or attached hereto is accurate, true, and complete in all material respects.

Signature:	Date: 6/1/2015
Notary Name: Manuel Cougil	Notary Registration Number: 01C06315382
Notary (Notary Must Affix Stamp or Seal)	Date: 06/01/2015

MANUEL A COUGIL
Notary Public - State of New York
NO. 01C06315382
Qualified in New York County
My Commission Expires Nov 24, 2018

Josh Stanley, Founder

As the Company's Founder, Josh Stanley is a leading medical cannabis entrepreneur and advocate working to advance the medical cannabis industry in the United States and throughout the world. Josh has worked in the medical cannabis industry for over eight years and [redacted]

Josh is co-credited with breeding a non-psychoactive strain of the cannabis plant with low THC and high CBD content. This specialized sativa varietal of medical cannabis has proven to be beneficial for varying degrees of epilepsy in both pediatric and adult patients. Josh's effort to help children restore their lives with high-CBD cannabis extracts made international headlines in 2013 and was prominently featured on Sanjay Gupta's highly acclaimed CNN documentary special WEED and WEED 2 in March of 2014.

Josh's commitment to responsible cannabis reform has separated him from the world of "pot culture." He started Colorado's first true political action committee and 501(c)(4), the Medical Marijuana Industry Group, which he co-chaired.

Given Josh's prominence and fame as the Father of the CBD movement, it would be easy to focus solely on the leverage that Josh offers to the company and overlook his enormous scientific experience. As developer of the Charlotte's Web strain, Josh has intimate knowledge of the difficulty in developing medicinal strains that emphasize not just one component (as recreational growers do) but to balance the concentration levels of multiple components of the CBD entourage and develop growing practices and procedures that ensure consistency and quality from batch to batch. His counsel will help ensure Citiva's consistent quality.

In 2010 Josh assisted in the drafting of Colorado House Bill 1284. This was the first bill of its kind to further define and establish Colorado's medicinal cannabis state regulatory structure through the Colorado Department of Revenue. The following year he co-authored Colorado House Bill 1043 and was responsible for writing the research and development portion of the bill. Josh sat on the rules and regulations board of the Colorado Department of Revenue's Medical Marijuana Enforcement Division as well as the rules and regulations board for research and development of the same.

Josh worked with National Geographic Channel on a groundbreaking television series called American Weed that chronicled his family's mission to keep medical marijuana legal in Colorado and tracked his observational research studies and patient successes with medical cannabis.

[redacted]

[redacted] He continues to advocate daily for

patient rights and his role as a leading spokesperson for the medical cannabis industry has led to Colorado becoming the first state in the world to vote in favor of ending cannabis prohibition.

A much sought after speaker, Josh has the ability to sift through the propaganda and fear encompassing the medical cannabis industry and delivers a compassionate appeal to end prohibition.

Appendix A:
Affidavit for Board Members, Officers, Managers, Owners, Partners, Principal Stakeholders, Directors, and Members

Appendix A **must** be completed for all board members, officers, managers, owners, partners, principal stakeholders, directors, and members. For board members, officers, managers, owners, partners, directors, and members of the applicant that are not natural persons, Appendix A must be completed by each board member, officer, manager, owner, partner, director and member of that entity, going back to the level of ownership by a natural person. **An Organizational Chart documenting your organizational structure must be included with this application.**

1. Business Name: Citiva Medical LLC

This is the name that was entered in Section A of the Application for Registration as a Registered Organization.

2. Name: FRANK TURANO | 3. Title CFO

4. Briefly describe the role of this person or entity in the proposed registered organization:
CFO - Involved in all financial aspects of the organization.

5. Will this person or entity come into contact with medical marijuana or medical marijuana products?
☐ Yes ☒ No

Any managers who may come in contact with or handle medical marijuana, including medical marijuana products, shall be subject to a fingerprinting process as part of a criminal history background check in compliance with the procedures established by Division of Criminal Justice Services and submission of the applicable fee. Criminal history background checks must be done through Identogo at [illegible] using the ORI number NY0412500 and the Fingerprint Reason "Control Substance License."

6. Has this person or entity held any position of management or ownership during the preceding ten years of a 10% or greater interest in any other business which manufactured or distributed drugs? ☐ Yes ☒ No

If the answer to this question is yes, provide the name of the business, a statement defining the position of management or ownership held in such business, and any finding of violations of law or regulation by a governmental agency against the business or person or entity.

Appendix A:
Affidavit for Board Members, Officers, Managers, Owners, Partners, Principal Stakeholders, Directors, and Members

7. Has this person or entity been convicted of a felony or had any type of registration or license suspended or revoked in any administrative or judicial proceeding?
☐ Yes ☒ No

If the answer to either of these questions is "Yes," a statement explaining the circumstances of the felony, suspension or revocation must be provided below.

8. Phone: [redacted]		9. Fax N/A	
10. Email: [redacted]			
11. Residence Address: [redacted]			
12. City: [redacted]	13. State: [redacted]	14. ZIP Code: [redacted]	

15. Formal Education		Dates Attended		Degree	
Institution	Address	From	To	Degree Received	Date Received
[illegible]					
THE WHARTON SCHOOL AT THE UNIV. OF PA.	PHILA. PA	9/86	6/90	B.S. - ECONOMICS WITH CONCENTRATION IN ACCOUNTING	6/90

Appendix A:
Affidavit for Board Members, Officers, Managers, Owners, Partners, Principal Stakeholders, Directors, and Members

16. Licenses Held: List any and all licenses issued by a governmental or other regulatory entity.

Type of Professional License	License Number	Institution Granting License (Mailing Address, Phone, Email)	Effective Date	Expiration Date
N/A				

17. Employment History for the Past 10 Years: Start with MOST RECENT employment and include employment during the last 10 years. Attach additional copies of page 3, if necessary.

Redacted pursuant to N.Y. Public Officers Law, Art.6

Appendix A:
Affidavit for Board Members, Officers, Managers, Owners, Partners, Principal Stakeholders, Directors, and Members

Redacted pursuant to N.Y. Public Officers Law, Art.6

Name of Employer:		
Type of Business:		
Street Address:		
City:	State:	Zip Code:
Starting Date of Employment:	Ending Date of Employment:	
Name of Supervisor for Reference:	Supervisor Phone Number:	
Position/Responsibilities:		
Reason For Departure:		
Name of Employer:		
Type of Business:		
Street Address:		
City:	State:	Zip Code:
Starting Date of Employment:	Ending Date of Employment:	
Name of Supervisor for Reference:	Supervisor Phone Number:	
Position/Responsibilities:		
Reason For Departure:		
Name of Employer:		

Appendix A:
Affidavit for Board Members, Officers, Managers, Owners, Partners, Principal Stakeholders, Directors, and Members

Type of Business:		
Street Address:		
City:	State:	Zip Code:
Starting Date of Employment:	Ending Date of Employment:	
Name of Supervisor for Reference:	Supervisor Phone Number:	
Position/Responsibilities:		
Reason For Departure:		
Name of Employer:	Type of Business:	
Street Address:		
City:	State:	Zip Code:
Starting Date of Employment:	Ending Date of Employment:	
Name of Supervisor for Reference:	Supervisor Phone Number:	
Position/Responsibilities:		
Reason For Departure:		

18. Offices Held or Ownership Interest in Other Businesses

List any affiliations you have been associated with in the past 10 years. Affiliation, for the purpose of this section, includes serving as either a board member, officer, manager, owner, partner, principal stakeholder, director or member of the organization. Organizations outside of New York State must also be disclosed.

Have you owned or operated a business or had any affiliations with the operations of a business in New York, in the USA, or in other countries? ☒ Yes ☐ No

Redacted pursuant to N.Y. Public Officers Law, Art.6

Appendix A:
Affidavit for Board Members, Officers, Managers, Owners, Partners, Principal Stakeholders, Directors, and Members

Redacted pursuant to N.Y. Public Officers Law, Art.6

From:	Name and Address of Business:	
To:		
Business Type:	Office Held/Nature of Interest:	☐open ☐closed ☐proposed
Name, Address and Phone Number of Licensing/Regulatory Agency, if applicable:		
From:	Name and Address of Business:	
To:		
Business Type:	Office Held/Nature of Interest:	☐open ☐closed ☐proposed
Name, Address and Phone Number of Licensing/Regulatory Agency, if applicable:		

Frank Turano, CFO

Frank Turano is a native New Yorker, [redacted] Frank earned a Bachelor of Science in Economics, with a dual concentration in Accounting & Finance from the Wharton School at the University of Pennsylvania, where he graduated Magna cum Laude in 1990.

Upon graduation, [redacted]

Appendix A:
Affidavit for Board Members, Officers, Managers, Owners, Partners, Principal Stakeholders, Directors, and Members

19. Affirmative Statement of Qualifications

For individuals who have not previously served as a director/officer nor have had managerial experience, please include a statement below explaining how you are qualified to operate the proposed facility. This statement should include, but not be limited to, any relevant community/volunteer background and experience.

Please refer to my attached biography, which details my experience and capability to play an important role in the operation of the Registered Organization.

20. The undersigned certifies, under penalty of perjury, that the information contained herein or attached hereto is accurate, true, and complete in all material respects.

Signature: Daniel Maydan	Date: 6/2/15
Notary Name: Daniel Maydan	Notary Registration Number: 01MA6324138
Notary (Notary Must Affix Stamp or Seal)	Date: 6/2/2015

DANIEL MAYDAN
Notary Public, State of New York
No. 01MA6324138
Qualified in Richmond County
Commission Expires May 04, 2019

NEW YORK STATE | Department of Health

Medical Marijuana Program
Application for Registration as a Registered Organization

Appendix A:
Affidavit for Board Members, Officers, Managers, Owners, Partners, Principal Stakeholders, Directors, and Members

Appendix A **must** be completed for all board members, officers, managers, owners, partners, principal stakeholders, directors, and members. For board members, officers, managers, owners, partners, directors, and members of the applicant that are not natural persons, Appendix A must be completed by each board member, officer, manager, owner, partner, director and member of that entity, going back to the level of ownership by a natural person. **An Organizational Chart documenting your organizational structure must be included with this application.**

1. Business Name: Citiva Medical LLC

This is the name that was entered in Section A of the Application for Registration as a Registered Organization.

2. Name: Kim Volmar | 3. Title: Chief of Pharmaceutical operations

4. Briefly describe the role of this person or entity in the proposed registered organization:

Chief of Pharmaceutical operations → Oversee and manage dispensary operations

5. Will this person or entity come into contact with medical marijuana or medical marijuana products?
☑ Yes ☐ No Please see proof of fingerprinting immediately following this page

Any managers who may come in contact with or handle medical marijuana, including medical marijuana products, shall be subject to a fingerprinting process as part of a criminal history background check in compliance with the procedures established by Division of Criminal Justice Services and submission of the applicable fee. Criminal history background checks must be done through Identogo at http://www.Identogo.com/FP/NewYork.aspx using the ORI number NY0412500 and the Fingerprint Reason "Control Substance License."

6. Has this person or entity held any position of management or ownership during the preceding ten years of a 10% or greater interest in any other business which manufactured or distributed drugs? ☑ Yes ☐ No

If the answer to this question is yes, provide the name of the business, a statement defining the position of management or ownership held in such business, and any finding of violations of law or regulation by a governmental agency against the business or person or entity.

Redacted pursuant to N.Y. Public Officers Law, Art.6

The NY Office of Professional Discipline conducted an inspection of the [redacted] and found some very minor compliance issues. These did not rise to the level of formal disciplinary action by the Board of Regents. The OPD imposed a "minor and technical" violation fine.

L-1 Enrollment Services

New York State
EasyPath Network

Applicant: VOLMAN, KIM.
Address: [redacted]

OCA: [redacted]
Date Fingerprinted: 20150527

Fingerprint Center: L087
Agency: NYS Dept of Health Bur Narcotic Enforcement
Reason Fingerprinted:
CONTROLLED SUBSTANCE
Amount Paid: 84.95
Fee Paid By: US BANK EPAY

Operator ID: 004

(Agency Copy)

L-1 Enrollment Services

New York State
EasyPath Network

Applicant: VOLMAN, KIM.
Address: [redacted]

OCA: [redacted]
Date Fingerprinted: 20150527

Fingerprint Center: L087
Agency: NYS Dept of Health Bur Narcotic Enforcement
Reason Fingerprinted:
CONTROLLED SUBSTANCE
Amount Paid: 84.95
Fee Paid By: US BANK EPAY

Operator ID: 004

(Agency Copy)

SAFRAN
MorphoTrust USA

New York State
EasyPath Network

Applicant: Kim Volman
Address: [redacted]
UCN: 151470087757

Date/Time: 5/27/15
Fingerprint Center: New York- Park Place
Agency: NYS Department of Health
Reason Fingerprinted:

Amount Paid: 84.95
Fee Paid By: [/] Credit/Debit card [ ] Money Order
[ ] Agency Acct [ ] Check

Operator ID:

(Agency Copy)

SAFRAN
MorphoTrust USA

New York State
EasyPath Network

Applicant: Kim Volman
Address: [redacted]
UCN: 151470087757

Date/Time: 5/27/15
Fingerprint Center: New York- Park Place
Agency: NYS Department of Health
Reason Fingerprinted:

Amount Paid: 84.95
Fee Paid By: [/] Credit/Debit card [ ] Money Order
[ ] Agency Acct [ ] Check

Operator ID:

(Applicant Copy)

Appendix A:
Affidavit for Board Members, Officers, Managers, Owners, Partners, Principal Stakeholders, Directors, and Members

7. Has this person or entity been convicted of a felony or had any type of registration or license suspended or revoked in any administrative or judicial proceeding?
☐ Yes ☑ No

If the answer to either of these questions is "Yes," a statement explaining the circumstances of the felony, suspension or revocation must be provided below.

8. Phone: [redacted]		9. Fax	
10. Email: KVolman@CitivaMedical.com			
11. Residence Address: [redacted]			
12. City: [redacted]	13. State: [redacted]	14. ZIP Code: [redacted]	

15. Formal Education		Dates Attended		Degree	
Institution	Address	From	To	Degree Received	Date Received
St John's University	8000 Utopia Pkwy Jamaica, NY 11439	1992	1997	Bachlor's of Science	June 1997

Appendix A:
Affidavit for Board Members, Officers, Managers, Owners, Partners, Principal Stakeholders, Directors, and Members

16. Licenses Held: List any and all licenses issued by a governmental or other regulatory entity.

Type of Professional License	License Number	Institution Granting License (Mailing Address, Phone, Email)	Effective Date	Expiration Date
New York State Licensed Pharmacist	048368	NYS Board of Pharmacy opinfo@nysed.gov 518-474-3819	11/14/01	11/31/16

17. Employment History for the Past 10 Years: Start with MOST RECENT employment and include employment during the last 10 years. Attach additional copies of page 3, if necessary.

Redacted pursuant to N.Y. Public Officers Law, Art.6

Appendix A:
Affidavit for Board Members, Officers, Managers, Owners, Partners, Principal Stakeholders, Directors, and Members

Redacted pursuant to N.Y. Public Officers Law, Art.6

Appendix A:
Affidavit for Board Members, Officers, Managers, Owners, Partners, Principal Stakeholders, Directors, and Members

Redacted pursuant to N.Y. Public Officers Law, Art.6

Reason For Departure:		
Name of Employer:		Type of Business:
Street Address:		
City:	State:	Zip Code:
Starting Date of Employment:		Ending Date of Employment:
Name of Supervisor for Reference:		Supervisor Phone Number:
Position/Responsibilities:		
Reason For Departure:		

18. Offices Held or Ownership Interest in Other Businesses

List any affiliations you have been associated with in the past 10 years. Affiliation, for the purpose of this section, includes serving as either a board member, officer, manager, owner, partner, principal stakeholder, director or member of the organization. Organizations outside of New York State must also be disclosed.

Have you owned or operated a business or had any affiliations with the operations of a business in New York, in the USA, or in other countries? ☑ Yes ☐ No

Redacted pursuant to N.Y. Public Officers Law, Art.6

Appendix A:
Affidavit for Board Members, Officers, Managers, Owners, Partners, Principal Stakeholders, Directors, and Members

From: To:	Name and Address of Business:	
Business Type:	Office Held/Nature of Interest:	☐open ☐closed ☐proposed
Name, Address and Phone Number of Licensing/Regulatory Agency, if applicable:		
From: To:	Name and Address of Business:	
Business Type:	Office Held/Nature of Interest:	☐open ☐closed ☐proposed
Name, Address and Phone Number of Licensing/Regulatory Agency, if applicable:		
From: To:	Name and Address of Business:	
Business Type:	Office Held/Nature of Interest:	☐open ☐closed ☐proposed
Name, Address and Phone Number of Licensing/Regulatory Agency, if applicable:		

Appendix A:
Affidavit for Board Members, Officers, Managers, Owners, Partners, Principal Stakeholders, Directors, and Members

19. Affirmative Statement of Qualifications

For individuals who have not previously served as a director/officer nor have had managerial experience, please include a statement below explaining how you are qualified to operate the proposed facility. This statement should include, but not be limited to, any relevant community/volunteer background and experience.

Please refer to my attached biography, which details my experience and capability to play an important role in the operation of the Registered Organization.

20. The undersigned certifies, under penalty of perjury, that the information contained herein or attached hereto is accurate, true, and complete in all material respects.

Signature:	Date: 6/1/2015
Notary Name: JAYANT C PATEL	Notary Registration Number: 01PA4901007
Notary (Notary Must Affix Stamp or Seal)	Date: 06/01/2015

JAYANT C. PATEL
Notary Public, State of New York
No. 01PA4901007
Qualified in Queens County
Certificate Filed in New York County
Commission Expires July 13, 2015

Kim Volman, Chief of Pharmaceutical Operations, has over 20 years of leadership experience in the pharmaceutical industry.

Kim, earned a Bachelor of Science on Pharmacy, at St John's University, where he graduated in 1997.

Redacted pursuant to N.Y. Public Officers Law, Art.6

Kim's success in this company stems from providing care to an individual based on that patient's specific needs. Kim has extensive experience in Pharmaceutical Compounding and implemented various new compounding techniques in order to diminish patient tolerance to opioids.

Kim has actively worked with many Managed Long Term Care Plans in New York State, Nursing, Home Health Care Aid Organizations, JASA, and FEGS creating cost saving services such as Medication Blister Packing. Thus, improving patient medication compliance and safety, while decreasing health care costs to the patient.

Kim is an active member of PSSNY and SUN B which helps make a difference for seniors in the community. He continues to work in the Pharmacy industry developing better and more cost effective methods of providing optimum patient health care while diminishing patient drug dependence to certain medications.

Appendix A:
Affidavit for Board Members, Officers, Managers, Owners, Partners, Principal Stakeholders, Directors, and Members

Appendix A **must** be completed for all board members, officers, managers, owners, partners, principal stakeholders, directors, and members. For board members, officers, managers, owners, partners, directors, and members of the applicant that are not natural persons, Appendix A must be completed by each board member, officer, manager, owner, partner, director and member of that entity, going back to the level of ownership by a natural person. **An Organizational Chart documenting your organizational structure must be included with this application.**

1. Business Name: CITIVA MEDICAL, LLC

This is the name that was entered in Section A of the Application for Registration as a Registered Organization.

2. Name: Michael David Zumpano | 3. Title: Member

4. Briefly describe the role of this person or entity in the proposed registered organization:

Member

5. Will this person or entity come into contact with medical marijuana or medical marijuana products?
☐ Yes ☑ No

Any managers who may come in contact with or handle medical marijuana, including medical marijuana products, shall be subject to a fingerprinting process as part of a criminal history background check in compliance with the procedures established by Division of Criminal Justice Services and submission of the applicable fee. Criminal history background checks must be done through Identogo at http://www.identogo.com/FP/NewYork.aspx using the ORI number NY0412500 and the Fingerprint Reason "Control Substance License."

6. Has this person or entity held any position of management or ownership during the preceding ten years of a 10% or greater interest in any other business which manufactured or distributed drugs? ☐ Yes ☑ No

If the answer to this question is yes, provide the name of the business, a statement defining the position of management or ownership held in such business, and any finding of violations of law or regulation by a governmental agency against the business or person or entity.

Appendix A:
Affidavit for Board Members, Officers, Managers, Owners, Partners, Principal Stakeholders, Directors, and Members

7. Has this person or entity been convicted of a felony or had any type of registration or license suspended or revoked in any administrative or judicial proceeding?
☐ Yes ☑ No

If the answer to either of these questions is "Yes," a statement explaining the circumstances of the felony, suspension or revocation must be provided below.

8. Phone: [redacted]	9. Fax: N/A	
10. Email: [redacted]		
11. Residence Address: [redacted]		
12. City: [redacted]	13. State: [redacted]	14. ZIP Code: [redacted]

15. Formal Education		Dates Attended		Degree	
Institution	Address	From	To	Degree Received	Date Received
Fresno City College	1101 E. University Ave. Fresno, CA 93741	11/8/08	2/22/10	Pre-hospital Medicine/ Paramedic	2/28/2010
Long Beach City College	4901 Carson st. Long Beach, CA 90808	9/10/05	1/1/06	Emergency Medical Technician	2/12/2006

Appendix A:
Affidavit for Board Members, Officers, Managers, Owners, Partners, Principal Stakeholders, Directors, and Members

16. Licenses Held: List any and all licenses issued by a governmental or other regulatory entity.

Type of Professional License	License Number	Institution Granting License (Mailing Address, Phone, Email)	Effective Date	Expiration Date
Georgia State EMT-Paramedic	12068	State of Georgia Division of Emergency Preparedness and Response	4/29/2013	06/30/2016

17. Employment History for the Past 10 Years: Start with MOST RECENT employment and include employment during the last 10 years. Attach additional copies of page 3, if necessary.

Name of Employer: Gwinnett County Fire Department

Type of Business: Fire and Emergency services

Street Address: 408 Hurricane Shoals rd.

City: Lawrenceville | State: GA | Zip Code: 30046

Starting Date of Employment: 4/29/2013 | Ending Date of Employment: currently employed

Name of Supervisor for Reference: [redacted] | Supervisor Phone Number: [redacted]

Position/Responsibilities:

-Firefighter II Paramedic.

Fire Suppression, rescue, building planning, public relation events, education, inspections. Emergency medical rescue at paramedic level.

Reason For Departure: N/A

Redacted pursuant to N.Y. Public Officers Law, Art.6

Appendix A:
Affidavit for Board Members, Officers, Managers, Owners, Partners, Principal Stakeholders, Directors, and Members

Redacted pursuant to N.Y. Public Officers Law, Art.6

Appendix A:
Affidavit for Board Members, Officers, Managers, Owners, Partners, Principal Stakeholders, Directors, and Members

Redacted pursuant to N.Y. Public Officers Law, Art.6

Name of Employer: Huntington Beach Fire Department		Type of Business: Fire and Emergency Service
Street Address: 2000 Main st. 5th floor.		
City: Huntington Beach	State: CA	Zip Code: 92648
Starting Date of Employment: 3/18/2008		Ending Date of Employment: 10/5/2012
Name of Supervisor for Reference: [redacted]		Supervisor Phone Number: [redacted]
Position/Responsibilities: Ambulance Operator -Emergency medical treatment and transport for fire department. Provided emergency medical care at the EMT-B level. Performed daily station and ambulance checks and maintenance. Minor billing duties.		
Reason For Departure: [redacted]		

18. Offices Held or Ownership Interest in Other Businesses

List any affiliations you have been associated with in the past 10 years. Affiliation, for the purpose of this section, includes serving as either a board member, officer, manager, owner, partner, principal stakeholder, director or member of the organization. Organizations outside of New York State must also be disclosed.

Have you owned or operated a business or had any affiliations with the operations of a business in New York, in the USA, or in other countries? ☐ Yes ☑ No

From:	Name and Address of Business:	
To:		
Business Type:	Office Held/Nature of Interest:	☐ open ☐ closed ☐ proposed
Name, Address and Phone Number of Licensing/Regulatory Agency, if applicable:		

Appendix A:
Affidavit for Board Members, Officers, Managers, Owners, Partners, Principal Stakeholders, Directors, and Members

16. Licenses Held: List any and all licenses issued by a governmental or other regulatory entity.

Type of Professional License	License Number	Institution Granting License (Mailing Address, Phone, Email)	Effective Date	Expiration Date

17. Employment History for the Past 10 Years: Start with MOST RECENT employment and include employment during the last 10 years. Attach additional copies of page 3, if necessary.

Redacted pursuant to N.Y. Public Officers Law, Art.6

Appendix A:

Affidavit for Board Members, Officers, Managers, Owners, Partners, Principal Stakeholders, Directors, and Members

Redacted pursuant to N.Y. Public Officers Law, Art.6

Appendix A:
Affidavit for Board Members, Officers, Managers, Owners, Partners, Principal Stakeholders, Directors, and Members

From: To:	Name and Address of Business:	
Business Type:	Office Held/Nature of Interest:	☐open ☐closed ☐proposed
Name, Address and Phone Number of Licensing/Regulatory Agency, if applicable:		
From: To:	Name and Address of Business:	
Business Type:	Office Held/Nature of Interest:	☐open ☐closed ☐proposed
Name, Address and Phone Number of Licensing/Regulatory Agency, if applicable:		
From: To:	Name and Address of Business:	
Business Type:	Office Held/Nature of Interest:	☐open ☐closed ☐proposed
Name, Address and Phone Number of Licensing/Regulatory Agency, if applicable:		

Appendix A:
Affidavit for Board Members, Officers, Managers, Owners, Partners, Principal Stakeholders, Directors, and Members

19. Affirmative Statement of Qualifications

For individuals who have not previously served as a director/officer nor have had managerial experience, please include a statement below explaining how you are qualified to operate the proposed facility. This statement should include, but not be limited to, any relevant community/volunteer background and experience.

As indicated above, I have professional business experience that will allow me to support the successful development and operation of Citiva Medical LLC. I will bring a perspective of general business operation that I believe will complement the experience of the management team, which has the expertise in the medical marihuana industry and ancillary program elements. Although I will not be involved in day-to-day operations, I will be available as a resource to the management team, and believe that my specific capabilities will make the Citiva team a well-balanced organization.

20. The undersigned certifies, under penalty of perjury, that the information contained herein or attached hereto is accurate, true, and complete in all material respects.

Signature:	Date: 6/4/15
Notary Name: Dylan Akins	Notary Registration Number:
Notary (Notary Must Affix Stamp or Seal)	Date: 6/4/15

DYLAN AKINS NOTARY PUBLIC GWINNETT COUNTY, GEORGIA MY COMMISSION EXPIRES OCTOBER 9, 2018

Commission Exp. 10/9/2018

CITIVA MEDICAL LLC

MEDICAL MARIHUANA PROGRAM

APPENDIX B

ARCHITECTURAL PROGRAM

CITIVA MEDICAL LLC

OVERVIEW OF APPENDIX B

Citiva Medical LLC has identified one (1) Manufacturing Facility and four (4) Dispensary Facility sites for its proposed project. The following provides an overview of each of the five (5) sites:

Manufacturing Facility #1 – Romulus

- Address: 5786 State Route 96, Romulus (Seneca County), New York 14541

Dispensing Facility #1 – Rochester

- Address: 4 Hinchey Road, Rochester, NY 14624
- Parcel #: 119.20-3-36.1-4-26
- Description: 2,677 SF End Cap space within a 9,745 SF Retail building with a total of four separate spaces. Plenty of at-grade parking. Directly at the Chili Ave exit off Interstate 390.
- Distance and Travel Time from Manufacturing Facility: 66 Miles; 1 hr 15 mins

Dispensing Facility #2 – Syracuse

- Address: 5788 East Circle Drive, Cicero, NY 13039
- Parcel #: 312289-035-01-06.2
- Description: Approximately 1 acre parcel with a free standing 2,122 SF fromer bank branch. Over 30 parking spaces. Located at the East Circle Drive exit of both I-81 and I-480.
- Distance and Travel Time from Manufacturing Facility: 62 Miles; 1 hr 10 mins

Dispensing Facility #3 – Hudson Valley

- Address: 2290 South Road, Poughkeepsie NY, 12601
- Parcel #: 134689-6159-01-211992-0000
- Description: 1,932 SF End Cap space within a 14,200 SF Retail Building with three tenant spaces. Other tenants include Half Time Beverage and Crew Restaurant. Plenty of at grade surface parking immediately adjacent to the entrance. Located on a main commercial corridor of Route 9.
- Distance and Travel Time from Manufacturing Facility: 230 Miles; 4 hr 10 mins

Dispensing Facility #4 – Manhattan

- Address: 35 1st Avenue, New York, New York 10003
- Parcel: Borough of Manhattan, Block 444, Lot 42
- Description: Approximately 1,000 SF of Ground Floor space with basement. Near the corner of First Avenue and 2nd street, one block north of Houston St and 5 blocks from a full interchange of the FDR Drive and just one block from the Lower East Side/Second Ave Subway Station.
- Distance and Travel Time from Manufacturing Facility: 254 Miles; 4 hr 40 mins

To this end, enclosed are the Appendix B's for the five (5) total sites. Please note that Attachment No. 1 is being provided for all sites except Building #1 for the Manufacturing Site because that building did not require the use of additional pages. All information regarding Building #1 at the Manufacturing Site is included in the document from the Application.

Appendix B: Architectural Program

A SEPARATE "APPENDIX B" SHALL BE COMPLETED FOR EACH SEPARATE BUILDING AND/OR FACILITY INCLUDED IN THE ORGANIZATION'S BUSINESS PLAN

COMPANY INFORMATION

Business Name:	Citiva Medical
Facility Type:	Manufacturing Facility ■ Dispensing Facility ☐
Use and Occupancy Classification:	F-1. Moderate Hazard Occupancy
Building Construction Type and Classification:	II-B with an automatic sprinkler system
Facility Address:	Building 1 Greenhouse 5786 State Route 96, Romulus, New York 14541
Primary Contact Telephone number:	Michael Caridi 516-852-2549
Primary Contact Fax number:	mcaridi@citivamedical.com

PART I – ARCHITECTURAL PROGRAM & CONSTRUCTION TIMELINE: Refer to attached construction timeline.

Applicant shall identify planning requirements, including but not limited to:

☐	TOWN BOARD APPROVAL
■	PLANNING BOARD APPROVAL
☐	ZONING BOARD OF APPEALS APPROVAL
■	PREPARATION OF CONSTRUCTION DOCUMENTS
■	BUILDING PERMIT
■	BIDDING PHASE
■	CONTRACT AWARD PHASE PER EACH APPLICABLE CONTRACTOR (Identify all that apply)
■	COMMENCEMENT OF CONSTRUCTION
■	COMPLETION OF CONSTRUCTION

Appendix B – Architectural Program

PART II – SITE PLAN(S)

Applicant shall provide the appropriate details for each of the following by identifying the location and dimension on the Site Plan attached to the application for each building location.

Refer to attached Site Plan.

- ☐ Entrance and Exits
- ☐ Public Parking Spaces
- ☐ Staff Parking Spaces
- ☐ Accessible Parking Spaces
- ☐ Accessible Route(s)
- ☐ Fire Lane and/or Fire Apparatus Road
- ☐ Percentage of Green Space
- ☐ Location of Emergency Power Systems
- ☐ Loading & Unloading
- ☐ Security Gates & Fences

PART III – ENERGY SOURCES & ENGINEERING SYSTEMS:

Applicant shall provide the following minimum information to outline the specifications relating to the energy sources and engineering systems of each building included in the application.

Energy Source:

- ■ Natural Gas
- ☐ Oil
- ■ Electric
- ☐ Solar
- ☐ Other _____

Engineering Systems:

- ■ Heating System: Type Hot Water, Size 24,000 MBH Efficiency 90%,
  Ventilation Requirements Green House @ 468,000 CFM, Head House @ 27,000 CFM
- ■ Cooling System: TypeChilled H20 Size 1,080 ton Efficiency .65 KW/TR,
  Ventilation Requirements Green House @ 468,000 CFM, Head House @ 27,000 CFM
- ■ Ventilation & Humidification Systems:
  Type None, Size _____, Efficiency _____,
  Ventilation Requirements Green House @ 468,000 CFM, Head House @ 27,000 CFM
- ■ Electrical Distribution Available 480V/3 Phase
- ■ Water Supply: Municipal Water Service Domestic or Private Well Water Irrigation
- ■ Sewage: Municipal Sewer System X or Private Septic System _____
- ■ Emergency Power System:
  Type Diesel, Size 1,000 kw Efficiency 60-80%,

Appendix B – Architectural Program

PART IV – BUILDING CODE COMPLIANCE: (pages 3-13)

CHECK ALL APPLICABLE CODES FOR THE FACILITY

- [x] 2010 BUILDING CODE OF NYS
- [x] 2010 FIRE CODE OF NYS
- [x] 2010 PLUMBING CODE OF NYS
- [x] 2010 MECHANICAL CODE OF NYS
- [x] 2010 FUEL GAS CODE OF NYS
- [x] 2010 PROPERTY MAINTENANCE CODE OF NYS
- [x] 2010 ENERGY CONSERVATION CONSTRUCTION CODE OF NYS
- [x] 2012 IECC COMMERCIAL PROVISIONS
- [ ] 2010 EXISTING BUILDING CODE OF NYS
- [x] NEC NATIONAL ELECTRIC CODE, (Specify Applicable Version) 2008 Edition
- [ ] 2014 NY CITY CONSTRUCTION CODE
- [ ] 2008 NY CITY CONSTRUCTION CODE
- [ ] 1968 NY CITY CONSTRUCTION CODE
- [x] NFPA 101-06 LIFE SAFETY CODE
- [x] ICC/ANSI A117.1-03 ACCESSIBLE AND USABLE BUILDINGS AND FACILITIES
- [x] OTHER

Appendix B – Architectural Program

Select Project Type:
Check all that apply. Refer to the Existing Building Code for definitions.

- ■ New Building
- ☐ Repair
- ☐ Alteration Level 1
- ☐ Alteration Level 2
- ☐ Alteration Level 3
- ☐ Change of Occupancy
- ☐ Addition
- ☐ Historic Building
- ☐ Demolition
- ☐ Chapter 3. Prescriptive Compliance Method
- ☐ Chapter 13. Performance Compliance Method

Select Work Involved:
Check all that apply.

- ■ General Construction
- ■ Roofing
- ☐ Asbestos Abatement/Environmental
- ■ Fire Alarm
- ■ Structural
- ■ Mechanical
- ■ Plumbing
- ■ Electrical
- ■ Site Work
- ■ Sprinkler
- ☐ Elevators
- ☐ Other: _____

CODE COMPLIANCE REVIEW

Applicant shall provide all applicable information in regards to the code topic and section listed below.

1. Code Compliance Review is based on the 2010 NY State Building Code for New Construction. If any other building code applies to the location or type of construction, provide applicable code and sections that most closely relates and references the code topic and information in the code sections listed below. Provide appropriate abbreviations for other applicable codes, such as: **FC:** ***Fire Code*****, PC:** ***Plumbing Code*****, MC:** ***Mechanical Code*****, FGC:** ***Fuel Gas Code*****, ECCC:** ***Energy Conservation Code.***
2. Provide the Required standard for each applicable code section. (i.e.: area, quantity, classification type, materials, hourly separation, etc.). If section does not apply, indicate one of the following with explanation: **NA:** *Not Applicable*, **NR:** *Not Required*, **NP:** *Not Permitted*
3. Provide your facilities "Actual" value for each required standard as per applicable code section.

No.	Topic	NYS Building Code Section	Other Code[1] (as Stated Above) & Section	Minimum Information Required to be Identified for this building/facility on the Building or Site Plan(s)	Required Code Value[2] /Allowed Code Value	Facility's Actual Value[3]
1	Use & Occupancy Classification	302.1 - 312		Use & occupancy of this facility. Identify all applicable materials, class and quantities regarding Table 307.1.	F-1 Moderate Hazard Occupancy Per Table 307.1, no limit on CO2 (inert gas) planned for use.	F-1 Moderate Hazard Occupancy

Appendix B – Architectural Program

No.	Topic	NYS Building Code Section	Other Code[1] (as Stated Above) & Section	Minimum Information Required to be Identified for this building/facility on the Building or Site Plan(s)	Required Code Value[2] /Allowed Code Value	Facility's Actual Value[3]
2	Combustible Storage	413		All combustible storage areas and rooms, as per applicable Building and Fire Codes. Identify all combustible stored materials, area and room dimensions, all required fire separations, and exit requirements.	Not Applicable. No Combustible Storage in Building Plan.	
3	Hazardous Materials	414		All hazardous materials stored or used as per applicable Building and Fire Codes. Identify all combustible stored materials, area and room dimensions, all required fire separations, and exit requirements.	Not Applicable	
4	Hazardous Materials Control Areas	414.2		Provide additional information indicating number, size, materials stored, and quantity of each material.	Not Applicable	
5	Building Area & Height	501-507		Provide the building area & height Provide all calculations and cite applicable code sections for increased Building Area & Heights allowed per building code(s).	Unlimited Area Building per 507.3 (Group F, One Story, 60' Yards, Sprinkler)	85,845 SF
6	Incidental Use Areas	508.2		Identify all Incidental Use Areas and required fire separation of occupancies on Building Plans.	Boiler Room: 1 Hour or Sprinkler	Not Applicable Boiler in separate dedicated building

Appendix B – Architectural Program

No.	Topic	NYS Building Code Section	Other Code[1] (as Stated Above) & Section	Minimum Information Required to be Identified for this building/facility on the Building or Site Plan(s)	Required Code Value[2] /Allowed Code Value	Facility's Actual Value[3]
7	Mixed Occupancies	508.3		Provide analysis with code cited, and required fire separation of occupancies. Identify required fire separation of occupancies on Building Plan(s).	Not Applicable F-1 Occupancy Throughout	
8	Nonseparated Uses	508.3.2		Provide analysis with code cited, and required fire separation of occupancies. Identify required fire separation of occupancies on Building Plan(s).	Not Applicable F-1 Occupancy Throughout	
9	Separated Uses (Ratio < 1)	508.3.3		Provide analysis with code cited, and required fire separation of occupancies. Identify required fire separation of occupancies on Building Plan(s).	Not Applicable	
10	Construction Classification	602		Provide Construction Classification per each building included in Application.		Type II-B
11	Fire Resistance Rating Req'm't for Building Elements	Table 601		Provide Fire Resistance Rating per each building element as per Table 601. Identify rating & elements on Building Plans.	No rating requirements for Type II-B Construction	

Appendix B – Architectural Program

No.	Topic	NYS Building Code Section	Other Code[1] (as Stated Above) & Section	Minimum Information Required to be Identified for this building/facility on the Building or Site Plan(s)	Required Code Value[2] /Allowed Code Value	Facility's Actual Value[3]
12	Exterior Wall Fire-Resistance Rating	Table 602		Identify required fire resistance rating of exterior walls on Building Plan(s).	Not Required. Fire separation distance greater than 30'.	Fire separation distance is 60' minimum for an unlimited area building.
13	Exterior Fire Separation Distance	Table 602		Identify required fire separation distance of exterior walls between Buildings on Plan.	Minimum fire separation distance of 60' for an unlimited area building.	Fire separation distance is 60' minimum for an unlimited area building.
14	Fire Walls	705		Provide code information and identify all applicable required Fire Wall(s) and fire resistance requirement on Building Plans.	Not Required.	Not Required.
15	Fire Barriers	706		Provide code information and identify all applicable required Fire Barrier(s) and fire resistance requirement on Building Plans.	Not Required.	Not Required.
16	Shaft Enclosures	707		Provide code information and identify all applicable required Shaft Wall(s) and fire resistance requirement on Building Plans.	Not Required.	Not Required.
17	Fire Partitions	708		Provide code information and identify all applicable required Fire Partition(s) and fire resistance requirement on Building Plans.	Not Required.	Not Required.

Appendix B – Architectural Program

No.	Topic	NYS Building Code Section	Other Code[1] (as Stated Above) & Section	Minimum Information Required to be Identified for this building/facility on the Building or Site Plan(s)	Required Code Value[2] /Allowed Code Value	Facility's Actual Value[3]
18	Horizontal Assemblies	711		Provide code information and identify all applicable required Horizontal Assemblies and fire resistance requirement on Building Plans.	Not Required.	Not Required.
19	Fire Protection: Sprinkler System	903		Indicate Type of Sprinkler System: ■ NFPA 13 ☐ NFPA 13 R ☐ NFPA 13D Provide code information of all applicable requirements for Automatic Sprinkler Systems with code section cited.		Fully Sprinklered
20	Alt. Fire Extinguishing System	904		Provide code information of all applicable requirements for Alternative Automatic Fire-Extinguishing Systems with code section(s) cited.	Not Applicable	Not Applicable.
21	Standpipe System	905		Provide code information of all applicable requirements for Standpipe Systems with code section(s) cited.	Not Required.	Not Required.
22	Fire Alarm & Detection Systems	907		Provide code information of all applicable requirements for Fire Alarm System(s) with code section cited. Indicate Type of Fire Alarm System ■ Addressable ☐ Hardwired (zoned)		Addressable fire alarm system to be installed.

Appendix B – Architectural Program

No.	Topic	NYS Building Code Section	Other Code[1] (as Stated Above) & Section	Minimum Information Required to be Identified for this building/facility on the Building or Site Plan(s)	Required Code Value[2] /Allowed Code Value	Facility's Actual Value[3]
23	Emergency Alarm System	908	FC 908.3	Provide code information of all applicable requirements for Emergency Alarm Systems with code section cited.	Gas detection associated with CO2 enrichment per FC 908.3.	Gas detection associated with CO2 enrichment per FC 908.3.
24	Fire Department Connections	912		Identify Fire Department connections in accordance with NFPA applicable standard.		Refer to Site Plan
25	Exits	1001.1 &2		Identify on the Building Plans and documents, per each door, the following information: door width, door height, direction of swing, type of construction, hourly rating, and door closures.	Min. Door Width = 36" Min. Door Height = 80" Swing in direction of egress with load > 50.	
26	Occupant Load	1004 & Table 1004.1.1		Identify the use/name of each room, dimensions of each room, and Occupant Loads per each room on the Building Plans.	Business: 1:100 Agricultural: 1:300 Industrial: 1:200 Locker Rooms: 1:50 Gross	Total Occupant Load: 397 Occupants
27	Egress Width	1005		Provide egress widths & cite applicable code section(s) and requirement(s) on the Building Plans	Stairways: .2"/occupant Other: .15"/occupant F-1 with sprinkler	Max. required egress width is 35.25" with 36" provided.
28	Accessible Means of Egress	1007.1		Provide accessible means of egress as per Section 1007 & cite applicable code section(s) and requirement(s) on the Building Plans.		Accessibility provided at all means of egress.

Appendix B – Architectural Program

No.	Topic	NYS Building Code Section	Other Code[1] (as Stated Above) & Section	Minimum Information Required to be Identified for this building/facility on the Building or Site Plan(s)	Required Code Value[2] /Allowed Code Value	Facility's Actual Value[3]
29	Doors, Gates, and Turnstiles	1008		Means of egress doors shall meet the requirements of this section.		Refer to Building Plan
30	Interior Stairs	1009		Identify the following information for each stairway on the Building Plan(s): the width of stairways; the height, width, depth and number of risers and treads; dimensions of landings; stairway construction type; and handrail height.		Not Applicable. No interior stairs in Building Plan.
31	Ramps	1010.1		Identify the following information of each ramp, on the Building Plan(s): width; total vertical rise; length of ramp; and handrail height.		Not Applicable. No ramps in Building Plan.
32	Common Path of Travel	1014.3		Identify on the Building Plan(s): the length of the "Common Path of Travel" per each room as per applicable building code requirements.	Common Path of Travel Max @ 100' for F-1 with sprinklers	Common Path of Travel 58' actual maximum.
33	Exit Doorway Arrangement	1015		Identify on the Building Plan(s): applicable building code requirements for all Exits and Exit Access Doorways per each room and required exits in all buildings.	Two exits required from space with load > 49 for F-1 with sprinklers	Two exits required and provided [redacted]
34	Corridor Fire Rating	1017.1		Identify, on the Building Plan(s): all corridors with required fire resistance and the applicable fire rating.	Not Required in sprinklered F-1	

Appendix B – Architectural Program

No.	Topic	NYS Building Code Section	Other Code[1] (as Stated Above) & Section	Minimum Information Required to be Identified for this building/facility on the Building or Site Plan(s)	Required Code Value[2] /Allowed Code Value	Facility's Actual Value[3]
35	Corridor Width	1017.2		Identify on the Building Plan(s): the width of all corridors. Provide applicable code section(s) and requirement(s).	Min. corridor width of 44". Can be reduced to 36" with load < 50	Provided corridor width of 60" min. provided.
36	Dead End Corridor	1017.3		Corridors shall not exceed the maximum dead end corridor length as per applicable code.	Dead end corridors not to exceed 50' for F-1 with sprinklers.	Maximum dead end corridor is 7'-0" in length.
37	Number of Exits and Continuity	1019		Identify on the Building Plan(s): required number of exits, continuity and arrangement as per the applicable code requirements.	Two exits min. per story for load < 500. Exits separated by 1/3 diagonal distance with sprinklers.	[redacted] exits provided for story
38	Vertical Exit Enclosures	1020		Identify on the Building Plan(s): all applicable code requirements for each Vertical Exit Enclosure.	Not Required.	Not Required.
39	Exit Passageways	1021		Identify on the Building Plan(s): all applicable code requirements for each Exit Passageway.	Not Required.	Not Required.
40	Horizontal Exits	1022		Identify on the Building Plan(s): all applicable code requirements for each Horizontal Exit.	Not Required.	Not Required.

Appendix B – Architectural Program

No.	Topic	NYS Building Code Section	Other Code[1] (as Stated Above) & Section	Minimum Information Required to be Identified for this building/facility on the Building or Site Plan(s)	Required Code Value[2] /Allowed Code Value	Facility's Actual Value[3]
41	Exterior Exit Ramps & Stairways	1023		Identify on the Building Plan(s): all applicable code requirements for each exterior exit ramps and stairways.		Not Applicable. No exterior ramps & stairways on Building Plan.
42	Exit Discharge	1024		Identify on the Building Plan(s): all applicable code requirements for each Exit Discharge.		Refer to Building Plan
43	Accessibility	1101.1 - 1110 & ICC/A117. 1(03)		Identify on the Building Plan(s): all applicable code requirements such that the design and construction of each building/facility provides accessibility to physically disabled persons.		Refer to Building Plan
44	Energy Conservation	2010 NYS ECCC & IECC 2012		Identify the R-Value and U-Value of each construction component and assembly of the building envelope as required in the applicable energy and building code(s).	Climate Zone 5: Roof: R13 + R13 Walls:R13+R5.6 C.I.	Roof: R13 + R13 Walls:R13+R5.6 C.I.
45	Emergency & Standby Power	2702.1		Identify emergency & Standby Power locations and specifications of the system to be provided.		Refer to Site Plan & electrical drawings for emergency generator
46	Smoke Control Systems	2702.2.2		Identify the Standby power for smoke control systems in accordance with Section 909.11 of NYS Building Code.		Emergency Generator

Appendix B – Architectural Program

No.	Topic	NYS Building Code Section	Other Code[1] (as Stated Above) & Section	Minimum Information Required to be Identified for this building/facility on the Building or Site Plan(s)	Required Code Value[2] /Allowed Code Value	Facility's Actual Value[3]
47	Plumbing Fixture Count	2902.1		Identify on the Building Plan(s): the minimum plumbing facilities as per applicable plumbing code(s).	2 W.C. & Lav per Gender 1 Drinking Fountain 1 Service Sink	WC:4female,2male+2urinal,1uni Lav:4female,4male,1uni 2 Drinking,1 Service Sink
48	Available Street Water Pressure			Provide the available street or well water pressure.		78 PSI
49	Fire Apparatus Access Road	FC503.1		Identify on the Site Plan: Fire Apparatus Road, Fire Lane and other Fire Service requirements per applicable Building and Fire Codes.		Refer to Site Plans.

Appendix B: Architectural Program

A SEPARATE "APPENDIX B" SHALL BE COMPLETED FOR EACH SEPARATE BUILDING AND/OR FACILITY INCLUDED IN THE ORGANIZATION'S BUSINESS PLAN

COMPANY INFORMATION

Business Name:	Citiva Medical
Facility Type:	Manufacturing Facility ☑ Dispensing Facility ☐
Use and Occupancy Classification:	Factory (F-1), Business (B), Utility (U), Storage (S-1)
Building Construction Type and Classification:	VB
Facility Address:	Process Building, Building 2 5786 State Rt. 96, Romulus, NY 14541
Primary Contact Telephone number:	Michael Caridi 1-516-852-2549
Primary Contact Fax number:	mcaridi@citivamedical.com

PART I – ARCHITECTURAL PROGRAM & CONSTRUCTION TIMELINE:

Applicant shall identify planning requirements, including but not limited to:

☐	TOWN BOARD APPROVAL
☑	PLANNING BOARD APPROVAL
☐	ZONING BOARD OF APPEALS APPROVAL
☑	PREPARATION OF CONSTRUCTION DOCUMENTS
☑	BUILDING PERMIT
☑	BIDDING PHASE
☑	CONTRACT AWARD PHASE PER EACH APPLICABLE CONTRACTOR (Identify all that apply)
☑	COMMENCEMENT OF CONSTRUCTION
☑	COMPLETION OF CONSTRUCTION

Appendix B – Architectural Program

PART II – SITE PLAN(S)

Applicant shall provide the appropriate details for each of the following by identifying the location and dimension on the Site Plan attached to the application for each building location.

- ☑ Entrance and Exits
- ☑ Public Parking Spaces
- ☑ Staff Parking Spaces
- ☑ Accessible Parking Spaces
- ☑ Accessible Route(s)
- ☑ Fire Lane and/or Fire Apparatus Road
- ☑ Percentage of Green Space
- ☑ Location of Emergency Power Systems
- ☑ Loading & Unloading
- ☑ Security Gates & Fences

PART III – ENERGY SOURCES & ENGINEERING SYSTEMS:

Applicant shall provide the following minimum information to outline the specifications relating to the energy sources and engineering systems of each building included in the application.

Gas & Electric Energy Source:
NYS Electric & Gas - NYSEG
152 Border City Road, Geneva, NY
(315-789-8779)

Energy Source:
☑ Natural Gas ☐ Oil ☑ Electric
☐ Solar ☐ Other _____

Engineering Systems:
☑ Heating System: Type Gas, Size varies Efficiency 80% et,
Ventilation Requirements NYSMC Occupancy Compliance
☑ Cooling System: Type DX, Size varies Efficiency 9.5-13 SEER
Ventilation Requirements NYSMC Occupancy Compliance
☑ Ventilation & Humidification Systems:
Type ultrasoni, Size varies, Efficiency 100%,
Ventilation Requirements NYSMC Occupancy Compliance
☑ Electrical Distribution Available Yes On-Site
☑ Water Supply: Municipal Water Service X or Private Well Water _____
☑ Sewage: Municipal Sewer System X or Private Septic System _____
☑ Emergency Power System:
Type NG, Size 1.5 Kw Efficiency 60-80%,

Water:
Seneca County Water District #1
Provides Potable & Fire Water Supply

Sewers:
Seneca County Sewer District #2

Appendix B – Architectural Program

PART IV – BUILDING CODE COMPLIANCE: (pages 3-13)

CHECK ALL APPLICABLE CODES FOR THE FACILITY

- ☑ 2010 BUILDING CODE OF NYS
- ☑ 2010 FIRE CODE OF NYS
- ☑ 2010 PLUMBING CODE OF NYS
- ☑ 2010 MECHANICAL CODE OF NYS
- ☑ 2010 FUEL GAS CODE OF NYS
- ☑ 2010 PROPERTY MAINTENANCE CODE OF NYS
- ☑ 2010 ENERGY CONSERVATION CONSTRUCTION CODE OF NYS
- ☑ 2012 IECC COMMERCIAL PROVISIONS
- ☑ 2010 EXISTING BUILDING CODE OF NYS
- ☑ NEC NATIONAL ELECTRIC CODE, (Specify Applicable Version)
- ☐ 2014 NY CITY CONSTRUCTION CODE
- ☐ 2008 NY CITY CONSTRUCTION CODE
- ☐ 1968 NY CITY CONSTRUCTION CODE
- ☑ NFPA 101-06 LIFE SAFETY CODE
- ☑ ICC/ANSI A117.1-03 ACCESSIBLE AND USABLE BUILDINGS AND FACILITIES
- ☑ OTHER Romulus town code, AHJ requirements, etc.

Appendix B – Architectural Program

Select Project Type:
Check all that apply. Refer to the Existing Building Code for definitions.

- ☑ New Building
- ☐ Repair
- ☐ Alteration Level 1
- ☐ Alteration Level 2
- ☐ Alteration Level 3
- ☐ Change of Occupancy
- ☐ Addition
- ☐ Historic Building
- ☐ Demolition
- ☐ Chapter 3. Prescriptive Compliance Method
- ☐ Chapter 13. Performance Compliance Method

Select Work Involved:
Check all that apply.

- ☑ General Construction
- ☑ Roofing
- ☐ Asbestos Abatement/Environmental
- ☑ Fire Alarm
- ☑ Structural
- ☑ Mechanical
- ☑ Plumbing
- ☑ Electrical
- ☑ Site Work
- ☑ Sprinkler
- ☐ Elevators
- ☐ Other:_____

CODE COMPLIANCE REVIEW **Please see attached for additional code information and detail.**

Applicant shall provide all applicable information in regards to the code topic and section listed below.

1. Code Compliance Review is based on the 2010 NY State Building Code for New Construction. If any other building code applies to the location or type of construction, provide applicable code and sections that most closely relates and references the code topic and information in the code sections listed below. Provide appropriate abbreviations for other applicable codes, such as: FC: ***Fire Code***, PC: ***Plumbing Code***, MC: ***Mechanical Code***, FGC: ***Fuel Gas Code***, ECCC: ***Energy Conservation Code.***
2. Provide the Required standard for each applicable code section. (i.e.: area, quantity, classification type, materials, hourly separation, etc.). If section does not apply, indicate one of the following with explanation: **NA:** *Not Applicable*, **NR:** *Not Required*, **NP:** *Not Permitted*
3. Provide your facilities "Actual" value for each required standard as per applicable code section.

No.	Topic	NYS Building Code Section	Other Code[1] (as Stated Above) & Section	Minimum Information Required to be Identified for this building/facility on the Building or Site Plan(s)	Required Code Value[2] /Allowed Code Value	Facility's Actual Value[3]
1	Use & Occupancy Classification	302.1 - 312		Use & occupancy of this facility. Identify all applicable materials, class and quantities regarding Table 307.1.	Factory (F-1), Business (B), Utility (U), Storage (S-1)	Factory (F-1), Business (B), Utility (U), Storage (S-1)

Appendix B – Architectural Program

No.	Topic	NYS Building Code Section	Other Code[1] (as Stated Above) & Section	Minimum Information Required to be Identified for this building/facility on the Building or Site Plan(s)	Required Code Value[2] /Allowed Code Value	Facility's Actual Value[2]
2	Combustible Storage	413		All combustible storage areas and rooms, as per applicable Building and Fire Codes. Identify all combustible stored materials, area and room dimensions, all required fire separations, and exit requirements.	NA	NA
3	Hazardous Materials	414		All hazardous materials stored or used as per applicable Building and Fire Codes. Identify all combustible stored materials, area and room dimensions, all required fire separations, and exit requirements.	NA	NA
4	Hazardous Materials Control Areas	414.2		Provide additional information indicating number, size, materials stored, and quantity of each material.	NA	NA
5	Building Area & Height	501-507		Provide the building area & height Provide all calculations and cite applicable code sections for increased Building Area & Heights allowed per building code(s).	Base area: F-1: 8,500; B: 9,000; U: 5,500; S-1: 9,000. Refer to attached for details.	F-1: 16,897; B: 3,700; U: 9,080; S-1: 2,361. Refer to attached for details.
6	Incidental Use Areas	508.2		Identify all Incidental Use Areas and required fire separation of occupancies on Building Plans.	Refer to attached for details.	Automatic Fire Extinguishing System

Appendix B – Architectural Program

No.	Topic	NYS Building Code Section	Other Code[1] (as Stated Above) & Section	Minimum Information Required to be Identified for this building/facility on the Building or Site Plan(s)	Required Code Value[2] /Allowed Code Value	Facility's Actual Value[3]
7	Mixed Occupancies	508.3		Provide analysis with code cited, and required fire separation of occupancies. Identify required fire separation of occupancies on Building Plan(s).	Fire areas for separated mixed occupancies. Refer to attached for details.	Refer to floor plans.
8	Nonseparated Uses	508.3.2		Provide analysis with code cited, and required fire separation of occupancies. Identify required fire separation of occupancies on Building Plan(s).	NA	NA
9	Separated Uses (Ratio < 1)	508.3.3		Provide analysis with code cited, and required fire separation of occupancies. Identify required fire separation of occupancies on Building Plan(s).	Mixed occupancy ratio <1 Refer to attached for details.	Mixed use ratio = .96 Refer to attached for details.
10	Construction Classification	602		Provide Construction Classification per each building included in Application.	VB	VB
11	Fire Resistance Rating Reqm't for Building Elements	Table 601		Provide Fire Resistance Rating per each building element as per Table 601. Identify rating & elements on Building Plans.	0 hours	0 hours

Appendix B – Architectural Program

No.	Topic	NYS Building Code Section	Other Code[1] (as Stated Above) & Section	Minimum Information Required to be Identified for this building/facility on the Building or Site Plan(s)	Required Code Value[2] /Allowed Code Value	Facility's Actual Value[3]
12	Exterior Wall Fire-Resistance Rating	Table 602		Identify required fire resistance rating of exterior walls on Building Plan(s).	0 hours	0 hours
13	Exterior Fire Separation Distance	Table 602		Identify required fire separation distance of exterior walls between Buildings on Plan.	x greater than 30 ft	30' or greater fire separation distance
14	Fire Walls	705		Provide code information and identify all applicable required Fire Wall(s) and fire resistance requirement on Building Plans.	NA	NA
15	Fire Barriers	706		Provide code information and identify all applicable required Fire Barrier(s) and fire resistance requirement on Building Plans.	Refer to attached for details.	See floor plan for location of fire barriers.
16	Shaft Enclosures	707		Provide code information and identify all applicable required Shaft Wall(s) and fire resistance requirement on Building Plans.	NA	NA
17	Fire Partitions	708		Provide code information and identify all applicable required Fire Partition(s) and fire resistance requirement on Building Plans.	NA	NA

Appendix B – Architectural Program

No.	Topic	NYS Building Code Section	Other Code[1] (as Stated Above) & Section	Minimum Information Required to be Identified for this building/facility on the Building or Site Plan(s)	Required Code Value[2] /Allowed Code Value	Facility's Actual Value[3]
18	Horizontal Assemblies	711		Provide code information and identify all applicable required Horizontal Assemblies and fire resistance requirement on Building Plans.	NA	NA
19	Fire Protection: Sprinkler System	903		Indicate Type of Sprinkler System: ☑ NFPA 13 ☐ NFPA 13 R ☐ NFPA 13D Provide code information of all applicable requirements for Automatic Sprinkler Systems with code section cited.	Installed per NFPA 13 Refer to attached for details.	To be installed per NFPA 13
20	Alt. Fire Extinguishing System	904		Provide code information of all applicable requirements for Alternative Automatic Fire-Extinguishing Systems with code section(s) cited.	NA	NA
21	Standpipe System	905		Provide code information of all applicable requirements for Standpipe Systems with code section(s) cited.	NA	NA
22	Fire Alarm & Detection Systems	907		Provide code information of all applicable requirements for Fire Alarm System(s) with code section cited. Indicate Type of Fire Alarm System ☑ Addressable ☐ Hardwired (zoned)	Conform to Section 907 Refer to attached for details.	Will conform to Section 907

Appendix B – Architectural Program

No.	Topic	NYS Building Code Section	Other Code[1] (as Stated Above) & Section	Minimum Information Required to be Identified for this building/facility on the Building or Site Plan(s)	Required Code Value[2] /Allowed Code Value	Facility's Actual Value[3]
23	Emergency Alarm System	908		Provide code information of all applicable requirements for Emergency Alarm Systems with code section cited.	Conform to Section 908 Refer to attached for details.	Will conform to Section 908
24	Fire Department Connections	912		Identify Fire Department connections in accordance with NFPA applicable standard.	Refer to attached for details.	Connection will be in accordance with NFPA
25	Exits	1001.1 &2		Identify on the Building Plans and documents, per each door, the following information: door width, door height, direction of swing, type of construction, hourly rating, and door closures.	Egress to be in accordance with Chapter 10. Refer to attached for details.	See plans. Doors in fire rated walls to be rated.
26	Occupant Load	1004 & Table 1004.1.1		Identify the use/name of each room, dimensions of each room, and Occupant Loads per each room on the Building Plans.	Refer to attached for details.	See plans. Total: 204 occ.
27	Egress Width	1005		Provide egress widths & cite applicable code section(s) and requirement(s) on the Building Plans	30.6" min., per table1005.1. See attached for details.	See plans.
28	Accessible Means of Egress	1007.1		Provide accessible means of egress as per Section 1007 & cite applicable code section(s) and requirement(s) on the Building Plans.	Refer to attached for details.	All egress routes accessible per Section 1007.

Appendix B – Architectural Program

No.	Topic	NYS Building Code Section	Other Code[1] (as Stated Above) & Section	Minimum Information Required to be Identified for this building/facility on the Building or Site Plan(s)	Required Code Value[2] /Allowed Code Value	Facility's Actual Value[3]
29	Doors, Gates, and Turnstiles	1008		Means of egress doors shall meet the requirements of this section.	Refer to attached for details.	See plans.
30	Interior Stairs	1009		Identify the following information for each stairway on the Building Plan(s): the width of stairways; the height, width, depth and number of risers and treads; dimensions of landings; stairway construction type; and handrail height.	NA	NA
31	Ramps	1010.1		Identify the following information of each ramp, on the Building Plan(s): width; total vertical rise; length of ramp; and handrail height.	NA	NA
32	Common Path of Travel	1014.3		Identify on the Building Plan(s): the length of the "Common Path of Travel" per each room as per applicable building code requirements.	Refer to attached for details	Less than 75'.
33	Exit Doorway Arrangement	1015		Identify on the Building Plan(s): applicable building code requirements for all Exits and Exit Access Doorways per each room and required exits in all buildings.	2 means of egress from occupied spaces. Refer to attached for details.	See plans for door arrangements and travel distances.
34	Corridor Fire Rating	1017.1		Identify, on the Building Plan(s): all corridors with required fire resistance and the applicable fire rating.	NA	NA

Appendix B – Architectural Program

No.	Topic	NYS Building Code Section	Other Code[1] (as Stated Above) & Section	Minimum Information Required to be Identified for this building/facility on the Building or Site Plan(s)	Required Code Value[2] /Allowed Code Value	Facility's Actual Value[3]
35	Corridor Width	1017.2		Identify on the Building Plan(s): the width of all corridors. Provide applicable code section(s) and requirement(s).	Not less than 44"	8'-0" Minimum
36	Dead End Corridor	1017.3		Corridors shall not exceed the maximum dead end corridor length as per applicable code.	Not more than 20'	19'-7" Maximum dead end
37	Number of Exits and Continuity	1019		Identify on the Building Plan(s): required number of exits, continuity and arrangement as per the applicable code requirements.	Refer to attached for details.	See plans. More than 2 exits.
38	Vertical Exit Enclosures	1020		Identify on the Building Plan(s): all applicable code requirements for each Vertical Exit Enclosure.	NA	NA
39	Exit Passageways	1021		Identify on the Building Plan(s): all applicable code requirements for each Exit Passageway.	NA	NA
40	Horizontal Exits	1022		Identify on the Building Plan(s): all applicable code requirements for each Horizontal Exit.	NA	NA

Appendix B – Architectural Program

No.	Topic	NYS Building Code Section	Other Code[1] (as Stated Above) & Section	Minimum Information Required to be Identified for this building/facility on the Building or Site Plan(s)	Required Code Value[2] /Allowed Code Value	Facility's Actual Value[3]
41	Exterior Exit Ramps & Stairways	1023		Identify on the Building Plan(s): all applicable code requirements for each exterior exit ramps and stairways.	NA	NA
42	Exit Discharge	1024		Identify on the Building Plan(s): all applicable code requirements for each Exit Discharge.	Refer to attached for details.	All exits discharge to exterior grade public way.
43	Accessibility	1101.1 - 1110 & ICC/A117. 1(03)		Identify on the Building Plan(s): all applicable code requirements such that the design and construction of each building/facility provides accessibility to physically disabled persons.	Refer to attached for details.	See plans. Building to be fully accessible.
44	Energy Conservation	2010 NYS ECCC & IECC 2012		Identify the R-Value and U-Value of each construction component and assembly of the building envelope as required in the applicable energy and building code(s).	Refer to attached for details.	Refer to attached for details.
45	Emergency & Standby Power	2702.1		Identify emergency & Standby Power locations and specifications of the system to be provided.	Conform to all applicable sections Refer to attached for details	Fully Compliant
46	Smoke Control Systems	2702.2.2		Identify the Standby power for smoke control systems in accordance with Section 909.11 of NYS Building Code.	NA	NA

Appendix B – Architectural Program

No.	Topic	NYS Building Code Section	Other Code[1] (as Stated Above) & Section	Minimum Information Required to be Identified for this building/facility on the Building or Site Plan(s)	Required Code Value[2] /Allowed Code Value	Facility's Actual Value[3]
47	Plumbing Fixture Count	2902.1		Identify on the Building Plan(s): the minimum plumbing facilities as per applicable plumbing code(s).	waterclosets: 8, lavatories:6, drinking:1, utility: 1	See plans and attached for details.
48	Available Street Water Pressure			Provide the available street or well water pressure.		78 psi
49	Fire Apparatus Access Road	FC503.1		Identify on the Site Plan: Fire Apparatus Road, Fire Lane and other Fire Service requirements per applicable Building and Fire Codes.	Compliant per FC503.1. Refer to attached for details.	Fully compliant, see site plan.

PASSERO ASSOCIATES
engineering architecture

<table>
<tr><th>No.</th><th>NYS BUILDING CODE SECTION</th><th>REQUIRED CODE VALUE / ALLOWED CODE VALUE</th><th>FACILITY'S ACTUAL VALUE</th></tr>
<tr><td>5</td><td>501-507</td><td>

TABLE 503 ALLOWABLE HEIGHT AND BUILDING AREAS

Height limitations shown as stories and feet above grade plane. Area limitations as determined by the definition of 'Area, building,' per story

<table>
<tr><th colspan="2" rowspan="3"></th><th>TYPE OF CONSTRUCTION</th></tr>
<tr><th>TYPE V</th></tr>
<tr><th>B</th></tr>
<tr><th>GROUP</th><th>HGT(feet)
HGT(S)</th><th>40</th></tr>
<tr><td>B</td><td>S
A</td><td>2
9,000</td></tr>
<tr><td>F-1</td><td>S
A</td><td>1
8,500</td></tr>
<tr><td>S-1</td><td>S
A</td><td>1
9,000</td></tr>
<tr><td>U</td><td>S
A</td><td>1
5,500</td></tr>
</table>

SECTION 506 AREA MODIFICATIONS

506.1 General. The areas limited by Table 503 shall be permitted to be increased due to frontage (I_f) and automatic sprinkler system protection (I_s) in accordance with the following:

$A_a = \{A_t + [A_t \times I_f] + [A_t \times I_s]\}$ **(Equation 5-1)**

where:
A_a = Allowable area per story (square feet).
A_t = Tabular area per story in accordance with Table 503 (square feet).
I_f = Area increase factor due to frontage as calculated in accordance with Section 506.2.
I_s = Area increase factor due to sprinkler protection as calculated in accordance with Section 506.3.

</td><td>

Frontage increase:
F = 540 ft
P = 720 ft
W = 30 ft

I_f =.5

Business:
A_t = 9,000 sf
I_f = .5
I_s = 3

A_a =40,500 sf
Actual = 3,700 sf

Factory:
A_t = 8,500 sf
I_f = .5
I_s = 3

A_a =38,250 sf
Actual = 16,900 sf

Storage:
A_t = 9,000 sf
I_f = .5
I_s = 3

A_a = 40,500 sf
Actual = 2,360 sf

Utility:
A_t = 5,500 sf
I_f = .5
I_s = 3

A_a =24,750 sf
Actual = 9,080 sf

</td></tr>
</table>

PASSERO ASSOCIATES
engineering architecture

		506.2 Frontage increase. Every building shall adjoin or have access to a public way to receive an area increase for frontage. Where a building has more than 25 percent of its perimeter on a public way or open space having a minimum width of 20 feet (6096 mm), the frontage increase shall be determined in accordance with the following: $I_f = [F/P - 0.25](W/30)$ **(Equation 5-2)** where: I_f = Area increase due to frontage. F = Building perimeter that fronts on a public way or open space having 20 feet (6096 mm) open minimum width (feet). P = Perimeter of entire building (feet). W = Width of public way or open space (feet) in accordance with Section 506.2.1. **506.2.1 Width limits.** "W" must be at least 20 feet (6096 mm). Where the value of W varies along the perimeter of the building, the calculation performed in accordance with Equation 5-2 shall be based on the weighted average of each portion of exterior wall and open space where the value of W is greater than or equal to 20 feet (6096 mm). Where W exceeds 30 feet (9144 mm), a value of 30 feet (9144 mm) shall be used in calculating the weighted average, regardless of the actual width of the open space. **506.2.2 Open space limits.** Such open space shall be either on the same lot or dedicated for public use and shall be accessed from a street or approved fire lane. **506.3 Automatic sprinkler system increase.** Where a building is equipped throughout with an approved automatic sprinkler system in accordance with Section 903.3.1.1, the area limitation in Table 503 is permitted to be increased by an additional 200 percent ($I_s = 2$) for buildings with more than one story above grade plane and an additional 300 percent ($I_s = 3$) for buildings with no more than one story above grade plane. These increases are permitted in addition to the height and story increases in accordance with Section 504.2. **506.4.1 Mixed occupancies.** In buildings with mixed occupancies, the allowable area per story (A_a) shall be based on the most restrictive provisions for each occupancy when the mixed occupancies are treated according to Section 508.3.2. When the occupancies are treated according to Section 508.3.3 as separated occupancies, the maximum total building area shall be such that the sum of the ratios for each such area on all floors as calculated according to Section 508.3.3.2 shall not exceed 2 for two-story buildings and 3 for buildings three stories or higher.	
6	508.2	**508.2 Incidental uses.** Incidental use areas shall comply with the provisions of this section.	

PASSERO ASSOCIATES
engineering architecture

<table>
<tr>
<td></td>
<td></td>
<td>
TABLE 508.2 INCIDENTAL USE AREAS
<table>
<tr><th>ROOM OR AREA</th><th>SEPARATION AND/OR PROTECTION</th></tr>
<tr><td>Refrigerant machinery rooms</td><td>1 hour or provide automatic sprinkler system</td></tr>
<tr><td>Laboratories and vocational shops, not classified as Group H, located in Group E or I-2 occupancies</td><td>1 hour or provide automatic fire-extinguishing system</td></tr>
<tr><td>Storage rooms over 100 square feet[b]</td><td>1 hour or provide automatic fire-extinguishing system</td></tr>
</table>
For SI: 1 square foot = 0.0929 m², 1 pound per square inch = 6.9 kPa, 1 British thermal unit per hour = 0.293 watts, 1 horsepower = 746 watts, 1 gallon = 3.785 L.
a. Storage areas larger than the main occupancy shall be regulated as a mixed occupancy.
</td>
<td></td>
</tr>
<tr>
<td>7</td>
<td>508.3</td>
<td>508.3 Mixed occupancies. Each portion of a building shall be individually classified in accordance with Section 302.1.

Where a building contains more than one occupancy group, the building or portion thereof shall comply with Sections 508.3.1, 508.3.2, 508.3.3 or a combination of these sections.</td>
<td></td>
</tr>
<tr>
<td>9</td>
<td>508.3.3</td>
<td>508.3.3 Separated occupancies. Buildings or portions of buildings that comply with the provisions of this section shall qualify as separated occupancies.

TABLE 508.3.3 REQUIRED SEPARATION OF OCCUPANCIES (HOURS)
<table>
<tr><th rowspan="2">OCCUPANCY</th><th colspan="2">B[b]</th><th colspan="2">F-2, S-2[c,d],U[d]</th><th colspan="2">F-1, S-1</th></tr>
<tr><th>S</th><th>NS</th><th>S</th><th>NS</th><th>S</th><th>NS</th></tr>
<tr><td>B[b]</td><td>N</td><td>N</td><td>1</td><td>2</td><td>1</td><td>2</td></tr>
<tr><td>F-2, S-2[c,d], U[d]</td><td>-</td><td>-</td><td>N</td><td>N</td><td>1</td><td>2</td></tr>
<tr><td>F-1, S-1</td><td>-</td><td>-</td><td>-</td><td>-</td><td>N</td><td>N</td></tr>
</table>
</td>
<td>1 hour separation between required areas.

Sum of ratios:

Business = .0914
Factory = .4418
Storage = .0583
Utility = .3669

Total = .9584</td>
</tr>
</table>

		For SI: 1 square foot = 0.0929 m². S = Buildings equipped throughout with an automatic sprinkler system installed in accordance with Section 903.3.1.1 NS = Buildings not equipped throughout with an automatic sprinkler system installed in accordance with Section 903.3.1.1. N = No separation requirement. NP = Not permitted. **508.3.3.1 Occupancy classification.** Separated occupancies shall be individually classified in accordance with Section 302.1. Each fire area shall comply with this code based on the occupancy classification of that portion of the building. **508.3.3.2 Allowable area.** In each story, the building area shall be such that the sum of the ratios of the actual floor area of each occupancy divided by the allowable area of each occupancy shall not exceed one. The sum of the ratios applies to every mixed use on the story even when Table 508.3.3 does not require a fire-resistance rating between the proposed uses. **508.3.3.4 Separation.** Individual occupancies shall be separated from adjacent occupancies in accordance with Table 508.3.3 **508.3.3.4.1 Construction.** Required separations shall be fire barriers constructed in accordance with Section 706 or horizontal assemblies constructed in accordance with Section 711, or both, so as to completely separate adjacent occupancies.	
15	706	**706.3 Fire-resistance rating.** The fire-resistance rating of fire barriers shall comply with this section. **706.3.6 Incidental use areas.** The fire barrier separating incidental use areas shall have a fire-resistance rating of not less than that indicated in Table 508.2. **706.3.8 Separation of mixed occupancies.** Where the provisions of Section 508.3.3 are applicable, the fire barrier separating mixed occupancies shall have a fire-resistance rating of not less than that indicated in Section 508.3.3 based on the occupancies being separated. **706.3.9 Fire areas.** The fire barrier or horizontal assembly, or both, separating a single occupancy into different fire areas shall have a fire-resistance rating of not less than that indicated in Table 706.3.9. The fire barriers or horizontal assemblies, or both, separating fire areas of mixed occupancies shall have a fire-resistance rating of not less than the highest value indicated in Table 706.3.9 for the occupancies under consideration.	

PASSERO ASSOCIATES
engineering architecture

TABLE 706.3.9 FIRE-RESISTANCE RATING REQUIREMENTS FOR FIRE BARRIER ASSEMBLIES BETWEEN FIRE AREAS

OCCUPANCY GROUP	FIRE-RESISTANCE RATING (hours)
F-1, H-3, S-1	3
A, B, E, F-2, H-4, H-5, I, M, R, S-2	2
U	1

706.5 Continuity. Fire barriers shall extend from the top of the floor/ceiling assembly below to the underside of the floor or roof slab or deck above and shall be securely attached thereto. Such fire barriers shall be continuous through concealed spaces, such as the space above a suspended ceiling. The supporting construction for fire barrier walls shall be protected to afford the required fire-resistance rating of the fire barrier supported, except for 1-hour fire-resistance-rated incidental use area separations as required by Table 508.2 in buildings of Type IIB, IIIB and VB construction. Hollow vertical spaces within a fire barrier shall be fireblocked in accordance with Section 717.2 at every floor level.

706.7 Openings. Openings in a fire barrier wall shall be protected in accordance with Section 715. Openings shall be limited to a maximum aggregate width of 25 percent of the length of the wall, and the maximum area of any single opening shall not exceed 156 square feet (15 m^2). Openings in exit enclosures and exit passageways shall also comply with Sections 1020.1.1 and 1021.4, respectively.

Exceptions:

1. Openings shall not be limited to 156 square feet (15 m^2) where adjoining fire areas are equipped throughout with an automatic sprinkler system in accordance with Section 903.3.1.1.
2. Fire doors serving an exit enclosure.
3. Openings shall not be limited to 156 square feet (15 m^2) or an aggregate width of 25 percent of the length of the wall where the opening protective assembly has been tested in accordance with ASTM E 119 and has a minimum fire-resistance rating not less than the fire-resistance rating of the wall.
4. Fire windows permitted in atrium separation walls shall not be limited to a maximum aggregate width of 25 percent of length of the wall.

706.8 Penetrations. Penetrations of fire barriers shall comply with Section 712.

706.8.1 Prohibited penetrations. Penetrations into an exit enclosure or an exit passageway shall be allowed only when permitted by Section 1020.1.2 or 1021.5, respectively.

706.9 Joints. Joints made in or between fire barriers shall comply with Section 713.

706.10 Ducts and air transfer openings. Penetrations in a fire barrier by ducts and air transfer openings shall comply with Section 716.

PASSERO ASSOCIATES
engineering architecture

<table>
<tr>
<td>19</td>
<td>903</td>
<td>
903.1 General. Automatic sprinkler systems shall comply with this section. [F]

903.2 Where required. Approved automatic sprinkler systems in new buildings and structures shall be provided in the locations described in this section. [F]

903.2.3 Group F-1. An automatic sprinkler system shall be provided throughout all buildings containing a Group F-1 occupancy where one of the following conditions exists: [F]

1. Where a Group F-1 fire area exceeds 12,000 square feet (1115 m²);

TABLE 903.2.13 ADDITIONAL REQUIRED SUPPRESSION SYSTEMS [F]

<table>
<tr><th>SECTION</th><th>SUBJECT</th></tr>
<tr><td>417.4</td><td>Drying rooms</td></tr>
<tr><td>508.2</td><td>Incidental use areas</td></tr>
<tr><td>IFC</td><td>Sprinkler system requirements as set forth in Section 903.2.13 of the Fire Code of New York State</td></tr>
</table>

903.3 Installation requirements. Automatic sprinkler systems shall be designed and installed in accordance with Sections 903.3.1 through 903.3.7. [F]

903.3.1 Standards. Sprinkler systems shall be designed and installed in accordance with Sections 903.3.1.1, 903.3.1.2 or 903.3.1.3.
903.3.1.1 NFPA 13 sprinkler systems. Where the provisions of this code require that a building or portion thereof be equipped throughout with an automatic sprinkler system in accordance with this section, sprinklers shall be installed throughout in accordance with NFPA 13 except as provided in Section 903.3.1.1.1. [F]
903.3.3 Obstructed locations. Automatic sprinklers shall be installed with due regard to obstructions that will delay activation or obstruct the water distribution pattern. Automatic sprinklers shall be installed in or under covered kiosks, displays, booths, concession stands, or equipment that exceeds 4 feet (1219 mm) in width. Not less than a 3-foot (914 mm) clearance shall be maintained between automatic sprinklers and the top of piles of combustible fibers. [F]

903.3.4 Actuation. Automatic sprinkler systems shall be automatically actuated unless specifically provided for in this code. [F]
903.3.5 Water supplies. Water supplies for automatic sprinkler systems shall comply with this section and the standards referenced in Section 903.3.1. The potable water supply shall be protected against backflow in accordance with the requirements of this section and the Plumbing Code of New York State. [F]
</td>
<td></td>
</tr>
</table>

PASSERO ASSOCIATES
engineering architecture

		903.3.6 Hose threads. Fire hose threads and fittings used in connection with automatic sprinkler systems shall be as prescribed by the code enforcement official. **903.3.7 Fire department connections.** The location of fire department connections shall be approved by the code enforcement official. **903.4 Sprinkler system monitoring and alarms.** All valves controlling the water supply for automatic sprinkler systems, pumps, tanks, water levels and temperatures, critical air pressures and water-flow switches on all sprinkler systems shall be electrically supervised. **[F]** **903.4.1 Signals.** Alarm, supervisory and trouble signals shall be distinctly different and shall be automatically transmitted to an approved central station, remote supervising station or proprietary supervising station as defined in NFPA 72 or, when approved by the code enforcement official, shall sound an audible signal at a constantly attended location. **903.4.2 Alarms.** Approved audible devices shall be connected to every automatic sprinkler system. Such sprinkler water-flow alarm devices shall be activated by water flow equivalent to the flow of a single sprinkler of the smallest orifice size installed in the system. Alarm devices shall be provided on the exterior of the building in an approved location. Where a fire alarm system is installed, actuation of the automatic sprinkler system shall actuate the building fire alarm system. **[F]** **903.4.3 Floor control valves.** Approved supervised indicating control valves shall be provided at the point of connection to the riser on each floor in high-rise buildings. **[F]** **903.5 Testing and maintenance.** Sprinkler systems shall be tested and maintained in accordance with the *Fire Code of New York State*. **[F]**	
22	907	**907.1 General.** This section covers the application, installation, performance and maintenance of fire alarm systems and their components. **[F]** **907.1.1 Construction documents.** Construction documents for fire alarm systems shall be submitted for review and approval prior to system installation. Construction documents shall include, but not be limited to, all of the following: **[F]** 1. A floor plan which indicates the use of all rooms. 2. Locations of alarm-initiating and notification appliances. 3. Alarm control and trouble signaling equipment. 4. Annunciation. 5. Power connection. 6. Battery calculations. 7. Conductor type and sizes. 8. Voltage drop calculations. 9. Manufacturers, model numbers and listing information for equipment, devices and materials. 10. Details of ceiling height and construction. 11. The interface of fire safety control functions. **907.1.2 Equipment.** Systems and their components shall be listed and approved for the purpose for which they are installed. **[F]** **907.2 Where required-new buildings and structures.** An approved manual fire alarm system, automatic fire detection system or automatic heat detection system installed in accordance with the provisions of this code and NFPA 72 shall be provided in new buildings and structures in accordance with Sections 907.2.1 through 907.2.23 and provide occupant notification in accordance with Section 907.9, unless other requirements are provided by another section of this code. Where automatic sprinkler protection	

		installed in accordance with Section 903.3.1.1 or 903.3.1.2 is provided and connected to the building fire alarm system, automatic heat detection required by this section shall not be required. The automatic fire detectors shall be smoke detectors. Where ambient conditions prohibit installation of automatic smoke detection, other automatic fire detection shall be allowed. **907.2.1.2 Emergency power.** Emergency voice/alarm communications systems shall be provided with an approved emergency power source. **[F]** **907.2.2 Group B.** A manual fire alarm system shall be installed in Group B occupancies having an occupant load of 500 or more persons or more than 100 persons above or below the lowest level of exit discharge. **[F]** **907.2.2.1 Fire detection.** Areas of Group B buildings that are not protected by an automatic sprinkler system and that have an occupant load of more than 100 persons shall be provided with automatic fire detection or automatic heat detection installed in accordance with NFPA 72. **907.2.4 Group F.** A manual fire alarm system shall be installed in Group F occupancies that have an occupant load of 100 or more. **907.2.7.1 Occupant notification.** During times that the building is occupied, the initiation of a signal from a manual fire alarm box or from a water flow switch shall not be required to activate the alarm notification appliances when an alarm signal is activated at a constantly attended location from which evacuation instructions shall be initiated over an emergency voice/alarm communication system installed in accordance with Section 907.2.12.2. The emergency voice/alarm communication system shall be allowed to be used for other announcements provided the manual fire alarm use takes precedence over any other use. **907.2.7.2 Fire detection.** Areas of Group M buildings that are not protected by an automatic sprinkler system and that have an occupant load of more than 100 persons shall be provided with automatic smoke detection or automatic heat detection installed in accordance with NFPA 72. **907.2.9.1.2 Exits and corridors.** Automatic fire detection shall be required in corridors and exits. **907.2.10 Single- and multiple-station smoke alarms.** Listed single- and multiple-station smoke alarms complying with UL 217 shall be installed in accordance with the provisions of this code and the household fire-warning equipment provisions of NFPA 72. **[F]** **907.2.10.1 Where required.** Single- or multiple-station smoke alarms shall be installed in the locations described in Sections 907.2.10.1.1 through 907.2.10.1.3. **[F]** **907.2.10.2 Power source.** In new construction, required smoke alarms shall receive their primary power from the building wiring where such wiring is served from a commercial source and shall be equipped with a battery backup. Smoke alarms shall emit a signal when the batteries are low. Wiring shall be permanent and without a disconnecting switch other than as required for overcurrent protection. **[F]** **907.2.10.4 Acceptance testing.** When the installation of the alarm devices is complete, each detector and interconnecting wiring for multiple-station alarm devices shall be tested in accordance with the household fire warning equipment provisions of NFPA 72. **[F]**	

		907.2.15 Delayed egress locks. Where delayed egress locks are installed on means of egress doors in accordance with Section 1008.1.8.6, an automatic smoke or heat detection system shall be installed as required by that section. **[F]** **907.3 Manual fire alarm boxes.** Manual fire alarm boxes shall be installed in accordance with Sections 907.3.1 through 907.3.5. **[F]** **907.3.1 Location.** Manual fire alarm boxes shall be located not more than 5 feet (1524 mm) from the entrance to each exit. Additional manual fire alarm boxes shall be located so that travel distance to the nearest box does not exceed 200 feet (60 960 mm). **[F]** **Exception:** In buildings protected by an automatic sprinkler system in accordance with 903.3.1.1 or 903.3.1.2, the travel distance to the nearest box shall not apply. **907.3.2 Height.** The height of the manual fire alarm boxes shall be a minimum of 42 inches (1067 mm) and a maximum of 48 inches (1219 mm), measured vertically, from the floor level to the activating handle or lever of the box. **[F]** **907.3.3 Color.** Manual fire alarm boxes shall be red in color. **[F]** **907.3.4 Signs.** Where fire alarm systems are not monitored by a supervising station, an approved permanent sign shall be installed adjacent to each manual fire alarm box that reads: WHEN ALARM SOUNDS-CALL FIRE DEPARTMENT. **[F]** **Exception:** Where the manufacturer has permanently provided this information on the manual fire alarm box. **907.3.5 Protective covers.** The code enforcement official is authorized to require the installation of listed manual fire alarm box protective covers to prevent malicious false alarms or to provide the manual fire alarm box with protection from physical damage. The protective cover shall be transparent or red in color with a transparent face to permit visibility of the manual fire alarm box. Each cover shall include proper operating instructions. A protective cover that emits a local alarm signal shall not be installed unless approved. **[F]** **907.4 Power supply.** The primary and secondary power supply for the fire alarm system shall be provided in accordance with NFPA 72. **907.5 Wiring.** Wiring shall comply with the requirements of NFPA 70 and NFPA 72. Wireless protection systems utilizing radio-frequency transmitting devices shall comply with the special requirements for supervision of low-power wireless systems in NFPA 72. **[F]** **907.6 Activation.** Where an alarm notification system is required by another section of this code, it shall be activated by: **[F]** 1. A required automatic fire alarm system. 2. Sprinkler water-flow devices. 3. Required manual fire alarm boxes. **907.8 Zones.** Each floor shall be zoned separately and a zone shall not exceed 22,500 square feet (2090 m²). The length of any zone shall not exceed 300 feet (91 440 mm) in any direction. **[F]** **Exception:** Automatic sprinkler system zones shall not exceed the area permitted by NFPA 13.	

PASSERO ASSOCIATES
engineering architecture

907.8.1 Zoning indicator panel. A zoning indicator panel and the associated controls shall be provided in an approved location. The visual zone indication shall lock in until the system is reset and shall not be canceled by the operation of an audible alarm-silencing switch. **[F]**

907.9 Alarm notification appliances. Alarm notification appliances shall be provided and shall be listed for their purpose. **[F]**

907.9.1 Visible alarms. Visible alarm notification appliances shall be provided in accordance with Sections 907.9.1.1 through 907.9.1.4. **[F]**

Exceptions:
1. Visible alarm notification appliances are not required in alterations, except where an existing fire alarm system is upgraded or replaced, or a new fire alarm system is installed.
2. Visible alarm notification appliances shall not be required in exits as defined in Section 1002.1.

907.9.1.1 Public and common areas. Visible alarm notification appliances shall be provided in public areas and common areas. **[F]**

907.9.1.2 Employee work areas. Where employee work areas have audible alarm coverage, the notification appliance circuits serving the employee work areas shall be initially designed with a minimum of 20 percent spare capacity to account for the potential of adding visible notification appliances in the future to accommodate hearing impaired employees. **[F]**

907.9.2 Audible alarms. Audible alarm notification appliances shall be provided and shall sound a distinctive sound that is not to be used for any purpose other than that of a fire alarm. The audible alarm notification appliances shall provide a sound pressure level of 15 decibels (dBA) above the average ambient sound level or 5 dBA above the maximum sound level having a duration of at least 60 seconds, whichever is greater, in every occupied space within the building. The minimum sound pressure levels shall be: 70 dBA in occupancies in Groups R and I-1; 90 dBA in mechanical equipment rooms and 60 dBA in other occupancies. The maximum sound pressure level for audible alarm notification appliances shall be 120 dBA at the minimum hearing distance from the audible appliance. Where the average ambient noise is greater than 105 dBA, visible alarm notification appliances shall be provided in accordance with NFPA 72 and audible alarm notification appliances shall not be required. **[F]**

907.10 Fire safety functions. Automatic fire detectors utilized for the purpose of performing fire safety functions shall be connected to the building's fire alarm control panel where a fire alarm system is required by Section 907.2. Detectors shall, upon actuation, perform the intended function and activate the alarm notification appliances or a visible and audible supervisory signal at a constantly attended location. In buildings not required to be equipped with a fire alarm system, the automatic fire detector shall be powered by normal electrical service and, upon actuation, perform the intended function. The detectors shall be located in accordance with NFPA 72. **[F]**

907.11 Duct smoke detectors. Duct smoke detectors shall be connected to the building's fire alarm control panel when a fire alarm system is provided. Activation of a duct smoke detector shall initiate a visible and audible supervisory signal at a constantly attended location. Duct smoke detectors shall not be used as a substitute for required open-area detection. **[F]**

Exceptions:

		1. The supervisory signal at a constantly attended location is not required where duct smoke detectors activate the building's alarm notification appliances. 2. In occupancies not required to be equipped with a fire alarm system, actuation of a smoke detector shall activate a visible and audible signal in an approved location. Smoke detector trouble conditions shall activate a visible or audible signal in an approved location and shall be identified as air duct detector trouble. **907.12 Access.** Access shall be provided to each detector for periodic inspection, maintenance and testing. **[F]** **907.13 Fire-extinguishing systems.** Automatic fire-extinguishing systems shall be connected to the building fire alarm system where a fire alarm system is required by another section of this code or is otherwise installed. **[F]** **907.14 Monitoring.** Fire alarm systems required by this chapter or the *Fire Code of New York State* shall be monitored by an approved supervising station in accordance with NFPA 72. **[F]** **Exception:** Supervisory service is not required for: 1. Single- and multiple-station smoke alarms required by Section 907.2.10. 2. Smoke detectors in Group I-3 occupancies. 3. Automatic sprinkler systems in one- and two-family dwellings. **907.15 Automatic telephone-dialing devices.** Automatic telephone-dialing devices used to transmit an emergency alarm shall not be connected to any fire department telephone number unless approved by the fire chief. **[F]** **907.16 Acceptance tests.** Upon completion of the installation of the fire alarm system, alarm notification appliances and circuits, alarm-initiating devices and circuits, supervisory-signal initiating devices and circuits, signaling line circuits, and primary and secondary power supplies shall be tested in accordance with NFPA 72. **[F]** **907.17 Record of completion.** A record of completion in accordance with NFPA 72 verifying that the system has been installed in accordance with the approved plans and specifications shall be provided. **[F]** **907.18 Instructions.** Operating, testing and maintenance instructions, and record drawings ("as builts") and equipment specifications shall be provided at an approved location. **[F]** **907.19 Inspection, testing and maintenance.** The maintenance and testing schedules and procedures for fire alarm and fire detection systems shall be in accordance with the *Fire Code of New York State.* **[F]**	
23	908	**908.3 Highly toxic and toxic materials.** A gas detection system shall be provided to detect the presence of gas at or below the permissible exposure limit (PEL) or ceiling limit of the gas for which detection is provided. The system shall be capable of monitoring the discharge from the treatment system at or below one-half the immediately dangerous to life and health (IDLH) limit. **[F]** **Exception:** A gas-detection system is not required for toxic gases when the physiological warning threshold level for the gas is at a level below the accepted PEL for the gas. **908.3.1 Alarms.** The gas detection system shall initiate a local alarm and transmit a signal to a constantly attended control	

		station when a short-term hazard condition is detected. The alarm shall be both visible and audible and shall provide warning both inside and outside the area where gas is detected. The audible alarm shall be distinct from all other alarms. **[F]** **Exception:** Signal transmission to a constantly attended control station is not required when not more than one cylinder of highly toxic or toxic gas is stored. **908.3.2 Shutoff of gas supply.** The gas detection system shall automatically close the shutoff valve at the source on gas supply piping and tubing related to the system being monitored for whichever gas is detected. **[F]** **Exception:** Automatic shutdown is not required for reactors utilized for the production of highly toxic or toxic compressed gases where such reactors are: 1. Operated at pressures less than 15 pounds per square inch gauge (psig) (103.4 kPa). 2. Constantly attended. 3. Provided with readily accessible emergency shutoff valves. **908.3.3 Valve closure.** The automatic closure of shutoff valves shall be in accordance with the following: **[F]** 1. When the gas-detection sampling point initiating the gas detection system alarm is within a gas cabinet or exhausted enclosure, the shutoff valve in the gas cabinet or exhausted enclosure for the specific gas detected shall automatically close. 2. Where the gas-detection sampling point initiating the gas detection system alarm is within a gas room and compressed gas containers are not in gas cabinets or exhausted enclosures, the shutoff valves on all gas lines for the specific gas detected shall automatically close. 3. Where the gas-detection sampling point initiating the gas detection system alarm is within a piping distribution manifold enclosure, the shutoff valve for the compressed container of specific gas detected supplying the manifold shall automatically close. **Exception:** When the gas-detection sampling point initiating the gas-detection system alarm is at a use location or within a gas valve enclosure of a branch line downstream of a piping distribution manifold, the shutoff valve in the gas valve enclosure for the branch line located in the piping distribution manifold enclosure shall automatically close. **908.4 Ozone gas-generator rooms.** Ozone gas-generator rooms shall be equipped with a continuous gas-detection system that will shut off the generator and sound a local alarm when concentrations above the PEL occur. **[F]** **908.5 Repair garages.** A flammable-gas detection system shall be provided in repair garages for vehicles fueled by nonodorized gases in accordance with Section 406.6.6. **[F]** **908.6 Refrigerant detector.** Machinery rooms shall contain a refrigerant detector with an audible and visual alarm. The detector, or a sampling tube that draws air to the detector, shall be located in an area where refrigerant from a leak will concentrate. The alarm shall be actuated at a value not greater than the corresponding TLV-TWA values for the refrigerant classification indicated in the *Mechanical Code of New York State*. Detectors and alarms shall be placed in approved locations. **[F]**	
24	912	**912.1 Installation.** Fire department connections shall be installed in accordance with the NFPA standard applicable to the system design and shall comply with Sections 912.2 through 912.5. **[F]** **912.2 Location.** With respect to hydrants, driveways, buildings and landscaping, fire department connections shall be so located	

PASSERO ASSOCIATES
engineering architecture

<table>
<tr><td></td><td></td><td>that fire apparatus and hose connected to supply the system will not obstruct access to the buildings for other fire apparatus. The location of fire department connections shall be approved. [F]

912.2.1 Visible location. Fire department connections shall be located on the street side of buildings, fully visible and recognizable from the street or nearest point of fire department vehicle access or as otherwise approved by the code enforcement official. [F]
912.2.2 Existing buildings. On existing buildings, wherever the fire department connection is not visible to approaching fire apparatus, the fire department connection shall be indicated by an approved sign mounted on the street front or on the side of the building. Such sign shall have the letters "FDC" at least 6 inches (152 mm) high and words in letters at least 2 inches (51 mm) high or an arrow to indicate the location. All such signs shall be subject to the approval of the code enforcement official. [F]
912.3 Access. Immediate access to fire department connections shall be maintained at all times and without obstruction by fences, bushes, trees, walls or any other object for a minimum of 3 feet (914 mm). [F]

912.3.1 Locking fire department connection caps. The code enforcement official is authorized to require locking caps on fire department connections for water-based fire protection systems where the responding fire department carries appropriate key wrenches for removal. [F]
912.4 Signs. A metal sign with raised letters at least 1 inch (25 mm) in size shall be mounted on all fire department connections serving automatic sprinklers, standpipes or fire pump connections. Such signs shall read: AUTOMATIC SPRINKLERS, STANDPIPES or TEST CONNECTION, or a combination thereof as applicable. [F]

912.5 Backflow protection. The potable water supply to automatic sprinkler and standpipe systems shall be protected against backflow as required by the Plumbing Code of New York State. [P]</td><td></td></tr>
<tr><td>25</td><td>1001.1 & 2</td><td>1001.1 General. Buildings or portions thereof shall be provided with a means of egress system as required by this chapter. The provisions of this chapter shall control the design, construction and arrangement of means of egress components required to provide an approved means of egress from structures and portions thereof.

1001.2 Minimum requirements. It shall be unlawful to alter a building or structure in a manner that will reduce the number of exits or the capacity of the means of egress to less than required by this code.</td><td></td></tr>
<tr><td>26</td><td>1004 & Table 1004.1.1</td><td>TABLE 1004.1.1 MAXIMUM FLOOR AREA ALLOWANCES PER OCCUPANT

<table>
<tr><th>FUNCTION OF SPACE</th><th>FLOOR AREA IN SQ. FT. PER OCCUPANT</th></tr>
<tr><td>Accessory storage areas, mechanical equipment room</td><td>300 gross</td></tr>
<tr><td>Agricultural building</td><td>300 gross</td></tr>
<tr><td>Assembly without fixed seats
Concentrated (chairs only—not fixed)
Standing space
Unconcentrated (tables and chairs)</td><td>
7 net
5 net
15 net</td></tr>
<tr><td>Business areas</td><td>100 gross</td></tr>
<tr><td>Kitchens, commercial</td><td>200 gross</td></tr>
</table>
</td><td></td></tr>
</table>

PASSERO ASSOCIATES
engineering architecture

		Locker rooms: 50 gross Mercantile Areas on other floors: 60 gross Basement and grade floor areas: 30 gross Storage, stock, shipping areas: 300 gross Warehouses: 500 gross For SI: 1 square foot = 0.0929 m². **1004.2 Increased occupant load.** The occupant load permitted in any building, or portion thereof, is permitted to be increased from that number established for the occupancies in Table 1004.1.1, provided that all other requirements of the code are also met based on such modified number and the occupant load does not exceed one occupant per 7 square feet (0.65 m²) of occupiable floor space. Where required by the code enforcement official, an approved aisle, seating or fixed equipment diagram substantiating any increase in occupant load shall be submitted. Where required by the code enforcement official, such diagram shall be posted. **1004.3 Posting of occupant load.** Every room or space that is an assembly occupancy shall have the occupant load of the room or space posted in a conspicuous place, near the main exit or exit access doorway from the room or space. Posted signs shall be of an approved legible permanent design and shall be maintained by the owner or authorized agent. **1004.9 Multiple occupancies.** Where a building contains two or more occupancies, the means of egress requirements shall apply to each portion of the building based on the occupancy of that space. Where two or more occupancies utilize portions of the same means of egress system, those egress components shall meet the more stringent requirements of all occupancies that are served.	
27	1005	**TABLE 1005.1 EGRESS WIDTH PER OCCUPANT SERVED** OCCUPANCY: Occupancies other than those listed below WITHOUT SPRINKLER SYSTEM: Stairways (inches per occupant): 0.3; Other egress components (inches per occupant): 0.2 WITH SPRINKLER SYSTEM[a]: Stairways (inches per occupant): 0.2; Other egress components (inches per occupant): 0.15 For SI: 1 inch = 25.4 mm. NA = Not applicable. a. Buildings equipped throughout with an automatic sprinkler system in accordance with Section 903.3.1.1 or 903.3.1.2. **1005.2 Door encroachment.** Doors opening into the path of egress travel shall not reduce the required width to less than one-half during the course of the swing. When fully open, the door shall not project more than 7 inches (178 mm) into the required width.	

PASSERO ASSOCIATES
engineering architecture

28	1007.1	**1007.1 Accessible means of egress required.** Accessible means of egress shall comply with this section. Accessible spaces shall be provided with not less than one accessible means of egress. Where more than one means of egress is required by Section 1015.1 or 1019.1 from any accessible space, each accessible portion of the space shall be served by not less than two accessible means of egress.	
29	1008	**1008.1 Doors.** Means of egress doors shall meet the requirements of this section. Doors serving a means of egress system shall meet the requirements of this section and Section 1018.2. Doors provided for egress purposes in numbers greater than required by this code shall meet the requirements of this section. Means of egress doors shall be readily distinguishable from the adjacent construction and finishes such that the doors are easily recognizable as doors. Mirrors or similar reflecting materials shall not be used on means of egress doors. Means of egress doors shall not be concealed by curtains, drapes, decorations or similar materials. **1008.1.1 Size of doors.** The minimum width of each door opening shall be sufficient for the occupant load thereof and shall provide a clear width of not less than 32 inches (813 mm). Clear openings of doorways with swinging doors shall be measured between the face of the door and the stop, with the door open 90 degrees (1.57 rad). Where this section requires a minimum clear width of 32 inches (813 mm) and a door opening includes two door leaves without a mullion, one leaf shall provide a clear opening width of 32 inches (813 mm). The maximum width of a swinging door leaf shall be 48 inches (1219 mm) nominal. Means of egress doors in a Group I-2 occupancy used for the movement of beds shall provide a clear width not less than 41.5 inches (1054 mm). The height of doors shall not be less than 80 inches (2032 mm). **1008.1.1.1 Projections into clear width.** There shall not be projections into the required clear width lower than 34 inches (864 mm) above the floor or ground. Projections into the clear opening width between 34 inches (864 mm) and 80 inches (2032 mm) above the floor or ground shall not exceed 4 inches (102 mm). **1008.1.2 Door swing.** Egress doors shall be side-hinged swinging. Doors shall swing in the direction of egress travel where serving an occupant load of 50 or more persons or a Group H occupancy. The opening force for interior side-swinging doors without closers shall not exceed a 5-pound (22 N) force. For other side-swinging, sliding and folding doors, the door latch shall release when subjected to a 15-pound (67 N) force. The door shall be set in motion when subjected to a 30-pound (133 N) force. The door shall swing to a full-open position when subjected to a 15-pound (67 N) force. Forces shall be applied to the latch side. **1008.1.3 Special doors.** Special doors and security grilles shall comply with the requirements of Sections 1008.1.3.1 through 1008.1.3.5. **1008.1.3.4 Access-controlled egress doors.** The entrance doors in a means of egress in buildings with an occupancy in Group A, B, E, M, R-1 or R-2 and entrance doors to tenant spaces in occupancies in Groups A, B, E, M, R-1 and R-2 are permitted to be equipped with an approved entrance and egress access control system which shall be installed in accordance with all of the following criteria: 1. A sensor shall be provided on the egress side arranged to detect an occupant approaching the doors. The doors shall be arranged to unlock by a signal from or loss of power to the sensor.	

		2. Loss of power to that part of the access control system which locks the doors shall automatically unlock the doors. 3. The doors shall be arranged to unlock from a manual unlocking device located 40 inches to 48 inches (1016 mm to 1219 mm) vertically above the floor and within 5 feet (1524 mm) of the secured doors. Ready access shall be provided to the manual unlocking device and the device shall be clearly identified by a sign that reads "PUSH TO EXIT." When operated, the manual unlocking device shall result in direct interruption of power to the lock-independent of the access control system electronics-and the doors shall remain unlocked for a minimum of 30 seconds. 4. Activation of the building fire alarm system, if provided, shall automatically unlock the doors, and the doors shall remain unlocked until the fire alarm system has been reset. 5. Activation of the building automatic sprinkler or fire detection system, if provided, shall automatically unlock the doors. The doors shall remain unlocked until the fire alarm system has been reset. 6. Entrance doors in buildings with an occupancy in Group A, B, E or M shall not be secured from the egress side during periods that the building is open to the general public. **1008.1.3.5 Security grilles.** In Groups B, F, M and S, horizontal sliding or vertical security grilles are permitted at the main exit and shall be openable from the inside without the use of a key or special knowledge or effort during periods that the space is occupied. The grilles shall remain secured in the full-open position during the period of occupancy by the general public. Where two or more means of egress are required, not more than one-half of the exits or exit access doorways shall be equipped with horizontal sliding or vertical security grilles. **1008.1.4 Floor elevation.** There shall be a floor or landing on each side of a door. Such floor or landing shall be at the same elevation on each side of the door. Landings shall be level except for exterior landings, which are permitted to have a slope not to exceed 0.25 unit vertical in 12 units horizontal (2-percent slope). **1008.1.6 Thresholds.** Thresholds at doorways shall not exceed 0.75 inch (19.1 mm) in height for sliding doors serving dwelling units or 0.5 inch (12.7 mm) for other doors. Raised thresholds and floor level changes greater than 0.25 inch (6.4 mm) at doorways shall be beveled with a slope not greater than one unit vertical in two units horizontal (50-percent slope). **1008.1.7 Door arrangement.** Space between two doors in a series shall be 48 inches (1219 mm) minimum plus the width of a door swinging into the space. Doors in a series shall swing either in the same direction or away from the space between the doors. **1008.1.8 Door operations.** Except as specifically permitted by this section egress doors shall be readily openable from the egress side without the use of a key or special knowledge or effort. **1008.1.8.1 Hardware.** Door handles, pulls, latches, locks and other operating devices on doors required to be accessible by Chapter 11 shall not require tight grasping, tight pinching or twisting of the wrist to operate. **1008.1.8.2 Hardware height.** Door handles, pulls, latches, locks and other operating devices shall be installed 34 inches (864 mm) minimum and 48 inches (1219 mm) maximum above the finished floor. Locks used only for security purposes and not used for normal operation are permitted at any height. **1008.1.8.3 Locks and latches.** Locks and latches shall be permitted to prevent operation of doors where any of the following exists: 1. Places of detention or restraint. 2. In buildings in occupancy Group A having an occupant load of 300 or less, Groups B, F, M and S, and in places of religious worship, the main exterior door or doors are permitted to be equipped with key-operated locking devices from the egress side provided: 2.1. The locking device is readily distinguishable as locked, 2.2. A readily visible durable sign is posted on the egress side on or adjacent to the door stating: THIS DOOR TO	

PASSERO ASSOCIATES
engineering architecture

			REMAIN UNLOCKED WHEN BUILDING IS OCCUPIED. The sign shall be in letters 1 inch (25 mm) high on a contrasting background, 2.3. The use of the key-operated locking device is revokable by the code enforcement official for due cause. 3. Where egress doors are used in pairs, approved automatic flush bolts shall be permitted to be used, provided that the door leaf having the automatic flush bolts has no doorknob or surface-mounted hardware. 4. Doors from individual dwelling or sleeping units of Group R occupancies having an occupant load of 10 or less are permitted to be equipped with a night latch, dead bolt or security chain, provided such devices are openable from the inside without the use of a key or tool. **1008.1.8.4 Bolt locks.** Manually operated flush bolts or surface bolts are not permitted. **Exceptions:** 1. On doors not required for egress in individual dwelling units or sleeping units. 2. Where a pair of doors serves a storage or equipment room, manually operated edge- or surface-mounted bolts are permitted on the inactive leaf. **1008.1.8.5 Unlatching.** The unlatching of any door or leaf shall not require more than one operation. **Exceptions:** 1. Places of detention or restraint. 2. Where manually operated bolt locks are permitted by Section 1008.1.8.4. 3. Doors with automatic flush bolts as permitted by Section 1008.1.8.3, Exception 3. 4. Doors from individual dwelling units and sleeping units of Group R occupancies as permitted by Section 1008.1.8.3, Exception 4. **1008.1.8.6 Delayed egress locks.** Approved, listed, delayed egress locks shall be permitted to be installed on doors serving any occupancy except Group A, E and H occupancies in buildings that are equipped throughout with an automatic sprinkler system in accordance with Section 903.3.1.1 or an approved automatic smoke or heat detection system installed in accordance with Section 907, provided that the doors unlock in accordance with Items 1 through 6 below. A building occupant shall not be required to pass through more than one door equipped with a delayed egress lock before entering an exit. 1. The doors unlock upon actuation of the automatic sprinkler system or automatic fire detection system. 2. The doors unlock upon loss of power controlling the lock or lock mechanism. 3. The door locks shall have the capability of being unlocked by a signal from the fire command center. 4. The initiation of an irreversible process which will release the latch in not more than 15 seconds when a force of not more than 15 pounds (67 N) is applied for 1 second to the release device. Initiation of the irreversible process shall activate an audible signal in the vicinity of the door. Once the door lock has been released by the application of force to the releasing device, relocking shall be by manual means only. **Exception:** Where approved, a delay of not more than 30 seconds is permitted. 5. A sign shall be provided on the door located above and within 12 inches (305 mm) of the release device reading: PUSH UNTIL ALARM SOUNDS. DOOR CAN BE OPENED IN 15 [30] SECONDS. 6. Emergency lighting shall be provided at the door. **1008.1.8.7 Stairway doors.** Interior stairway means of egress doors shall be openable from both sides without the use of a key or special knowledge or effort.	

PASSERO ASSOCIATES
engineering architecture

		Exceptions: 1. Stairway discharge doors shall be openable from the egress side and shall only be locked from the opposite side. 2. This section shall not apply to doors arranged in accordance with Section 403.12. 3. In stairways serving not more than four stories, doors are permitted to be locked from the side opposite the egress side, provided they are openable from the egress side and capable of being unlocked simultaneously without unlatching upon a signal from the fire command center, if present, or a signal by emergency personnel from a single location inside the main entrance to the building. **1008.1.9 Panic and fire exit hardware.** Where panic and fire exit hardware is installed, it shall comply with the following: 1. The actuating portion of the releasing device shall extend at least one-half of the door leaf width. 2. The maximum unlatching force shall not exceed 15 pounds (67 N). Electrical rooms with equipment rated 1,200 amperes or more and over 6 feet (1829 mm) wide that contain overcurrent devices, switching devices or control devices with exit access doors must be equipped with panic hardware and doors must swing in the direction of egress. If balanced doors are used and panic hardware is required, the panic hardware shall be the push-pad type and the pad shall not extend more then one-half the width of the door measured from the latch side.	
32	1014.3	**1014.3 Common path of egress travel.** In occupancies other than Groups H-1, H-2 and H-3, the common path of egress travel shall not exceed 75 feet (22 860 mm). **Exceptions:** 1. The length of a common path of egress travel in Group B, F and S occupancies shall not be more than 100 feet (30 480 mm), provided that the building is equipped throughout with an automatic sprinkler system installed in accordance with Section 903.3.1.1. 2. Where a tenant space in Group B, S and U occupancies has an occupant load of not more than 30, the length of a common path of egress travel shall not be more than 100 feet (30 480 mm).	
33	1015	**1015.1 Exit or exit access doorways required.** Two exits or exit access doorways from any space shall be provided where one of the following conditions exists: 1. The occupant load of the space exceeds the values in Table 1015.1. 2. The common path of egress travel exceeds the limitations of Section 1014.3. 3. Where required by Sections 1015.3, 1015.4 and 1015.5. **TABLE 1015.1 SPACES WITH ONE MEANS OF EGRESS** OCCUPANCY | MAXIMUM OCCUPANT LOAD A, B,E[a], F, M, U | 49 S | 29	

PASSERO ASSOCIATES
engineering architecture

		1015.1.1 Three or more exits. Access to three or more exits shall be provided from a floor area where required by Section 1019.1. **1015.2 Exit or exit access doorway arrangement.** Required exits shall be located in a manner that makes their availability obvious. Exits shall be unobstructed at all times. Exit and exit access doorways shall be arranged in accordance with Sections 1015.2.1 and 1015.2.2. **1015.2.1 Two exits or exit access doorways.** Where two exits or exit access doorways are required from any portion of the exit access, the exit doors or exit access doorways shall be placed a distance apart equal to not less than one-half of the length of the maximum overall diagonal dimension of the building or area to be served measured in a straight line between exit doors or exit access doorways. Interlocking or scissor stairs shall be counted as one exit stairway. **Exceptions:** 1. Where exit enclosures are provided as a portion of the required exit and are interconnected by a 1-hour fire-resistance-rated corridor conforming to the requirements of Section 1017, the required exit separation shall be measured along the shortest direct line of travel within the corridor. 2. Where a building is equipped throughout with an automatic sprinkler system in accordance with Section 903.3.1.1 or 903.3.1.2, the separation distance of the exit doors or exit access doorways shall not be less than one-third of the length of the maximum overall diagonal dimension of the area served. **1015.2.2 Three or more exits or exit access doorways.** Where access to three or more exits is required, at least two exit doors or exit access doorways shall be arranged in accordance with the provisions of Section 1015.2.1. **1015.5 Refrigerated rooms or spaces.** Rooms or spaces having a floor area of 1,000 square feet (93 m^2) or more, containing a refrigerant evaporator and maintained at a temperature below 68°F (20°C), shall have access to not less than two exits or exit access doors. Travel distance shall be determined as specified in Section 1016.1, but all portions of a refrigerated room or space shall be within 150 feet (45 720 mm) of an exit or exit access door where such rooms are not protected by an approved automatic sprinkler system. Egress is allowed through adjoining refrigerated rooms or spaces. **Exception:** Where using refrigerants in quantities limited to the amounts based on the volume set forth in the *Mechanical Code of New York State.*	
37	1019	**1019.1 Minimum number of exits.** All rooms and spaces within each story shall be provided with and have access to the minimum number of approved independent exits required by Table 1019.1 based on the occupant load of the story, except as modified in Section 1015.1 or 1019.2. For the purposes of this chapter, occupied roofs shall be provided with exits as required for stories. The required number of exits from any story, basement or individual space shall be maintained until arrival at grade or the public way.	

PASSERO ASSOCIATES
engineering architecture

<table>
<tr>
<td></td>
<td></td>
<td>
TABLE 1019.1 MINIMUM NUMBER OF EXITS FOR OCCUPANT LOAD
<table>
<tr><th>OCCUPANT LOAD (persons per story)</th><th>MINIMUM NUMBER OF EXITS (per story)</th></tr>
<tr><td>1-500</td><td>2</td></tr>
<tr><td>501-1,000</td><td>3</td></tr>
<tr><td>More than 1,000</td><td>4</td></tr>
</table>
1019.3 Exit continuity. Exits shall be continuous from the point of entry into the exit to the exit discharge.

1019.4 Exit door arrangement. Exit door arrangement shall meet the requirements of Sections 1015.2 through 1015.2.2.
</td>
<td></td>
</tr>
<tr>
<td>42</td>
<td>1024</td>
<td>
1024.1 General. Exits shall discharge directly to the exterior of the building. The exit discharge shall be at grade or shall provide direct access to grade. The exit discharge shall not reenter a building.

Exceptions:

1. A maximum of 50 percent of the number and capacity of the exit enclosures is permitted to egress through areas on the level of discharge provided all of the following are met:
1.1. Such exit enclosures egress to a free and unobstructed way to the exterior of the building, which way is readily visible and identifiable from the point of termination of the exit enclosure.
1.2. The entire area of the level of discharge is separated from areas below by construction conforming to the fire-resistance rating for the exit enclosure.
1.3. The egress path from the exit enclosure on the level of discharge is protected throughout by an approved automatic sprinkler system. All portions of the level of discharge with access to the egress path shall either be protected throughout with an automatic sprinkler system installed in accordance with Section 903.3.1.1 or 903.3.1.2, or separated from the egress path in accordance with the requirements for the enclosure of exits.
2. A maximum of 50 percent of the number and capacity of the exit enclosures is permitted to egress through a vestibule provided all of the following are met:
2.1. The entire area of the vestibule is separated from areas below by construction conforming to the fire-resistance rating for the exit enclosure.
2.2. The depth from the exterior of the building is not greater than 10 feet (3048 mm) and the length is not greater than 30 feet (9144 mm).
2.3. The area is separated from the remainder of the level of exit discharge by construction providing protection at least the equivalent of approved wired glass in steel frames.
2.4. The area is used only for means of egress and exits directly to the outside.
3. Stairways in open parking garages complying with Section 1020.1, Exception 5, are permitted to egress through the open parking garage at the level of exit discharge.
1024.2 Exit discharge capacity. The capacity of the exit discharge shall be not less than the required discharge capacity of the exits being served.

1024.3 Exit discharge location. Exterior balconies, stairways and ramps shall be located at least 10 feet (3048 mm) from adjacent lot lines and from other buildings on the same lot unless the adjacent building exterior walls and openings are protected in
</td>
<td></td>
</tr>
</table>

PASSERO ASSOCIATES
engineering architecture

		accordance with Section 704 based on fire separation distance. **1024.4 Exit discharge components.** Exit discharge components shall be sufficiently open to the exterior so as to minimize the accumulation of smoke and toxic gases. **1024.6 Access to a public way.** The exit discharge shall provide a direct and unobstructed access to a public way. **Exception:** Where access to a public way cannot be provided, a safe dispersal area shall be provided where all of the following are met: 1. The area shall be of a size to accommodate at least 5 square feet (0.28 m^2) for each person. 2. The area shall be located on the same property, away from the building requiring egress a minimum distance equal to at least 150 percent of the height of the building but no less than 50 feet (15 240 mm). 3. The area shall be permanently maintained and identified as a safe dispersal area. 4. The area shall be provided with a safe and unobstructed path of travel from the building. 5. The area shall be provided with a two-way voice communication system connecting the safe dispersal area to the main entrance. If a fire command center is provided, voice communication shall connect the safe dispersal area with both the main entrance and fire command center.	
43	1101.1-1110 & ICC/A117.1(03)	**1103.1 Where required.** Sites, buildings, structures, facilities, elements and spaces, temporary or permanent, shall be accessible to persons with physical disabilities. **1103.2 General exceptions.** Sites, buildings, structures, facilities, elements and spaces shall be exempt from this chapter to the extent specified in this section. **1103.2.1 Specific requirements.** Accessibility is not required in buildings and facilities, or portions thereof, to the extent permitted by Sections 1104 through 1110. **1103.2.2 Existing buildings.** Existing buildings shall comply with the *Existing Building Code of New York State.* **1103.2.3 Employee work areas.** Spaces and elements within employee work areas shall only be required to comply with Sections 907.9.1.2, 1007 and 1104.3.1 and shall be designed and constructed so that individuals with disabilities can approach, enter and exit the work area. Work areas, or portions of work areas, that are less than 150 square feet (14 m^2) in area and elevated 7 inches (178 mm) or more above the ground or finish floor where the elevation is essential to the function of the space shall be exempt from all requirements. **1103.2.5 Utility buildings.** Occupancies in Group U are exempt from the requirements of this chapter other than the following: 1. In agricultural buildings, access is required to paved work areas and areas open to the general public. 2. Private garages or carports that contain required accessible parking. **1103.2.6 Construction sites.** Structures, sites and equipment directly associated with the actual processes of construction including, but not limited to, scaffolding, bridging, materials hoists, materials storage or construction trailers are not required to be accessible.	

PASSERO ASSOCIATES
engineering architecture

		1103.2.7 Raised areas. Raised areas used primarily for purposes of security, life safety or fire safety including, but not limited to, observation galleries, prison guard towers, fire towers or lifeguard stands are not required to be accessible or to be served by an accessible route. **1103.2.8 Limited access spaces.** Nonoccupiable spaces accessed only by ladders, catwalks, crawl spaces, freight elevators or very narrow passageways are not required to be accessible. **1103.2.9 Equipment spaces.** Spaces frequented only by personnel for maintenance, repair or monitoring of equipment are not required to be accessible. Such spaces include, but are not limited to, elevator pits, elevator penthouses, mechanical, electrical or communications equipment rooms, piping or equipment catwalks, water or sewage treatment pump rooms and stations, electric substations and transformer vaults, and highway and tunnel utility facilities. **1103.2.10 Single-occupant structures.** Single-occupant structures accessed only by passageways below grade or elevated above grade including, but not limited to, toll booths that are accessed only by underground tunnels, are not required to be accessible. **1103.2.15 Walk-in coolers and freezers.** Walk-in coolers and freezers intended for employee use only are not required to be accessible. **SECTION 1104 ACCESSIBLE ROUTE** **1104.1 Site arrival points.** Accessible routes within the site shall be provided from public transportation stops; accessible parking; accessible passenger loading zones; and public streets or sidewalks to the accessible building entrance served. **Exception:** Other than in buildings or facilities containing or serving Type B units, an accessible route shall not be required between site arrival points and the building or facility entrance if the only means of access between them is a vehicular way not providing for pedestrian access. **1104.2 Within a site.** At least one accessible route shall connect accessible buildings, accessible facilities, accessible elements and accessible spaces that are on the same site. **Exception:** An accessible route is not required between accessible buildings, accessible facilities, accessible elements and accessible spaces that have, as the only means of access between them, a vehicular way not providing for pedestrian access. **1104.3 Connected spaces.** When a building or portion of a building is required to be accessible, an accessible route shall be provided to each portion of the building, to accessible building entrances connecting accessible pedestrian walkways and the public way. **Exception:** In assembly areas with fixed seating required to be accessible, an accessible route shall not be required to serve fixed seating where wheelchair spaces or designated aisle seats required to be on an accessible route are not provided. **1104.3.1 Employee work areas.** Common use circulation paths within employee work areas shall be accessible routes. **Exceptions:** 1. Common use circulation paths, located within employee work areas that are less than 300 square feet (27.9 m²) in size and defined by permanently installed partitions, counters, casework or furnishings, shall not be required to be accessible	

PASSERO ASSOCIATES
engineering architecture

routes.
2. Common use circulation paths, located within employee work areas, that are an integral component of equipment, shall not be required to be accessible routes.
3. Common use circulation paths, located within exterior employee work areas that are fully exposed to the weather, shall not be required to be accessible routes.

1104.5 Location. Accessible routes shall coincide with or be located in the same area as a general circulation path. Where the circulation path is interior, the accessible route shall also be interior. Where only one accessible route is provided, the accessible route shall not pass through kitchens, storage rooms, restrooms, closets or similar spaces.

1104.6 Security barriers. Security barriers including, but not limited to, security bollards and security check points shall not obstruct a required accessible route or accessible means of egress.

Exception: Where security barriers incorporate elements that cannot comply with these requirements, such as certain metal detectors, fluoroscopes or other similar devices, the accessible route shall be permitted to be provided adjacent to security screening devices. The accessible route shall permit persons with disabilities passing around security barriers to maintain visual contact with their personal items to the same extent provided others passing through the security barrier.

SECTION 1105 ACCESSIBLE ENTRANCES

1105.1 Public entrances. In addition to accessible entrances required by Sections 1105.1.1 through 1105.1.6, at least 60 percent of all public entrances shall be accessible.

Exceptions:

1. An accessible entrance is not required to areas not required to be accessible.
2. Loading and service entrances that are not the only entrance to a tenant space.

1105.1.3 Restricted entrances. Where restricted entrances are provided to a building or facility, at least one restricted entrance to the building or facility shall be accessible.
1105.1.5 Service entrances. If a service entrance is the only entrance to a building or a tenant space in a facility, that entrance shall be accessible.

SECTION 1106 PARKING AND PASSENGER LOADING FACILITIES

1106.1 Required. Where parking is provided, accessible parking spaces shall be provided in compliance with Table 1106.1, except as required by Sections 1106.2 through 1106.4. Where more than one parking facility is provided on a site, the number of parking spaces required to be accessible shall be calculated separately for each parking facility.

Exception: This section does not apply to parking spaces used exclusively for buses, trucks, other delivery vehicles, law

PASSERO ASSOCIATES
engineering architecture

enforcement vehicles or vehicular impound and motor pools where lots accessed by the public are provided with an accessible passenger loading zone.

TABLE 1106.1 ACCESSIBLE PARKING SPACES

TOTAL PARKING SPACES PROVIDED	REQUIRED MINIMUM NUMBER OF ACCESSIBLE SPACES
1 to 25	1
26 to 50	2
51 to 75	3
76 to 100	4
101 to 150	5
151 to 200	6
201 to 300	7
301 to 400	8
401 to 500	9
501 to 1,000	2% of total
1,001 and over	20, plus one for each 100, or fraction thereof, over 1,000

1106.1.1 Access aisles. Accessible parking spaces shall be in conformance with ICC/ANSI A117.1 except that spaces shall be provided with access aisles at least 8 feet (2440 mm) in width.

1106.5 Signage. Each accessible parking space shall be provided with signage displaying the international symbol of accessibility. Each access aisle shall be provided with signage reading "NO PARKING ANYTIME". Signs shall be permanently installed at a clear height of between 60 inches (1525 mm) and 84 inches (2185 mm) above grade and shall not interfere with an accessible route from an access aisle.

1106.6 Location. Accessible parking spaces shall be located on the shortest accessible route of travel from adjacent parking to an accessible building entrance. In parking facilities that do not serve a particular building, accessible parking spaces shall be located on the shortest route to an accessible pedestrian entrance to the parking facility. Where buildings have multiple accessible entrances with adjacent parking, accessible parking spaces shall be dispersed and located near the accessible entrances.

Exceptions:

1. In multilevel parking structures, for every eight or fraction of eight accessible spaces, at least one shall be in a location having a minimum vertical clearance of 98 inches (2490 mm) maintained along the vehicular route connecting the space with a designated entrance and exit. Such spaces are permitted on one level.
2. Accessible parking spaces shall be permitted to be located in different parking facilities if substantially equivalent or greater accessibility is provided in terms of distance from an accessible entrance or entrances, parking fee and user convenience.

PASSERO ASSOCIATES
engineering architecture

		SECTION 1109 OTHER FEATURES AND FACILITIES **1109.1 General.** Accessible building features and facilities shall be provided in accordance with Sections 1109.2 through 1109.14. **1109.2 Toilet and bathing facilities.** Toilet rooms and bathing facilities shall be accessible. Where a floor level is not required to be connected by an accessible route, the only toilet rooms or bathing facilities provided within the facility shall not be located on the inaccessible floor. At least one of each type of fixture, element, control or dispenser in each accessible toilet room and bathing facility shall be accessible. **Exceptions:** 1. In toilet rooms or bathing facilities accessed only through a private office, not for common or public use and intended for use by a single occupant, any of the following alternatives are allowed: 1.1. Doors are permitted to swing into the clear floor space, provided the door swing can be reversed to meet the requirements in ICC/ANSI A117.1; 1.2 The height requirements for the water closet in ICC/ANSI A117.1 are not applicable; 1.3. Grab bars are not required to be installed in a toilet room, provided that reinforcement has been installed in the walls and located so as to permit the installation of such grab bars; and 1.4. The requirement for height, knee and toe clearance shall not apply to a lavatory. 2. This section is not applicable to toilet and bathing facilities that serve dwelling units or sleeping units that are not required to be accessible by Section 1107. 3. Where multiple single-user toilet rooms or bathing facilities are clustered at a single location, at least 50 percent but not less than one room for each use at each cluster shall be accessible. 4. Where no more than one urinal is provided in a toilet room or bathing facility, the urinal is not required to be accessible. 5. Toilet rooms that are part of critical care or intensive care patient sleeping rooms are not required to be accessible. **1109.2.1 Unisex toilet and bathing rooms.** In assembly and mercantile occupancies, an accessible unisex toilet room shall be provided where an aggregate of six or more male and female water closets is required. In buildings of mixed occupancy, only those water closets required for the assembly or mercantile occupancy shall be used to determine the unisex toilet room requirement. In recreational facilities where separate-sex bathing rooms are provided, an accessible unisex bathing room shall be provided. Fixtures located within unisex toilet and bathing rooms shall be included in determining the number of fixtures provided in an occupancy. **1109.2.1.1 Standard.** Unisex toilet and bathing rooms shall comply with Sections 1109.2.1.2 through 1109.2.1.7 and ICC/ANSI A117.1. **1109.2.1.2 Unisex toilet rooms.** Unisex toilet rooms shall include only one water closet and only one lavatory. A unisex bathing room in accordance with Section 1109.2.1.3 shall be considered a unisex toilet room. **Exception:** A urinal is permitted to be provided in addition to the water closet in a unisex toilet room. **1109.2.1.4 Location.** Unisex toilet and bathing rooms shall be located on an accessible route. Unisex toilet rooms shall be located not more than one story above or below separate-sex toilet rooms. The accessible route from any separate-sex toilet room to a unisex toilet room shall not exceed 500 feet (152 m).	

		1109.2.1.6 Clear floor space. Where doors swing into a unisex toilet or bathing room, a clear floor space not less than 30 inches by 48 inches (762 mm by 1219 mm) shall be provided, within the room, beyond the area of the door swing. **1109.2.1.7 Privacy.** Doors to unisex toilet and bathing rooms shall be securable from within the room. **1109.2.2 Water closet compartment.** Where water closet compartments are provided in a toilet room or bathing facility, at least one wheelchair-accessible compartment shall be provided. Where the combined total water closet compartments and urinals provided in a toilet room or bathing facility is six or more, at least one ambulatory-accessible water closet compartment shall be provided in addition to the wheelchair-accessible compartment. Wheelchair-accessible and ambulatory-accessible compartments shall comply with ICC/ANSI A117.1. **1109.3 Sinks.** Where sinks are provided, at least 5 percent but not less than one provided in accessible spaces shall comply with ICC/ANSI A117.1. **Exception:** Mop or service sinks are not required to be accessible. **1109.4 Kitchens and kitchenettes.** Where kitchens and kitchenettes are provided in accessible spaces or rooms, they shall be accessible in accordance with ICC/ANSI A117.1. **1109.5 Drinking fountains.** Where drinking fountains are provided on an exterior site, on a floor or within a secured area, the drinking fountains shall be provided in accordance with Sections 1109.5.1 and 1109.5.2. **1109.5.1 Minimum number.** No fewer than two drinking fountains shall be provided. One drinking fountain shall comply with the requirements for people who use a wheelchair and one drinking fountain shall comply with the requirements for standing persons. **Exception:** A single drinking fountain that complies with the requirements for people who use a wheelchair and standing persons shall be permitted to be substituted for two separate drinking fountains. **1109.5.2 More than the minimum number.** Where more than the minimum number of drinking fountains specified in Section 1109.5.1 are provided, 50 percent of the total number of drinking fountains provided shall comply with the requirements for persons who use a wheelchair and 50 percent of the total number of drinking fountains provided shall comply with the requirements for standing persons. **Exception:** Where 50 percent of the drinking fountains yields a fraction, 50 percent shall be permitted to be rounded up or down, provided that the total number of drinking fountains complying with this section equals 100 percent of the drinking fountains. **1109.8 Storage.** Where fixed or built-in storage elements such as cabinets, shelves, medicine cabinets, closets and drawers are provided in required accessible spaces, at least one of each type shall contain storage space complying with ICC/ANSI A117.1. **1109.8.1 Lockers.** Where lockers are provided in accessible spaces, at least five percent, but not less than one, of each type shall be accessible. **1109.8.2 Shelving and display units.** Self-service shelves and display units shall be located on an accessible route. Such shelving and display units shall not be required to comply with reach-range provisions.	

PASSERO ASSOCIATES
engineering architecture

1109.8.3 Coat hooks and shelves. Where coat hooks and shelves are provided in toilet rooms or toilet compartments or in dressing, fitting or locker rooms, at least one of each type shall be accessible and shall be provided in accessible toilet rooms without toilet compartments, accessible toilet compartments and accessible dressing, fitting and locker rooms.

1109.12 Service facilities. Service facilities shall provide for accessible features in accordance with Sections 1109.12.1 through 1109.12.5.

1109.12.1 Dressing, fitting and locker rooms. Where dressing rooms, fitting rooms or locker rooms are provided, at least 5 percent, but not less than one, of each type of use in each cluster provided shall be accessible.

1109.13 Controls, operating mechanisms and hardware. Controls, operating mechanisms and hardware intended for operation by the occupant, including switches that control lighting and ventilation and electrical convenience outlets, in accessible spaces, along accessible routes or as parts of accessible elements shall be accessible.

Exceptions:

1. Operable parts that are intended for use only by service or maintenance personnel shall not be required to be accessible.
2. Electrical or communication receptacles serving a dedicated use shall not be required to be accessible.
3. Where two or more outlets are provided in a kitchen above a length of counter top that is uninterrupted by a sink or appliance, one outlet shall not be required to be accessible.
4. Floor electrical receptacles shall not be required to be accessible.
5. HVAC diffusers shall not be required to be accessible.
6. Except for light switches, where redundant controls are provided for a single element, one control in each space shall not be required to be accessible.
7. Access doors or gates in barrier walls and fences protecting pools, spas and hot tubs shall be permitted to have operable parts of the release of latch on self-latching devices at 54 inches (1370 mm) maximum and 48 inches minimum above the finished floor or ground, provided the self-latching devices are not also self-locking devices, operated by means of a key, electronic opener, or integral combination lock.

1109.13.1 Operable window. Where operable windows are provided in rooms that are required to be accessible in accordance with Sections 1107.5.1.1, 1107.5.2.1, 1107.5.3.1, 1107.5.4, 1107.6.1.1, 1107.6.2.2.1 and 1107.6.4.1, at least one window in each room shall be accessible and each required operable window shall be accessible.

Exception: Accessible windows are not required in bathrooms or kitchens.

SECTION 1110 SIGNAGE

1110.1 Signs. Required accessible elements shall be identified by the International Symbol of Accessibility at the following locations:

1. Accessible parking spaces required by Section 1106.1 except where the total number of parking spaces provided is four

PASSERO ASSOCIATES
engineering architecture

		or less. 2. Accessible passenger loading zones. 3. Accessible areas of refuge required by Section 1007.6. 4. Accessible rooms where multiple single-user toilet or bathing rooms are clustered at a single location. 5. Accessible entrances where not all entrances are accessible. 6. Accessible check-out aisles where not all aisles are accessible. The sign, where provided, shall be above the check-out aisle in the same location as the check-out aisle number or type of check-out identification. 7. Unisex toilet and bathing rooms. 8. Accessible dressing, fitting and locker rooms where not all such rooms are accessible. **1110.2 Directional signage.** Directional signage indicating the route to the nearest like accessible element shall be provided at the following locations. These directional signs shall include the International Symbol of Accessibility: 1. Inaccessible building entrances. 2. Inaccessible public toilets and bathing facilities. 3. Elevators not serving an accessible route. 4. At each separate-sex toilet and bathing room indicating the location of the nearest unisex toilet or bathing room where provided in accordance with Section 1109.2.1. 5. At exits and elevators serving a required accessible space, but not providing an approved accessible means of egress, signage shall be provided in accordance with Section 1007.7. **1110.3 Other signs.** Signage indicating special accessibility provisions shall be provided as shown: 1. Each assembly area required to comply with Section 1108.2.6 shall provide a sign notifying patrons of the availability of assistive listening systems. **Exception:** Where ticket offices or windows are provided, signs are not required at each assembly area provided that signs are displayed at each ticket office or window informing patrons of the availability of assistive listening systems. 2. At each door to an egress stairway, exit passageway and exit discharge, signage shall be provided in accordance with Section 1011.3. 3. At areas of refuge, signage shall be provided in accordance with Sections 1007.6.3 through 1007.6.5. 4. At areas for assisted rescue, signage shall be provided in accordance with Section 1007.8.3. **ICC/A117.1** **301 General** **301.1 Scope.** The provisions of Chapter 3 shall apply where required by the scoping provisions adopted by the administrative authority or by Chapters 4 through 10. **302 Floor Surfaces** **302.1 General.** Floor surfaces shall be stable, firm, and slip resistant, and shall comply with Section 302. Changes in level in floor surfaces shall comply with Section 303. **302.2 Carpet.** Carpet or carpet tile shall be securely attached and shall have a firm cushion, pad, or backing or no cushion or pad.	

Carpet or carpet tile shall have a level loop, textured loop, level cut pile, or level cut/uncut pile texture. The pile shall be 1/2 inch (13 mm) maximum in height. Exposed edges of carpet shall be fastened to the floor and shall have trim along the entire length of the exposed edge. Carpet edge trim shall comply with Section 303.

Fig. 302.2 Carpet on Floor Surfaces

302.3 Openings. Openings in floor surfaces shall be of a size that does not permit the passage of a 1/2 inch (13 mm) diameter sphere, except as allowed in Sections 407.4.3, 408.4.3, 409.4.3, 410.4, and 805.10. Elongated openings shall be placed so that the long dimension is perpendicular to the dominant direction of travel.

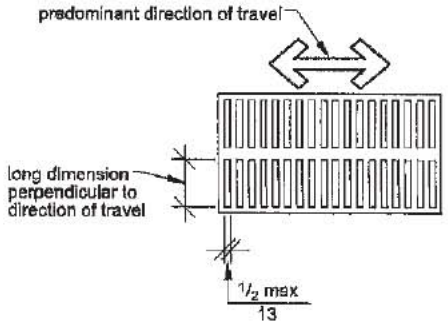

Fig. 302.3 Openings in Floor Surfaces

303 Changes in Level

303.1 General. Changes in level in floor surfaces shall comply with Section 303.

303.2 Vertical. Changes in level of 1/4 inch (6.4 mm) maximum in height shall be permitted to be vertical.

PASSERO ASSOCIATES
engineering architecture

Fig. 303.2 Carpet on Floor Surfaces

303.3 Beveled. Changes in level greater than 1/4 inch (6.4 mm) in height and not more than 1/2 inch (13 mm) maximum in height shall be beveled with a slope not steeper than 1:2.

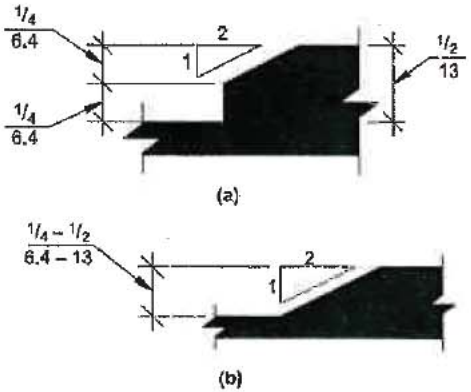

Fig. 303.3 Beveled Changes in Level

303.4 Ramped. Changes in level greater that 1/2 inch (13 mm) in height shall be ramped and shall comply with Section 405 or 406.

304 Turning Space
304.1 General. A turning space shall comply with Section 304.
304.2 Floor Surface. Floor surfaces of a turning space shall have a slope not steeper than 1:48 and shall comply with Section 302.
304.3 Size. Turning spaces shall comply with Section 304.3.1 or 304.3.2.

PASSERO ASSOCIATES
engineering architecture

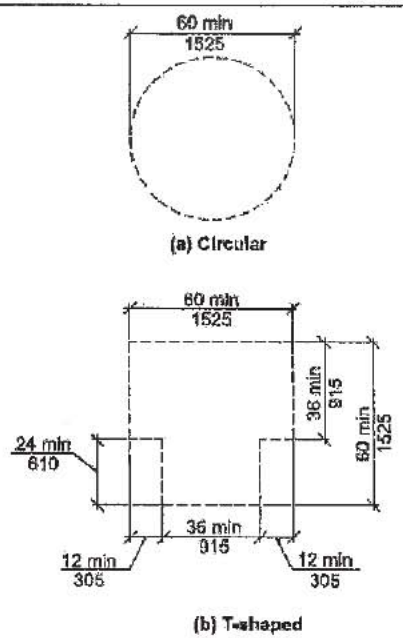

Fig. 304.3 Size of Turning Space

304.3.1 Circular Space. The turning space shall be a circular space with a 60-inch (1525 mm) minimum diameter. The turning space shall be permitted to include knee and toe clearance complying with Section 306.

304.3.2 T-Shaped Space. The turning space shall be a T-shaped space within a 60-inch (1525 mm) minimum square, with arms and base 36 inches (915 mm) minimum in width. Each arm of the T shall be clear of obstructions 12 inches (305 mm) minimum in each direction, and the base shall be clear of obstructions 24 inches (610 mm) minimum. The turning space shall be permitted to include knee and toe clearance complying with Section 306 only at the end of either the base or one arm.

304.4 Door Swing. Unless otherwise specified, doors shall be permitted to swing into turning spaces.

305 Clear Floor Space

305.1 General. A clear floor space shall comply with Section 305.

305.2 Floor Surfaces. Floor surfaces of a clear floor space shall have a slope not steeper than 1:48 and shall comply with Section 302.

305.3 Size. The clear floor space shall be 48 inches (1220 mm) minimum in length and 30 inches (760 mm) minimum in width.

PASSERO ASSOCIATES
engineering architecture

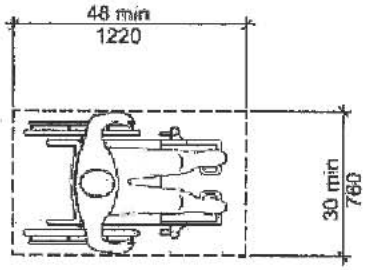

Fig. 305.3 Size of Clear Floor Space

305.4 Knee and Toe Clearance. Unless otherwise specified, clear floor space shall be permitted to include knee and toe clearance complying with Section 306.

305.5 Position. Unless otherwise specified, the clear floor space shall be positioned for either forward or parallel approach to an element.

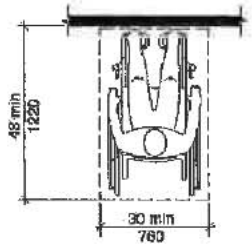

(a) Forward

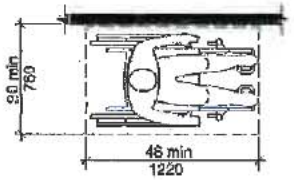

(b) Parallel

PASSERO ASSOCIATES
engineering architecture

Fig. 305.5 Position of Clear Floor Space

305.6 Approach. One full, unobstructed side of the clear floor space shall adjoin or overlap an accessible route or adjoin another clear floor space.

305.7 Alcoves. If a clear floor space is in an alcove or otherwise confined on all or part of three sides, additional maneuvering clearances complying with Sections 305.7.1 and 305.7.2 shall be provided, as applicable.

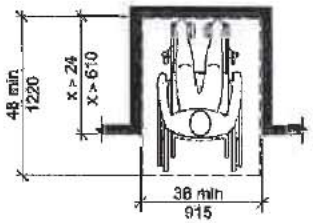

(a) Forward Approach

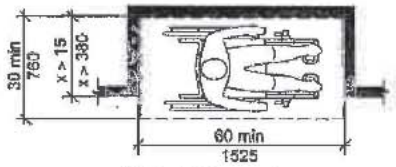

(b) Parallel Approach

Fig. 305.7 Maneuvering Clearance in an Alcove

305.7.1 Parallel Approach. Where the clear floor space is positioned for a parallel approach, the alcove shall be 60 inches (1525 mm) minimum in width where the depth exceeds 15 inches (380 mm).

305.7.2 Forward Approach. Where the clear floor space is positioned for a forward approach, the alcove shall be 36 inches (915 mm) minimum in width where the depth exceeds 24 inches (610 mm).

306 Knee and Toe Clearance

306.1 General. Where space beneath an element is included as part of clear floor space at an element, clearance at an element, or a turning space, the space shall comply with Section 306. Additional space beyond knee and toe clearance shall be permitted beneath

PASSERO ASSOCIATES
engineering architecture

elements.

306.2 Toe Clearance.

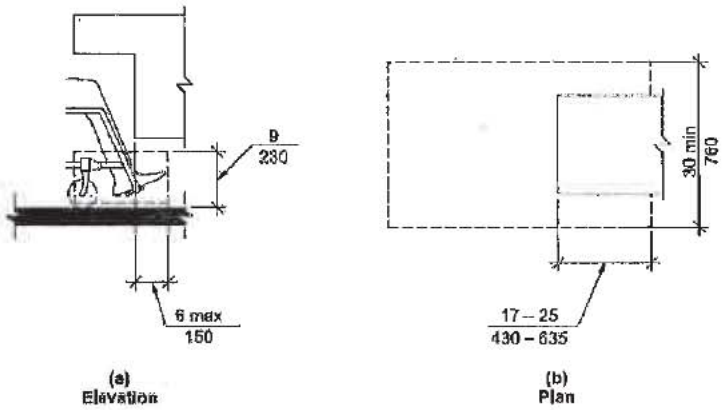

Fig. 306.2 Toe Clearance

306.2.1 General. Space beneath an element between the floor and 9 inches (230 mm) above the floor shall be considered toe clearance and shall comply with Section 306.2.

306.2.2 Maximum Depth. Toe clearance shall be permitted to extend 25 inches (635 mm) maximum under an element.

306.2.3 Minimum Depth. Where toe clearance is required at an element as part of a clear floor space, the toe clearance shall extend 17 inches (430 mm) minimum beneath the element.

306.2.4 Additional Clearance. Space extending greater than 6 inches (150 mm) beyond the available knee clearance at 9 inches (230 mm) above the floor shall not be considered toe clearance.

306.2.5 Width. Toe clearance shall be 30 inches (760 mm) minimum in width.

306.3 Knee Clearance.

PASSERO ASSOCIATES
engineering architecture

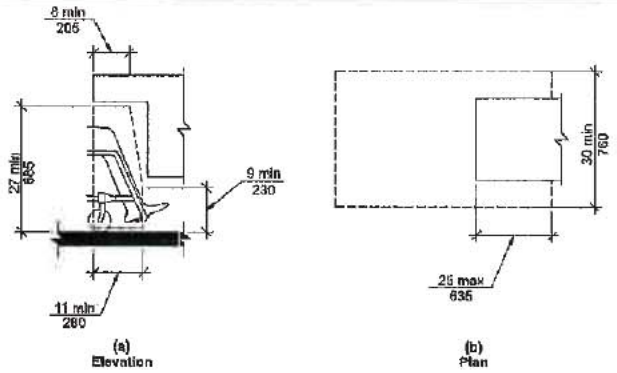

Fig. 306.3 Knee Clearance

306.3.1 General. Space beneath an element between 9 inches (230 mm) and 27 inches (685 mm) above the floor shall be considered knee clearance and shall comply with Section 306.3.
306.3.2 Maximum Depth. Knee clearance shall be permitted to extend 25 inches (635 mm) maximum under an element at 9 inches (230 mm) above the floor.
306.3.3 Minimum Depth. Where knee clearance is required beneath an element as part of a clear floor space, the knee clearance shall be 11 inches (280 mm) minimum in depth at 9 inches (230 mm) above the floor, and 8 inches (205 mm) minimum in depth at 27 inches (685 mm) above the floor.
306.3.4 Clearance Reduction. Between 9 inches (230 mm) and 27 inches (685 mm) above the floor, the knee clearance shall be permitted to be reduced at a rate of 1 inch (25 mm) for each 6 inches (150 mm) in height.
306.3.5 Width. Knee clearance shall be 30 inches (760 mm) minimum in width.

307 Protruding Objects
307.1 General. Protruding objects on circulation paths shall comply with Section 307.

307.2 Protrusion Limits. Objects with leading edges more than 27 inches (685 mm) and not more than 80 inches (2030 mm) above the floor shall protrude 4 inches (100 mm) maximum horizontally into the circulation path.

EXCEPTIONS:

1. Handrails shall be permitted to protrude 4½ inches (115 mm) maximum.
2. Door closers and door stops shall be permitted to be 78 inches (1980 mm) minimum above the floor.

PASSERO ASSOCIATES
engineering architecture

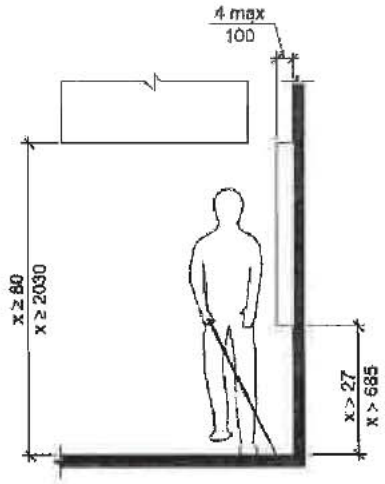

Fig. 307.2 Limits of Protruding Objects

307.3 Post-Mounted Objects. Objects on posts or pylons shall be permitted to overhang 4 inches (100 mm) maximum where more than 27 inches (685 mm) and not more than 80 inches (2030 mm) above the floor. Objects on multiple posts or pylons where the clear distance between the posts or pylons is greater than 12 inches (305 mm) shall have the lowest edge of such object either 27 inches (685 mm) maximum or 80 inches (2030 mm) minimum above the floor.

PASSERO ASSOCIATES
engineering architecture

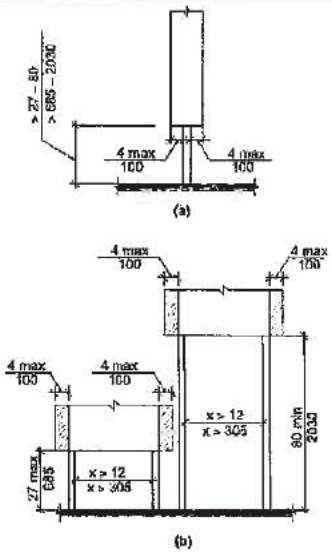

Fig. 307.3 Post-Mounted Protruding Objects

307.4 Reduced Vertical Clearance. Guardrails or other barriers shall be provided where object protrusion is beyond the limits allowed by Sections 307.2 and 307.3, and where the vertical clearance is less than 80 inches (2030 mm) above the floor. The leading edge of such guardrail or barrier shall be 27 inches (685 mm) maximum above the floor.

PASSERO ASSOCIATES
engineering architecture

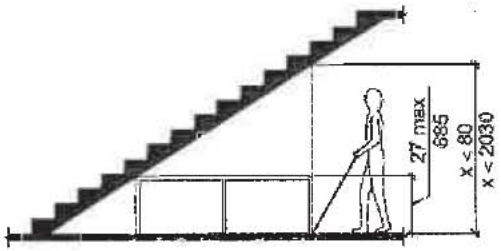

Fig. 307.4 Reduced Vertical Clearance

307.5 Required Clear Width. Protruding objects shall not reduce the clear width required for accessible routes.

308 Reach Ranges
308.1 General. Reach ranges shall comply with Section 308.
308.2 Forward Reach.

308.2.1 Unobstructed. Where a forward reach is unobstructed, the high forward reach shall be 48 inches (1220 mm) maximum and the low forward reach shall be 15 inches (380 mm) minimum above the floor.

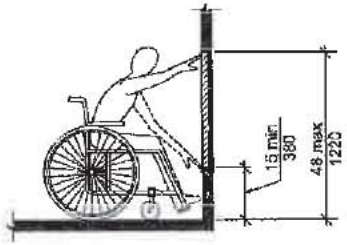

Fig. 308.2.1 Unobstructed Forward Reach
308.2.2 Obstructed High Reach. Where a high forward reach is over an obstruction, the clear floor space shall extend beneath the element for a distance not less than the required reach depth over the obstruction. The high forward reach shall be 48 inches (1220 mm) maximum where the reach depth is 20 inches (510 mm) maximum. Where the reach depth exceeds 20 inches (510 mm), the high forward reach shall be 44 inches (1120 mm) maximum, and the reach depth shall be

PASSERO ASSOCIATES
engineering architecture

25 inches (635 mm) maximum.

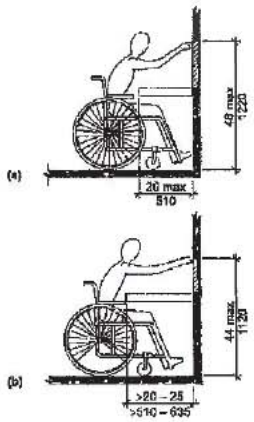

Fig. 308.2.2 Obstructed High Forward Reach

308.3 Side Reach.

308.3.1 Unobstructed. Where a clear floor space allows a parallel approach to an element and the side reach is unobstructed, the high side reach shall be 48 inches (1220 mm) maximum and the low side reach shall be 15 inches (380 mm) minimum above the floor.

EXCEPTION: Existing elements shall be permitted at 54 inches (1370 mm) maximum above the floor.

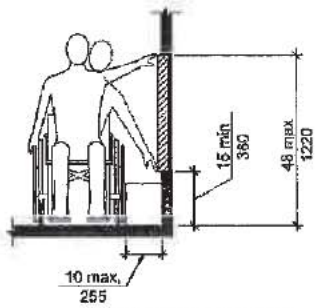

PASSERO ASSOCIATES
engineering architecture

Fig. 308.3.1 Unobstructed Side Reach

308.3.2 Obstructed High Reach. Where a clear floor space allows a parallel approach to an object and the high side reach is over an obstruction, the height of the obstruction shall be 34 inches (865 mm) maximum and the depth of the obstruction shall be 24 inches (610 mm) maximum. The high side reach shall be 48 inches (1220 mm) maximum for a reach depth of 10 inches (255 mm) maximum. Where the reach depth exceeds 10 inches (255 mm), the high side reach shall be 46 inches (1170 mm) maximum for a reach depth of 24 inches (610 mm) maximum.

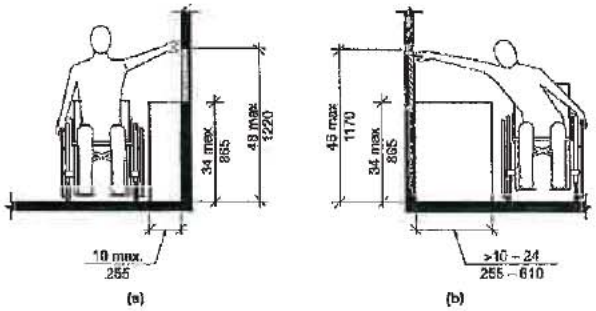

Fig. 308.3.2 Obstructed High Side Reach

309 Operable Parts

309.1 General. Operable parts required to be accessible shall comply with Section 309.

309.2 Clear Floor Space. A clear floor space complying with Section 305 shall be provided.

309.3 Height. Operable parts shall be placed within one or more of the reach ranges specified in Section 308.

309.4 Operation. Operable parts shall be operable with one hand and shall not require tight grasping, pinching, or twisting of the wrist. The force required to activate operable parts shall be 5.0 pounds (22.2 N) maximum.

44	2010 NYS ECCC & IECC 2012	**2010 NYS ECCC** **TABLE 303.1.3(1) DEFAULT GLAZED FENESTRATION *U*-FACTORS**	Glazing: .55 Insulated metal doors: .60 Roof: R-20 ci Walls: R-13+3.8ci Below grade: 7.5ci

FRAME TYPE	SINGLE PANE	DOUBLE PANE	SKYLIGHT	
			SINGLE	DOUBLE
Metal	1.20	0.80	2.00	1.30
Metal with thermal break	1.10	0.65	1.90	1.10

PASSERO ASSOCIATES
engineering architecture

Nonmetal or metal clad	0.95	0.55	1.75	1.05
Glazed block	0.60			

TABLE 303.1.3(2) DEFAULT DOOR *U*-FACTORS

DOOR TYPE	*U*-FACTOR
Uninsulated metal	1.200
Insulated metal	0.60
Wood	0.50
Insulated, nonmetal edge, max 45% glazing, any glazing double pane	0.35

TABLE 303.1.3(3) DEFAULT GLAZED FENESTRATION SHGC

SINGLE GLAZED		DOUBLE GLAZED		GLAZED BLOCK
Clear	Tinted	Clear	Tinted	
0.8	0.7	0.7	0.6	0.6

303.2.1 Protection of exposed foundation insulation. Insulation applied to the exterior of basement walls, crawl space walls and the perimeter of slab-on-grade floors shall have a rigid, opaque and weather-resistant protective covering to prevent the degradation of the insulation's thermal performance. The protective covering shall cover the exposed exterior insulation and extend a minimum of 6 inches (153 mm) below grade.

TABLE 502.1.2 BUILDING ENVELOPE REQUIREMENTS - OPAQUE ELEMENT, MAXIMUM *U*-FACTORS

CLIMATE ZONE	5
	All other
Roofs	
Insulation entirely above deck	U-0.048
Metal buildings	U-0.055
Attic and other	U-0.027
Walls, Above Grade	
Mass	U-0.090
Metal building	U-0.069
Metal framed	U-0.064
Wood framed and other	U-0.064
Below-Grade Walls[a]	
Below-grade walls[a]	C-0.119

PASSERO ASSOCIATES
engineering architecture

Floors	
Mass	U-0.074
Joist/Framing	U-0.033
Unheated slabs	F-0.730
Heated slabs	F-0.860

a. When heated slabs are placed below grade, below-grade walls must meet the *F*-factor requirements for perimeter insulati according to the heated slab-on-grade construction.

502.2 Specific insulation requirements (Prescriptive). Opaque assemblies shall comply with Table 502.2(1).

TABLE 502.2(1) BUILDING ENVELOPE REQUIREMENTS - OPAQUE ASSEMBLIES

CLIMATE ZONE	5
	All other
Roofs	
Insulation entirely above deck	R-20ci
Metal buildings (with R-5 thermal blocks[a,b])	R-13+ R-13
Attic and other	R-38
Walls, Above Grade	
Mass	R-11.4ci
Metal building[b]	R-13 + R-5.6ci
Metal framed	R-13 + R-7.5 ci
Wood framed and other	R-13 + R-3.8ci
Walls, Below Grade	
Below-grade wall[d]	R-7.5ci
Floors	
Mass	R-10ci
Joist/framing Steel/(wood)	R-30
Slab-on-Grade Floors	
Unheated slabs	NR
Heated slabs	R-15 for 24 in.below
Opaque doors	
Swinging	U – 0.70
Roll-up or sliding	U –0.50

		For SI: 1 inch = 25.4 mm. ci = Continuous insulation. NR = No requirement. a. When using R-value compliance method, a thermal spacer block is required, otherwise use the *U*-factor compliance method. [see Tables 502.1.2 and 502.2(2)]. b. Assembly descriptions can be found in Table 502.2(2). c. R-5.7 ci is allowed to be substituted with concrete block walls complying with ASTM C 90, ungrouted or partially grouted at 32 inches or less on center vertically and 48 inches or less on center horizontally, with ungrouted cores filled with material having a maximum thermal conductivity of 0.44 Btu-in./h-ft² · F°. d. When heated slabs are placed below grade, below-grade walls must meet the exterior insulation requirements for perimeter insulation according to the heated slab-on-grade construction. e. Steel floor joist systems shall be R-38.	
45	2702.1	**2702.2 Where required.** Emergency and standby power systems shall be provided where required by Sections 2702.2.1 through 2702.2.20. **[F]** **2702.2.2 Smoke control systems.** Standby power shall be provided for smoke control systems in accordance with Section 909.11. **[F]** **2702.2.3 Exit signs.** Emergency power shall be provided for exit signs in accordance with Section 1011.5.3. **[F]** **2702.2.4 Means of egress illumination.** Emergency power shall be provided for means of egress illumination in accordance with Section 1006.3. **[F]** **2702.2.10 Hazardous materials.** Emergency or standby power shall be provided in occupancies with hazardous materials in accordance with Section 414.5.4. **[F]** **2702.2.20 Smokeproof enclosures.** Standby power shall be provided for smokeproof enclosures as required by Section 909.20. **[F]** **2702.3 Maintenance.** Emergency and standby power systems shall be maintained and tested in accordance with the *Fire Code of New York State.* **[F]**	
47	2902.1	**2902.1 Minimum number of fixtures.** Plumbing fixtures shall be provided for the type of occupancy and in the minimum number shown in Table 2902.1 Types of occupancies not shown in Table 2902.1 shall be considered individually by the code enforcement official. The number of occupants shall be determined by this code. Occupancy classification shall be determined in accordance with Chapter 3. **[P]**	Water closets: 4+1 urinal male 5 female Lavatories: 4 male 4 female Drinking Fountains: 4 total (2 standing, 2 accessible) Other: 1 Service sink

PASSERO ASSOCIATES
engineering architecture

TABLE 2902.1 MINIMUM NUMBER OF REQUIRED PLUMBING FIXTURES[a] (See Sections 2902.2 and 2902.3) [P]

NO.	CLASSIFICATION	OCCUPANCY	WATER CLOSETS		LAVATORIES		BATHTUBS/ SHOWERS	DRINKING FOUNTAINS	OTHER[f]
			MALE	FEMALE	MALE	FEMALE			
2	Business (see Sections 2902.2, 2902.4 and 2902.4.1)	B	1 per 25 for the first 50 and 1 per 50 for the remainder exceeding 50	1 per 25 for the first 50 and 1 per 50 for the remainder exceeding 50	1 per 40 for the first 80 and 1 per 80 for the remainder exceeding 80	1 per 40 for the first 80 and 1 per 80 for the remainder exceeding 80	—	1 per 100	1 service sink
4	Factory and industrial	F-1 and F-2	1 per 100	1 per 100	1 per 100	1 per 100	See Section 411 of the *Plumbing Code of New York State*	1 per 400	1 service sink

(continued)

TABLE 2902.1—continued MINIMUM NUMBER OF REQUIRED PLUMBING FIXTURES[a] [P]

NO.	CLASSIFICATION	OCCUPANCY	WATER CLOSETS		LAVATORIES		BATHTUBS/ SHOWERS	DRINKING FOUNTAINS	OTHER[f]
			MALE	FEMALE	MALE	FEMALE			
8	Storage (see Sections 2902.2, 2902.4 and 2902.4.1)	S-1 S-2	1 per 100	1 per 100	1 per 100	1 per 100	See Section 411 of the *Plumbing Code of New York State*	1 per 1,000	1 service sink

a. The fixtures shown are based on one fixture being the minimum required for the number of persons indicated or any fraction of the number of persons indicated. The number of occupants shall be determined by this code.

b. Toilet facilities for employees shall be separate from facilities for inmates or patients.

c. A single-occupant toilet room with one water closet and one lavatory serving not more than two adjacent patient sleeping units shall be permitted where such room is provided with direct access from each patient room and with provisions for privacy.

d. The occupant load for seasonal outdoor seating and entertainment areas shall be included when determining the minimum number of facilities required.

		e. Fixtures located in adjacent buildings under the ownership or control of the church or other place of worship shall be made available during periods the church or other place of worship is occupied. f. See *Plumbing Code of New York State* for exceptions.	
49	FC503.1	**503.1 Where required.** Fire apparatus access roads shall be provided and maintained in accordance with Sections 503.1.1 through 503.1.3. **503.1.1 Buildings and facilities.** Approved fire apparatus access roads shall be provided for every facility, building or portion of a building hereafter constructed or moved into or within the jurisdiction. The fire apparatus access road shall comply with the requirements of this section and shall extend to within 150 feet (45 720 mm) of all portions of the facility and all portions of the exterior walls of the first story of the building as measured by an approved route around the exterior of the building or facility. **Exceptions:** 1. The distance is permitted to be 300 feet (91 440 mm) where the building is equipped throughout with an approved automatic sprinkler system installed in accordance with 903.3.1.1 or 903.3.1.2, when approved by the code enforcement official. 2. Fire apparatus access roads cannot be installed because of location on property, topography, waterways, nonnegotiable grades or other similar conditions, is equipped with an automatic sprinkler system in accordance with 903.3.1.1, and an approved alternative means of fire protection is provided. 3. Fire apparatus access roads are not required for detached one- and two-family dwellings regulated by the *Residential Code of New York State*, and for not more than two Group R-3 occupancies, when provided with emergency vehicle access in accordance with Section 511. 4. Fire apparatus access roads are not required for Group U occupancies. 5. Area additions to buildings not exceeding 33 percent of the original floor area or increasing the building area beyond those permitted by Section 506 of the *Building Code of New York State*. This exception does not apply to the addition of stories to a building. **503.1.2 Additional access.** The code enforcement official is authorized to require more than one fire apparatus access road based on the potential for impairment of a single road by vehicle congestion, condition of terrain, climatic conditions or other factors that could limit access. **503.2 Specifications.** Fire apparatus access roads shall be installed and arranged in accordance with Sections 503.2.1 through 503.2.7 and Appendix D. **503.2.1 Dimensions.** Fire apparatus access roads shall have an unobstructed width of not less than 20 feet (6096 mm), except for approved security gates in accordance with Section 503.6, and an unobstructed vertical clearance of not less than 13 feet, 6 inches (4115 mm). Fire apparatus access roads shall also meet the width requirements of Sections D103.1 and D105 of Appendix D. **503.2.2 Authority.** The code enforcement official shall have the authority to require an increase in the minimum access widths where they are inadequate for fire or rescue operations. **503.2.3 Surface.** Fire apparatus access roads shall be designed per Section D102.1 of Appendix D, maintained to support	

PASSERO ASSOCIATES
engineering architecture

		the imposed loads of fire apparatus and shall be surfaced so as to provide all-weather driving capabilities. **503.2.4 Turning radius.** The required turning radius of a fire apparatus access road shall be determined by the code enforcement official. **503.2.5 Dead ends.** Dead-end fire apparatus access roads in excess of 150 feet (45 720 mm) in length shall be provided with an approved area for turning around fire apparatus as required in Section D103.4 of Appendix D. **503.2.7 Grade.** The grade of the fire apparatus access road shall be within the limits established by the code enforcement offical or by D103.2, based on the fire department's apparatus. **503.3 Marking.** Where required by the code enforcement official, approved signs or other approved notices shall be provided for fire apparatus access roads to identify such roads or prohibit the obstruction thereof. Signs or notices shall be maintained in a clean and legible condition at all times and be replaced or repaired when necessary to provide adequate visibility. **503.4 Obstruction of fire apparatus access roads.** Fire apparatus access roads shall not be obstructed in any manner, including the parking of vehicles. The minimum widths and clearances established in Section 503.2.1 shall be maintained at all times. **503.5 Required gates or barricades.** The code enforcement official is authorized to require the installation and maintenance of gates or other approved barricades across fire apparatus access roads, trails or other accessways, not including public streets, alleys or highways. **503.5.1 Secured gates and barricades.** When required, gates and barricades shall be secured in an approved manner. Roads, trails and other accessways that have been closed and obstructed in the manner prescribed by Section 503.5 shall not be trespassed on or used unless authorized by the owner and the code enforcement official. **Exception:** The restriction on use shall not apply to public officers acting within the scope of duty. **503.6 Security gates.** The installation of security gates across a fire apparatus access road shall be approved by the fire chief. Where security gates are installed, they shall have an approved means of emergency operation. The security gates and the emergency operation shall be maintained operational at all times.	

Appendix B: Architectural Program

A SEPARATE "APPENDIX B" SHALL BE COMPLETED FOR EACH SEPARATE BUILDING AND/OR FACILITY INCLUDED IN THE ORGANIZATION'S BUSINESS PLAN

COMPANY INFORMATION

Business Name:	Citiva Medical
Facility Type:	Manufacturing Facility ☐ Dispensing Facility ☑
Use and Occupancy Classification:	Mercantile
Building Construction Type and Classification:	VB
Facility Address:	4-26 Hinchey Road Rochester, NY
Primary Contact Telephone number:	Michael Caridi 1-516-852-2549
Primary Contact Fax number:	mcaridi@citivamedical.com

PART I – ARCHITECTURAL PROGRAM & CONSTRUCTION TIMELINE:

Applicant shall identify planning requirements, including but not limited to:

- ☐ TOWN BOARD APPROVAL
- ☑ PLANNING BOARD APPROVAL
- ☐ ZONING BOARD OF APPEALS APPROVAL
- ☑ PREPARATION OF CONSTRUCTION DOCUMENTS
- ☑ BUILDING PERMIT
- ☑ BIDDING PHASE
- ☑ CONTRACT AWARD PHASE PER EACH APPLICABLE CONTRACTOR (Identify all that apply)
- ☑ COMMENCEMENT OF CONSTRUCTION
- ☑ COMPLETION OF CONSTRUCTION

Appendix B – Architectural Program

PART II – SITE PLAN(S)

Applicant shall provide the appropriate details for each of the following by identifying the location and dimension on the Site Plan attached to the application for each building location.

- ☑ Entrance and Exits
- ☑ Public Parking Spaces
- ☑ Staff Parking Spaces
- ☑ Accessible Parking Spaces
- ☑ Accessible Route(s)
- ☑ Fire Lane and/or Fire Apparatus Road
- ☑ Percentage of Green Space
- ☑ Location of Emergency Power Systems
- ☑ Loading & Unloading
- ☑ Security Gates & Fences

PART III – ENERGY SOURCES & ENGINEERING SYSTEMS:

Applicant shall provide the following minimum information to outline the specifications relating to the energy sources and engineering systems of each building included in the application.

Energy Source:

☑ Natural Gas ☐ Oil ☑ Electric
☐ Solar ☐ Other _____

Engineering Systems:

☑ Heating System: Type Gas, Size Varies Efficiency 80% e.t.,
Ventilation Requirements NYSMC Occupancy Compliance

☑ Cooling System: Type DX, Size Varies Efficiency 9.5-13 SEER
Ventilation Requirements NYSMC Occupancy Compliance

☑ Ventilation & Humidification Systems:
Type Ultrasoni, Size Varies, Efficiency 100%,
Ventilation Requirements NYSMC Occupancy Compliance

☑ Electrical Distribution Available Yes On-Site

☑ Water Supply: Municipal Water Service X or Private Well Water _____

☑ Sewage: Municipal Sewer System X or Private Septic System _____

☑ Emergency Power System:
Type NG, Size Varies Efficiency 60-80%,

Appendix B – Architectural Program

PART IV – BUILDING CODE COMPLIANCE: (pages 3-13)

CHECK ALL APPLICABLE CODES FOR THE FACILITY

- [x] 2010 BUILDING CODE OF NYS
- [x] 2010 FIRE CODE OF NYS
- [x] 2010 PLUMBING CODE OF NYS
- [x] 2010 MECHANICAL CODE OF NYS
- [x] 2010 FUEL GAS CODE OF NYS
- [x] 2010 PROPERTY MAINTENANCE CODE OF NYS
- [x] 2010 ENERGY CONSERVATION CONSTRUCTION CODE OF NYS
- [x] 2012 IECC COMMERCIAL PROVISIONS
- [x] 2010 EXISTING BUILDING CODE OF NYS
- [x] NEC NATIONAL ELECTRIC CODE, (Specify Applicable Version)
- [ ] 2014 NY CITY CONSTRUCTION CODE
- [ ] 2008 NY CITY CONSTRUCTION CODE
- [ ] 1968 NY CITY CONSTRUCTION CODE
- [x] NFPA 101-06 LIFE SAFETY CODE
- [x] ICC/ANSI A117.1-03 ACCESSIBLE AND USABLE BUILDINGS AND FACILITIES
- [x] OTHER

Appendix B – Architectural Program

Select Project Type:
Check all that apply. Refer to the Existing Building Code for definitions.

- ☐ New Building
- ☐ Repair
- ☐ Alteration Level 1
- ☐ Alteration Level 2
- ☑ Alteration Level 3
- ☑ Change of Occupancy
- ☐ Addition
- ☐ Historic Building
- ☐ Demolition
- ☐ Chapter 3. Prescriptive Compliance Method
- ☐ Chapter 13. Performance Compliance Method

Select Work Involved:
Check all that apply.

- ☑ General Construction
- ☐ Roofing
- ☐ Asbestos Abatement/Environmental
- ☑ Fire Alarm
- ☑ Structural
- ☑ Mechanical
- ☑ Plumbing
- ☑ Electrical
- ☐ Site Work
- ☐ Sprinkler
- ☐ Elevators
- ☐ Other:_____

CODE COMPLIANCE REVIEW

Applicant shall provide all applicable information in regards to the code topic and section listed below.

1. Code Compliance Review is based on the 2010 NY State Building Code for New Construction. If any other building code applies to the location or type of construction, provide applicable code and sections that most closely relates and references the code topic and information in the code sections listed below. Provide appropriate abbreviations for other applicable codes, such as: **FC:** ***Fire Code*****, PC:** ***Plumbing Code*****, MC:** ***Mechanical Code*****, FGC:** ***Fuel Gas Code*****, ECCC:** ***Energy Conservation Code.***
2. Provide the Required standard for each applicable code section. (i.e.: area, quantity, classification type, materials, hourly separation, etc.). If section does not apply, indicate one of the following with explanation: **NA:** *Not Applicable*, **NR:** *Not Required*, **NP:** *Not Permitted*
3. Provide your facilities "Actual" value for each required standard as per applicable code section.

No.	Topic	NYS Building Code Section	Other Code[1] (as Stated Above) & Section	Minimum Information Required to be Identified for this building/facility on the Building or Site Plan(s)	Required Code Value[2] /Allowed Code Value	Facility's Actual Value[3]
1	Use & Occupancy Classification	302.1 - 312		Use & occupancy of this facility. Identify all applicable materials, class and quantities regarding Table 307.1.	Mercantile	Mercantile

Appendix B – Architectural Program

No.	Topic	NYS Building Code Section	Other Code[1] (as Stated Above) & Section	Minimum Information Required to be Identified for this building/facility on the Building or Site Plan(s)	Required Code Value[2] /Allowed Code Value	Facility's Actual Value[3]
2	Combustible Storage	413		All combustible storage areas and rooms, as per applicable Building and Fire Codes. Identify all combustible stored materials, area and room dimensions, all required fire separations, and exit requirements.	N/A	N/A
3	Hazardous Materials	414		All hazardous materials stored or used as per applicable Building and Fire Codes. Identify all combustible stored materials, area and room dimensions, all required fire separations, and exit requirements.	N/A	N/A
4	Hazardous Materials Control Areas	414.2		Provide additional information indicating number, size, materials stored, and quantity of each material.	N/A	N/A
5	Building Area & Height	501-507		Provide the building area & height Provide all calculations and cite applicable code sections for increased Building Area & Heights allowed per building code(s).	1 Story 9,000 SF	1 Story 2,750 SF
6	Incidental Use Areas	508.2		Identify all Incidental Use Areas and required fire separation of occupancies on Building Plans.	N/A	N/A

Appendix B – Architectural Program

No.	Topic	NYS Building Code Section	Other Code[1] (as Stated Above) & Section	Minimum Information Required to be Identified for this building/facility on the Building or Site Plan(s)	Required Code Value[2] /Allowed Code Value	Facility's Actual Value[3]
7	Mixed Occupancies	508.3		Provide analysis with code cited, and required fire separation of occupancies. Identify required fire separation of occupancies on Building Plan(s).	All applicable sections Refer to attached for details	Fully compliant Mercantile / Buisness
8	Nonseparated Uses	508.3.2		Provide analysis with code cited, and required fire separation of occupancies. Identify required fire separation of occupancies on Building Plan(s).	All applicable sections Refer to attached for details	Fully compliant Mercantile / Buisness - Accessory Storage
9	Separated Uses (Ratio < 1)	508.3.3		Provide analysis with code cited, and required fire separation of occupancies. Identify required fire separation of occupancies on Building Plan(s).	N/A	N/A
10	Construction Classification	602		Provide Construction Classification per each building included in Application.	VB	VB
11	Fire Resistance Rating Reqm't for Building Elements	Table 601		Provide Fire Resistance Rating per each building element as per Table 601. Identify rating & elements on Building Plans.	0-hr	0-hr

Appendix B – Architectural Program

No.	Topic	NYS Building Code Section	Other Code[1] (as Stated Above) & Section	Minimum Information Required to be Identified for this building/facility on the Building or Site Plan(s)	Required Code Value[2] /Allowed Code Value	Facility's Actual Value[3]
12	Exterior Wall Fire-Resistance Rating	Table 602		Identify required fire resistance rating of exterior walls on Building Plan(s).	0-hr Refer to attached for details	0-hr
13	Exterior Fire Separation Distance	Table 602		Identify required fire separation distance of exterior walls between Buildings on Plan.	Refer to attached for details	Greater than 30 ft.
14	Fire Walls	705		Provide code information and identify all applicable required Fire Wall(s) and fire resistance requirement on Building Plans.	N/A	N/A
15	Fire Barriers	706		Provide code information and identify all applicable required Fire Barrier(s) and fire resistance requirement on Building Plans.	Refer to attached for details	Tenant demising wall See floor plans
16	Shaft Enclosures	707		Provide code information and identify all applicable required Shaft Wall(s) and fire resistance requirement on Building Plans.	N/A	N/A
17	Fire Partitions	708		Provide code information and identify all applicable required Fire Partition(s) and fire resistance requirement on Building Plans.	N/A	N/A

Appendix B – Architectural Program

No.	Topic	NYS Building Code Section	Other Code[1] (as Stated Above) & Section	Minimum Information Required to be Identified for this building/facility on the Building or Site Plan(s)	Required Code Value[2] /Allowed Code Value	Facility's Actual Value[3]
18	Horizontal Assemblies	711		Provide code information and identify all applicable required Horizontal Assemblies and fire resistance requirement on Building Plans.	N/A	N/A
19	Fire Protection: Sprinkler System	903		Indicate Type of Sprinkler System: ☐ NFPA 13 ☐ NFPA 13 R ☐ NFPA 13D Provide code information of all applicable requirements for Automatic Sprinkler Systems with code section cited.	N/A	N/A
20	Alt. Fire Extinguishing System	904		Provide code information of all applicable requirements for Alternative Automatic Fire-Extinguishing Systems with code section(s) cited.	N/A	N/A
21	Standpipe System	905		Provide code information of all applicable requirements for Standpipe Systems with code section(s) cited.	N/A	N/A
22	Fire Alarm & Detection Systems	907		Provide code information of all applicable requirements for Fire Alarm System(s) with code section cited. Indicate Type of Fire Alarm System ☑ Addressable ☐ Hardwired (zoned)	All applicable sections Refer to attached for details	Fully compliant

Appendix B – Architectural Program

No.	Topic	NYS Building Code Section	Other Code[1] (as Stated Above) & Section	Minimum Information Required to be Identified for this building/facility on the Building or Site Plan(s)	Required Code Value[2] /Allowed Code Value	Facility's Actual Value[3]
23	Emergency Alarm System	908		Provide code information of all applicable requirements for Emergency Alarm Systems with code section cited.	N/A	N/A
24	Fire Department Connections	912		Identify Fire Department connections in accordance with NFPA applicable standard.	All applicable sections. Refer to attached for details	Fully compliant
25	Exits	1001.1 &2		Identify on the Building Plans and documents, per each door, the following information: door width, door height, direction of swing, type of construction, hourly rating, and door closures.	All applicable sections Refer to attached for details	See plans
26	Occupant Load	1004 & Table 1004.1.1		Identify the use/name of each room, dimensions of each room, and Occupant Loads per each room on the Building Plans.	Values per table 1004.1.1 Refer to attached for details	80
27	Egress Width	1005		Provide egress widths & cite applicable code section(s) and requirement(s) on the Building Plans	8.6" min. per table 1005.1 32" clear doors	36" min. door openings, see plans
28	Accessible Means of Egress	1007.1		Provide accessible means of egress as per Section 1007 & cite applicable code section(s) and requirement(s) on the Building Plans.	(2) Means of Egress Refer to attached for details	(2) Means of Egress All means of egress to meet req.'s of section 1007

Appendix B – Architectural Program

No.	Topic	NYS Building Code Section	Other Code[1] (as Stated Above) & Section	Minimum Information Required to be Identified for this building/facility on the Building or Site Plan(s)	Required Code Value[2] /Allowed Code Value	Facility's Actual Value[3]
29	Doors, Gates, and Turnstiles	1008		Means of egress doors shall meet the requirements of this section.	Refer to attached for details	See plans
30	Interior Stairs	1009		Identify the following information for each stairway on the Building Plan(s): the width of stairways; the height, width, depth and number of risers and treads; dimensions of landings; stairway construction type; and handrail height.	N/A	N/A
31	Ramps	1010.1		Identify the following information of each ramp, on the Building Plan(s): width; total vertical rise; length of ramp; and handrail height.	N/A	N/A
32	Common Path of Travel	1014.3		Identify on the Building Plan(s): the length of the "Common Path of Travel" per each room as per applicable building code requirements.	75'-0" max.	48'-0"
33	Exit Doorway Arrangement	1015		Identify on the Building Plan(s): applicable building code requirements for all Exits and Exit Access Doorways per each room and required exits in all buildings.	All applicable sections Refer to attached for details	See plans
34	Corridor Fire Rating	1017.1		Identify, on the Building Plan(s): all corridors with required fire resistance and the applicable fire rating.	All applicable sections. Refer to attached for details	See plans

Appendix B – Architectural Program

No.	Topic	NYS Building Code Section	Other Code[1] (as Stated Above) & Section	Minimum Information Required to be Identified for this building/facility on the Building or Site Plan(s)	Required Code Value[2] /Allowed Code Value	Facility's Actual Value[3]
35	Corridor Width	1017.2		Identify on the Building Plan(s): the width of all corridors. Provide applicable code section(s) and requirement(s).	44" min. per section 1017.2	70"
36	Dead End Corridor	1017.3		Corridors shall not exceed the maximum dead end corridor length as per applicable code.	20'-0" max.	N/A
37	Number of Exits and Continuity	1019		Identify on the Building Plan(s): required number of exits, continuity and arrangement as per the applicable code requirements.	2 min.	2
38	Vertical Exit Enclosures	1020		Identify on the Building Plan(s): all applicable code requirements for each Vertical Exit Enclosure.	N/A	N/A
39	Exit Passageways	1021		Identify on the Building Plan(s): all applicable code requirements for each Exit Passageway.	All applicable sections Refer to attached for details	See plans
40	Horizontal Exits	1022		Identify on the Building Plan(s): all applicable code requirements for each Horizontal Exit.	All applicable sections	See plans

Appendix B – Architectural Program

No.	Topic	NYS Building Code Section	Other Code[1] (as Stated Above) & Section	Minimum Information Required to be Identified for this building/facility on the Building or Site Plan(s)	Required Code Value[2] /Allowed Code Value	Facility's Actual Value[3]
41	Exterior Exit Ramps & Stairways	1023		Identify on the Building Plan(s): all applicable code requirements for each exterior exit ramps and stairways.	N/A	N/A
42	Exit Discharge	1024		Identify on the Building Plan(s): all applicable code requirements for each Exit Discharge.	N/A	N/A
43	Accessibility	1101.1 - 1110 & ICC/A117. 1(03)		Identify on the Building Plan(s): all applicable code requirements such that the design and construction of each building/facility provides accessibility to physically disabled persons.	All applicable sections Refer to attached for details	Fully compliant
44	Energy Conservation	2010 NYS ECCC & IECC 2012		Identify the R-Value and U-Value of each construction component and assembly of the building envelope as required in the applicable energy and building code(s).	All applicable sections Refer to attached for details	Fully compliant
45	Emergency & Standby Power	2702.1		Identify emergency & Standby Power locations and specifications of the system to be provided.	All applicable sections Refer to attached for details	Fully compliant
46	Smoke Control Systems	2702.2.2		Identify the Standby power for smoke control systems in accordance with Section 909.11 of NYS Building Code.	All applicable sections Refer to attached for details	Fully compliant

Appendix B – Architectural Program

No.	Topic	NYS Building Code Section	Other Code[1] (as Stated Above) & Section	Minimum Information Required to be Identified for this building/facility on the Building or Site Plan(s)	Required Code Value[2] /Allowed Code Value	Facility's Actual Value[3]
47	Plumbing Fixture Count	2902.1		Identify on the Building Plan(s): the minimum plumbing facilities as per applicable plumbing code(s).	1 for each. Refer to attached for details	1 for each, see plans
48	Available Street Water Pressure			Provide the available street or well water pressure.		52 psi
49	Fire Apparatus Access Road	FC503.1		Identify on the Site Plan: Fire Apparatus Road, Fire Lane and other Fire Service requirements per applicable Building and Fire Codes.	All applicable sections	Fully compliant

PASSERO ASSOCIATES
engineering architecture

<table>
<tr><th>NO.</th><th>NYS BUILDING CODE SECTION</th><th>REQUIRED CODE VALUE / ALLOWED CODE VALUE</th></tr>
<tr><td>7</td><td>508.3</td><td>508.3 Mixed occupancies. Each portion of a building shall be individually classified in accordance with Section 302.1.
Where a building contains more than one occupancy group, the building or portion thereof shall comply with Sections 508.3.1, 508.3.2, 508.3.3 or a combination of these sections.
Exceptions:
1. Occupancies separated in accordance with Section 509.</td></tr>
<tr><td>8</td><td>508.3.2</td><td>508.3.2 Nonseparated occupancies. Buildings or portions of buildings that comply with the provisions of this section shall qualify as nonseparated occupancies.</td></tr>
<tr><td>12</td><td>Table 602</td><td>TABLE 602 FIRE-RESISTANCE RATING REQUIREMENTS FOR EXTERIOR WALLS BASED ON FIRE SEPARATION DISTANCE[e]
<table>
<tr><th>FIRE SEPARATION DISTANCE = X (feet)</th><th>TYPE OF CONSTRUCTION</th><th>OCCUPANCY GROUP M</th></tr>
<tr><td>X<5[c]</td><td>All</td><td>2</td></tr>
<tr><td rowspan="2">5>X<10</td><td>IA</td><td>2</td></tr>
<tr><td>Others</td><td>1</td></tr>
<tr><td rowspan="3">10>X<30</td><td>IA, IB</td><td>1</td></tr>
<tr><td>IIB, VB</td><td>0</td></tr>
<tr><td>Others</td><td>1</td></tr>
<tr><td>X>30</td><td>All</td><td>0</td></tr>
</table>
a. Load-bearing exterior walls shall also comply with the fire-resistance rating requirements of Table 601.
b. For special requirements for Group U occupancies see Section 406.1.2
c. See Section 705.1.1 for party walls.
d. Open parking garages complying with Section 406 shall not be required to have a fire-resistance rating.
e. The fire-resistance rating of an exterior wall is determined based upon the fire separation distance of the exterior wall and the story in which the wall is located.</td></tr>
<tr><td>15</td><td>706</td><td>SECTION 706 FIRE BARRIERS</td></tr>
</table>

PASSERO ASSOCIATES
engineering architecture

706.1 General. Fire barriers installed as required elsewhere in this code or the *Fire Code of New York State* shall comply with this section.
706.2 Materials. Fire barriers shall be of materials permitted by the building type of construction.

706.2.1 Fire-resistance-rated glazing. Fire-resistance-rated glazing, when tested in accordance with ASTM E 119 and complying with the requirements of Section 706, shall be permitted. Fire-resistance-rated glazing shall bear a label or other identification showing the name of the manufacturer, the test standard and the identifier "W-XXX," where the "XXX" is the fire-resistance rating in minutes. Such label or identification shall be issued by an approved agency and shall be permanently affixed to the glazing.

706.3 Fire-resistance rating. The fire-resistance rating of fire barriers shall comply with this section.

706.3.8 Separation of mixed occupancies. Where the provisions of Section 508.3.3 are applicable, the fire barrier separating mixed occupancies shall have a fire-resistance rating of not less than that indicated in Section 508.3.3 based on the occupancies being separated.
706.3.9 Fire areas. The fire barrier or horizontal assembly, or both, separating a single occupancy into different fire areas shall have a fire-resistance rating of not less than that indicated in Table 706.3.9. The fire barriers or horizontal assemblies, or both, separating fire areas of mixed occupancies shall have a fire-resistance rating of not less than the highest value indicated in Table 706.3.9 for the occupancies under consideration.

TABLE 706.3.9 FIRE-RESISTANCE RATING REQUIREMENTS FOR FIRE BARRIER ASSEMBLIES BETWEEN FIRE AREAS

OCCUPANCY GROUP	FIRE-RESISTANCE RATING (hours)
A, B, E, F-2, H-4, H-5, I, M, R, S-2	2

706.4 Exterior walls. Where exterior walls serve as a part of a required fire-resistance-rated shaft or exit enclosure or separation, such walls shall comply with the requirements of Section 704 for exterior walls and the fire-resistance-rated enclosure requirements shall not apply.

Exception: Exterior walls required to be fire-resistance rated in accordance with Section 1014.5.1 for exterior egress balconies, Section 1020.1.4 for exit enclosures and Section 1023.6 for exterior exit ramps and stairways.

706.5 Continuity. Fire barriers shall extend from the top of the floor/ceiling assembly below to the underside of the floor or roof slab or deck above and shall be securely attached thereto. Such fire barriers shall be continuous through concealed spaces, such as the space above a suspended ceiling. The supporting construction for fire barrier walls shall be protected to afford the required fire-resistance rating of the fire barrier supported, except for 1-hour fire-resistance-rated incidental use area separations as required by Table 508.2 in buildings of Type IIB, IIIB and VB construction. Hollow vertical spaces within a fire barrier shall be fireblocked in accordance with Section 717.2 at every floor level.

Exceptions:

1. The maximum required fire-resistance rating for assemblies supporting fire barriers separating tank storage as provided for in Section 415.6.2.1

PASSERO ASSOCIATES
engineering architecture

		shall be 2 hours, but not less than required by Table 601 for the building construction type. 2. Shaft enclosures shall be permitted to terminate at a top enclosure complying with Section 707.12. **706.7 Openings.** Openings in a fire barrier wall shall be protected in accordance with Section 715. Openings shall be limited to a maximum aggregate width of 25 percent of the length of the wall, and the maximum area of any single opening shall not exceed 156 square feet (15 m²). Openings in exit enclosures and exit passageways shall also comply with Sections 1020.1.1 and 1021.4, respectively. **Exceptions:** 1. Openings shall not be limited to 156 square feet (15 m²) where adjoining fire areas are equipped throughout with an automatic sprinkler system in accordance with Section 903.3.1.1. 2. Fire doors serving an exit enclosure. 3. Openings shall not be limited to 156 square feet (15 m²) or an aggregate width of 25 percent of the length of the wall where the opening protective assembly has been tested in accordance with ASTM E 119 and has a minimum fire-resistance rating not less than the fire-resistance rating of the wall. 4. Fire windows permitted in atrium separation walls shall not be limited to a maximum aggregate width of 25 percent of length of the wall. **706.8 Penetrations.** Penetrations of fire barriers shall comply with Section 712. **706.8.1 Prohibited penetrations.** Penetrations into an exit enclosure or an exit passageway shall be allowed only when permitted by Section 1020.1.2 or 1021.5, respectively. **706.9 Joints.** Joints made in or between fire barriers shall comply with Section 713. **706.10 Ducts and air transfer openings.** Penetrations in a fire barrier by ducts and air transfer openings shall comply with Section 716.
22	907	**SECTION 907 FIRE ALARM AND DETECTION SYSTEMS** **907.1 General.** This section covers the application, installation, performance and maintenance of fire alarm systems and their components. **[F]** **907.1.1 Construction documents.** Construction documents for fire alarm systems shall be submitted for review and approval prior to system installation. Construction documents shall include, but not be limited to, all of the following: **[F]** 1. A floor plan which indicates the use of all rooms. 2. Locations of alarm-initiating and notification appliances. 3. Alarm control and trouble signaling equipment. 4. Annunciation. 5. Power connection. 6. Battery calculations. 7. Conductor type and sizes. 8. Voltage drop calculations. 9. Manufacturers, model numbers and listing information for equipment, devices and materials. 10. Details of ceiling height and construction. 11. The interface of fire safety control functions. **907.1.2 Equipment.** Systems and their components shall be listed and approved for the purpose for which they are installed. **[F]** **907.2 Where required-new buildings and structures.** An approved manual fire alarm system, automatic fire detection system or automatic heat

detection system installed in accordance with the provisions of this code and NFPA 72 shall be provided in new buildings and structures in accordance with Sections 907.2.1 through 907.2.23 and provide occupant notification in accordance with Section 907.9, unless other requirements are provided by another section of this code. Where automatic sprinkler protection installed in accordance with Section 903.3.1.1 or 903.3.1.2 is provided and connected to the building fire alarm system, automatic heat detection required by this section shall not be required.

The automatic fire detectors shall be smoke detectors. Where ambient conditions prohibit installation of automatic smoke detection, other automatic fire detection shall be allowed.

907.2.7 Group M. A manual fire alarm system shall be installed in Group M occupancies having an occupant load of 500 or more persons or more than 100 persons above or below the lowest level of exit discharge. The initiation of a signal from a manual fire alarm box shall initiate alarm notification appliances as required by Section 907.9. **[F]**

Exceptions:
1. Covered mall buildings complying with Section 402.
2. Manual fire alarm boxes are not required where the building is equipped throughout with an automatic sprinkler system and the alarm notification appliances will automatically activate upon sprinkler water flow.

907.2.7.1 Occupant notification. During times that the building is occupied, the initiation of a signal from a manual fire alarm box or from a water flow switch shall not be required to activate the alarm notification appliances when an alarm signal is activated at a constantly attended location from which evacuation instructions shall be initiated over an emergency voice/alarm communication system installed in accordance with Section 907.2.12.2.

The emergency voice/alarm communication system shall be allowed to be used for other announcements provided the manual fire alarm use takes precedence over any other use.

907.2.7.2 Fire detection. Areas of Group M buildings that are not protected by an automatic sprinkler system and that have an occupant load of more than 100 persons shall be provided with automatic smoke detection or automatic heat detection installed in accordance with NFPA 72.

907.2.10 Single- and multiple-station smoke alarms. Listed single- and multiple-station smoke alarms complying with UL 217 shall be installed in accordance with the provisions of this code and the household fire-warning equipment provisions of NFPA 72. **[F]**

907.2.10.1 Where required. Single- or multiple-station smoke alarms shall be installed in the locations described in Sections 907.2.10.1.1 through 907.2.10.1.3. **[F]**

907.2.10.2 Power source. In new construction, required smoke alarms shall receive their primary power from the building wiring where such wiring is served from a commercial source and shall be equipped with a battery backup. Smoke alarms shall emit a signal when the batteries are low. Wiring shall be permanent and without a disconnecting switch other than as required for overcurrent protection. **[F]**

907.2.10.4 Acceptance testing. When the installation of the alarm devices is complete, each detector and interconnecting wiring for multiple-station alarm devices shall be tested in accordance with the household fire warning equipment provisions of NFPA 72. **[F]**

907.2.15 Delayed egress locks. Where delayed egress locks are installed on means of egress doors in accordance with Section 1008.1.8.6, an automatic smoke or heat detection system shall be installed as required by that section. **[F]**

907.3 Manual fire alarm boxes. Manual fire alarm boxes shall be installed in accordance with Sections 907.3.1 through 907.3.5. **[F]**

907.3.1 Location. Manual fire alarm boxes shall be located not more than 5 feet (1524 mm) from the entrance to each exit. Additional manual fire alarm boxes shall be located so that travel distance to the nearest box does not exceed 200 feet (60 960 mm). **[F]**

Exception: In buildings protected by an automatic sprinkler system in accordance with 903.3.1.1 or 903.3.1.2, the travel distance to the nearest

box shall not apply.

907.3.2 Height. The height of the manual fire alarm boxes shall be a minimum of 42 inches (1067 mm) and a maximum of 48 inches (1219 mm), measured vertically, from the floor level to the activating handle or lever of the box. **[F]**

907.3.3 Color. Manual fire alarm boxes shall be red in color. **[F]**

907.3.4 Signs. Where fire alarm systems are not monitored by a supervising station, an approved permanent sign shall be installed adjacent to each manual fire alarm box that reads: WHEN ALARM SOUNDS-CALL FIRE DEPARTMENT. **[F]**

Exception: Where the manufacturer has permanently provided this information on the manual fire alarm box.

907.3.5 Protective covers. The code enforcement official is authorized to require the installation of listed manual fire alarm box protective covers to prevent malicious false alarms or to provide the manual fire alarm box with protection from physical damage. The protective cover shall be transparent or red in color with a transparent face to permit visibility of the manual fire alarm box. Each cover shall include proper operating instructions. A protective cover that emits a local alarm signal shall not be installed unless approved. **[F]**

907.4 Power supply. The primary and secondary power supply for the fire alarm system shall be provided in accordance with NFPA 72.

907.5 Wiring. Wiring shall comply with the requirements of NFPA 70 and NFPA 72. Wireless protection systems utilizing radio-frequency transmitting devices shall comply with the special requirements for supervision of low-power wireless systems in NFPA 72. **[F]**

907.6 Activation. Where an alarm notification system is required by another section of this code, it shall be activated by: **[F]**

1. A required automatic fire alarm system.
2. Sprinkler water-flow devices.
3. Required manual fire alarm boxes.

907.8 Zones. Each floor shall be zoned separately and a zone shall not exceed 22,500 square feet (2090 m²). The length of any zone shall not exceed 300 feet (91 440 mm) in any direction. **[F]**

Exception: Automatic sprinkler system zones shall not exceed the area permitted by NFPA 13.

907.8.1 Zoning indicator panel. A zoning indicator panel and the associated controls shall be provided in an approved location. The visual zone indication shall lock in until the system is reset and shall not be canceled by the operation of an audible alarm-silencing switch. **[F]**

907.9 Alarm notification appliances. Alarm notification appliances shall be provided and shall be listed for their purpose. **[F]**

907.9.1 Visible alarms. Visible alarm notification appliances shall be provided in accordance with Sections 907.9.1.1 through 907.9.1.4. **[F]**

Exceptions:

1. Visible alarm notification appliances are not required in alterations, except where an existing fire alarm system is upgraded or replaced, or a new fire alarm system is installed.
2. Visible alarm notification appliances shall not be required in exits as defined in Section 1002.1.

907.9.1.1 Public and common areas. Visible alarm notification appliances shall be provided in public areas and common areas. **[F]**

907.9.1.2 Employee work areas. Where employee work areas have audible alarm coverage, the notification appliance circuits serving the employee work areas shall be initially designed with a minimum of 20 percent spare capacity to account for the potential of adding visible notification appliances in the future to accommodate hearing impaired employees. **[F]**

907.9.2 Audible alarms. Audible alarm notification appliances shall be provided and shall sound a distinctive sound that is not to be used for

any purpose other than that of a fire alarm. The audible alarm notification appliances shall provide a sound pressure level of 15 decibels (dBA) above the average ambient sound level or 5 dBA above the maximum sound level having a duration of at least 60 seconds, whichever is greater, in every occupied space within the building. The minimum sound pressure levels shall be: 70 dBA in occupancies in Groups R and I-1; 90 dBA in mechanical equipment rooms and 60 dBA in other occupancies. The maximum sound pressure level for audible alarm notification appliances shall be 120 dBA at the minimum hearing distance from the audible appliance. Where the average ambient noise is greater than 105 dBA, visible alarm notification appliances shall be provided in accordance with NFPA 72 and audible alarm notification appliances shall not be required. **[F]**

Exception: Visible alarm notification appliances shall be allowed in lieu of audible alarm notification appliances in critical-care areas of Group I-2 occupancies.

907.10 Fire safety functions. Automatic fire detectors utilized for the purpose of performing fire safety functions shall be connected to the building's fire alarm control panel where a fire alarm system is required by Section 907.2. Detectors shall, upon actuation, perform the intended function and activate the alarm notification appliances or a visible and audible supervisory signal at a constantly attended location. In buildings not required to be equipped with a fire alarm system, the automatic fire detector shall be powered by normal electrical service and, upon actuation, perform the intended function. The detectors shall be located in accordance with NFPA 72. **[F]**

907.11 Duct smoke detectors. Duct smoke detectors shall be connected to the building's fire alarm control panel when a fire alarm system is provided. Activation of a duct smoke detector shall initiate a visible and audible supervisory signal at a constantly attended location. Duct smoke detectors shall not be used as a substitute for required open-area detection. **[F]**

Exceptions:

1. The supervisory signal at a constantly attended location is not required where duct smoke detectors activate the building's alarm notification appliances.
2. In occupancies not required to be equipped with a fire alarm system, actuation of a smoke detector shall activate a visible and audible signal in an approved location. Smoke detector trouble conditions shall activate a visible or audible signal in an approved location and shall be identified as air duct detector trouble.

907.12 Access. Access shall be provided to each detector for periodic inspection, maintenance and testing. **[F]**

907.13 Fire-extinguishing systems. Automatic fire-extinguishing systems shall be connected to the building fire alarm system where a fire alarm system is required by another section of this code or is otherwise installed. **[F]**

907.14 Monitoring. Fire alarm systems required by this chapter or the *Fire Code of New York State* shall be monitored by an approved supervising station in accordance with NFPA 72. **[F]**

Exception: Supervisory service is not required for:

1. Single- and multiple-station smoke alarms required by Section 907.2.10.
2. Smoke detectors in Group I-3 occupancies.
3. Automatic sprinkler systems in one- and two-family dwellings.

907.15 Automatic telephone-dialing devices. Automatic telephone-dialing devices used to transmit an emergency alarm shall not be connected to any fire department telephone number unless approved by the fire chief. **[F]**

		907.16 Acceptance tests. Upon completion of the installation of the fire alarm system, alarm notification appliances and circuits, alarm-initiating devices and circuits, supervisory-signal initiating devices and circuits, signaling line circuits, and primary and secondary power supplies shall be tested in accordance with NFPA 72. **[F]** **907.17 Record of completion.** A record of completion in accordance with NFPA 72 verifying that the system has been installed in accordance with the approved plans and specifications shall be provided. **[F]** **907.18 Instructions.** Operating, testing and maintenance instructions, and record drawings ("as builts") and equipment specifications shall be provided at an approved location. [F] **907.19 Inspection, testing and maintenance.** The maintenance and testing schedules and procedures for fire alarm and fire detection systems shall be in accordance with the *Fire Code of New York State.* **[F]**
24	912	**SECTION 912 FIRE DEPARTMENT CONNECTIONS** **912.1 Installation.** Fire department connections shall be installed in accordance with the NFPA standard applicable to the system design and shall comply with Sections 912.2 through 912.5. **[F]** **912.2 Location.** With respect to hydrants, driveways, buildings and landscaping, fire department connections shall be so located that fire apparatus and hose connected to supply the system will not obstruct access to the buildings for other fire apparatus. The location of fire department connections shall be approved. **[F]** **912.2.1 Visible location.** Fire department connections shall be located on the street side of buildings, fully visible and recognizable from the street or nearest point of fire department vehicle access or as otherwise approved by the code enforcement official. **[F]** **912.2.2 Existing buildings.** On existing buildings, wherever the fire department connection is not visible to approaching fire apparatus, the fire department connection shall be indicated by an approved sign mounted on the street front or on the side of the building. Such sign shall have the letters "FDC" at least 6 inches (152 mm) high and words in letters at least 2 inches (51 mm) high or an arrow to indicate the location. All such signs shall be subject to the approval of the code enforcement official. **[F]** **912.3 Access.** Immediate access to fire department connections shall be maintained at all times and without obstruction by fences, bushes, trees, walls or any other object for a minimum of 3 feet (914 mm). **[F]** **912.3.1 Locking fire department connection caps.** The code enforcement official is authorized to require locking caps on fire department connections for water-based fire protection systems where the responding fire department carries appropriate key wrenches for removal. **[F]** **912.4 Signs.** A metal sign with raised letters at least 1 inch (25 mm) in size shall be mounted on all fire department connections serving automatic sprinklers, standpipes or fire pump connections. Such signs shall read: AUTOMATIC SPRINKLERS, STANDPIPES or TEST CONNECTION, or a combination thereof as applicable. **[F]** **912.5 Backflow protection.** The potable water supply to automatic sprinkler and standpipe systems shall be protected against backflow as required by the *Plumbing Code of New York State.* **[P]**
25	1001.1 &2	**1001.1 General.** Buildings or portions thereof shall be provided with a means of egress system as required by this chapter. The provisions of this chapter shall control the design, construction and arrangement of means of egress components required to provide an approved means of egress from structures and portions thereof.

PASSERO ASSOCIATES
engineering architecture

<table>
<tr><td></td><td></td><td>1001.2 Minimum requirements. It shall be unlawful to alter a building or structure in a manner that will reduce the number of exits or the capacity of the means of egress to less than required by this code.</td></tr>
<tr><td>26</td><td>1004 & Table 1004.1.1</td><td>SECTION 1004 OCCUPANT LOAD

1004.1 Design occupant load. In determining means of egress requirements, the number of occupants for whom means of egress facilities shall be provided shall be determined in accordance with this section. Where occupants from accessory areas egress through a primary space, the calculated occupant load for the primary space shall include the total occupant load of the primary space plus the number of occupants egressing through it from the accessory area.

1004.1.1 Areas without fixed seating. The number of occupants shall be computed at the rate of one occupant per unit of area as prescribed in Table 1004.1.1. For areas without fixed seating, the occupant load shall not be less than that number determined by dividing the floor area under consideration by the occupant per unit of area factor assigned to the occupancy as set forth in Table 1004.1.1. Where an intended use is not listed in Table 1004.1.1, the code enforcement official shall establish a use based on a listed use that most nearly resembles the intended use.

TABLE 1004.1.1 MAXIMUM FLOOR AREA ALLOWANCES PER OCCUPANT

<table>
<tr><th>FUNCTION OF SPACE</th><th>FLOOR AREA IN SQ. FT. PER OCCUPANT</th></tr>
<tr><td>Accessory storage areas, mechanical equipment room</td><td>300 gross</td></tr>
<tr><td>Assembly without fixed seats
Concentrated (chairs only—not fixed)
Standing space
Unconcentrated (tables and chairs)</td><td>
7 net
5 net
15 net</td></tr>
<tr><td>Business areas</td><td>100 gross</td></tr>
<tr><td>Locker rooms</td><td>50 gross</td></tr>
<tr><td>Mercantile
Areas on other floors
Basement and grade floor areas
Storage, stock, shipping areas</td><td>
60 gross
30 gross
300 gross</td></tr>
</table>

1004.2 Increased occupant load. The occupant load permitted in any building, or portion thereof, is permitted to be increased from that number established for the occupancies in Table 1004.1.1, provided that all other requirements of the code are also met based on such modified number and the occupant load does not exceed one occupant per 7 square feet (0.65 m²) of occupiable floor space. Where required by the code enforcement official, an approved aisle, seating or fixed equipment diagram substantiating any increase in occupant load shall be submitted. Where required by the code enforcement official, such diagram shall be posted.

1004.3 Posting of occupant load. Every room or space that is an assembly occupancy shall have the occupant load of the room or space posted in a conspicuous place, near the main exit or exit access doorway from the room or space. Posted signs shall be of an approved legible permanent design and shall be maintained by the owner or authorized agent.</td></tr>
</table>

PASSERO ASSOCIATES
engineering architecture

28	1007.1	**1007.1 Accessible means of egress required.** Accessible means of egress shall comply with this section. Accessible spaces shall be provided with not less than one accessible means of egress. Where more than one means of egress is required by Section 1015.1 or 1019.1 from any accessible space, each accessible portion of the space shall be served by not less than two accessible means of egress. **Exceptions:** 1. One accessible means of egress is required from an accessible mezzanine level in accordance with Section 1007.3, 1007.4 or 1007.5. 2. In assembly spaces with sloped floors, one accessible means of egress is required from a space where the common path of travel of the accessible route for access to the wheelchair spaces meets the requirements in Section 1025.8.
29	1008	**SECTION 1008 DOORS, GATES AND TURNSTILES** **1008.1 Doors.** Means of egress doors shall meet the requirements of this section. Doors serving a means of egress system shall meet the requirements of this section and Section 1018.2. Doors provided for egress purposes in numbers greater than required by this code shall meet the requirements of this section. Means of egress doors shall be readily distinguishable from the adjacent construction and finishes such that the doors are easily recognizable as doors. Mirrors or similar reflecting materials shall not be used on means of egress doors. Means of egress doors shall not be concealed by curtains, drapes, decorations or similar materials. **1008.1.1 Size of doors.** The minimum width of each door opening shall be sufficient for the occupant load thereof and shall provide a clear width of not less than 32 inches (813 mm). Clear openings of doorways with swinging doors shall be measured between the face of the door and the stop, with the door open 90 degrees (1.57 rad). Where this section requires a minimum clear width of 32 inches (813 mm) and a door opening includes two door leaves without a mullion, one leaf shall provide a clear opening width of 32 inches (813 mm). The maximum width of a swinging door leaf shall be 48 inches (1219 mm) nominal. Means of egress doors in a Group I-2 occupancy used for the movement of beds shall provide a clear width not less than 41.5 inches (1054 mm). The height of doors shall not be less than 80 inches (2032 mm). **Exceptions:** 3. Door openings to storage closets less than 10 square feet (0.93 m²) in area shall not be limited by the minimum width. 8. Door openings required to be accessible within Type B units shall have a minimum clear width of 32 inches (813 mm). **1008.1.1.1 Projections into clear width.** There shall not be projections into the required clear width lower than 34 inches (864 mm) above the floor or ground. Projections into the clear opening width between 34 inches (864 mm) and 80 inches (2032 mm) above the floor or ground shall not exceed 4 inches (102 mm). **1008.1.2 Door swing.** Egress doors shall be side-hinged swinging. **Exceptions:** 1. Private garages, office areas, factory and storage areas with an occupant load of 10 or less. 6. In other than Group H occupancies, horizontal sliding doors complying with Section 1008.1.3.3 are permitted in a means of egress. 7. Power-operated doors in accordance with Section 1008.1.3.2. Doors shall swing in the direction of egress travel where serving an occupant load of 50 or more persons or a Group H occupancy.

The opening force for interior side-swinging doors without closers shall not exceed a 5-pound (22 N) force. For other side-swinging, sliding and folding doors, the door latch shall release when subjected to a 15-pound (67 N) force. The door shall be set in motion when subjected to a 30-pound (133 N) force. The door shall swing to a full-open position when subjected to a 15-pound (67 N) force. Forces shall be applied to the latch side.

1008.1.3 Special doors. Special doors and security grilles shall comply with the requirements of Sections 1008.1.3.1 through 1008.1.3.5.

1008.1.3.2 Power-operated doors. Where means of egress doors are operated by power, such as doors with a photoelectric-actuated mechanism to open the door upon the approach of a person, or doors with power-assisted manual operation, the design shall be such that in the event of power failure, the door is capable of being opened manually to permit means of egress travel or closed where necessary to safeguard means of egress. The forces required to open these doors manually shall not exceed those specified in Section 1008.1.2, except that the force to set the door in motion shall not exceed 50 pounds (220 N). The door shall be capable of swinging from any position to the full width of the opening in which such door is installed when a force is applied to the door on the side from which egress is made. Full-power-operated doors shall comply with BHMA A156.10. Power-assisted and low-energy doors shall comply with BHMA A156.19.

Exceptions:

2. Horizontal sliding doors complying with Section 1008.1.3.3.
3. For a biparting door in the emergency breakout mode, a door leaf located within a multiple-leaf opening shall be exempt from the minimum 32-inch (813 mm) single-leaf requirement of Section 1008.1.1, provided a minimum 32-inch (813 mm) clear opening is provided when the two biparting leaves meeting in the center are broken out.

1008.1.3.4 Access-controlled egress doors. The entrance doors in a means of egress in buildings with an occupancy in Group A, B, E, M, R-1 or R-2 and entrance doors to tenant spaces in occupancies in Groups A, B, E, M, R-1 and R-2 are permitted to be equipped with an approved entrance and egress access control system which shall be installed in accordance with all of the following criteria:

1. A sensor shall be provided on the egress side arranged to detect an occupant approaching the doors. The doors shall be arranged to unlock by a signal from or loss of power to the sensor.
2. Loss of power to that part of the access control system which locks the doors shall automatically unlock the doors.
3. The doors shall be arranged to unlock from a manual unlocking device located 40 inches to 48 inches (1016 mm to 1219 mm) vertically above the floor and within 5 feet (1524 mm) of the secured doors. Ready access shall be provided to the manual unlocking device and the device shall be clearly identified by a sign that reads "PUSH TO EXIT." When operated, the manual unlocking device shall result in direct interruption of power to the lock-independent of the access control system electronics-and the doors shall remain unlocked for a minimum of 30 seconds.
4. Activation of the building fire alarm system, if provided, shall automatically unlock the doors, and the doors shall remain unlocked until the fire alarm system has been reset.
5. Activation of the building automatic sprinkler or fire detection system, if provided, shall automatically unlock the doors. The doors shall remain unlocked until the fire alarm system has been reset.
6. Entrance doors in buildings with an occupancy in Group A, B, E or M shall not be secured from the egress side during periods that the building is open to the general public.

1008.1.3.5 Security grilles. In Groups B, F, M and S, horizontal sliding or vertical security grilles are permitted at the main exit and shall be openable from the inside without the use of a key or special knowledge or effort during periods that the space is occupied. The grilles shall remain secured in the full-open position during the period of occupancy by the general public. Where two or more means of egress are required, not more than one-half of the exits or exit access doorways shall be equipped with horizontal sliding or vertical security grilles.

1008.1.4 Floor elevation. There shall be a floor or landing on each side of a door. Such floor or landing shall be at the same elevation on each side of the door. Landings shall be level except for exterior landings, which are permitted to have a slope not to exceed 0.25 unit vertical in 12 units horizontal (2-percent slope).

Exceptions:
2. Exterior doors as provided for in Section 1003.5, Exception 1, and Section 1018.2, which are not on an accessible route.
4. Variations in elevation due to differences in finish materials, but not more than 0.5 inch (12.7 mm).

1008.1.5 Landings at doors. Landings shall have a width not less than the width of the stairway or the door, whichever is greater. Doors in the fully open position shall not reduce a required dimension by more than 7 inches (178 mm). When a landing serves an occupant load of 50 or more, doors in any position shall not reduce the landing to less than one-half its required width. Landings shall have a length measured in the direction of travel of not less than 44 inches (1118 mm).

1008.1.6 Thresholds. Thresholds at doorways shall not exceed 0.75 inch (19.1 mm) in height for sliding doors serving dwelling units or 0.5 inch (12.7 mm) for other doors. Raised thresholds and floor level changes greater than 0.25 inch (6.4 mm) at doorways shall be beveled with a slope not greater than one unit vertical in two units horizontal (50-percent slope).

1008.1.7 Door arrangement. Space between two doors in a series shall be 48 inches (1219 mm) minimum plus the width of a door swinging into the space. Doors in a series shall swing either in the same direction or away from the space between the doors.

1008.1.8 Door operations. Except as specifically permitted by this section egress doors shall be readily openable from the egress side without the use of a key or special knowledge or effort.
1008.1.8.1 Hardware. Door handles, pulls, latches, locks and other operating devices on doors required to be accessible by Chapter 11 shall not require tight grasping, tight pinching or twisting of the wrist to operate.
1008.1.8.2 Hardware height. Door handles, pulls, latches, locks and other operating devices shall be installed 34 inches (864 mm) minimum and 48 inches (1219 mm) maximum above the finished floor. Locks used only for security purposes and not used for normal operation are permitted at any height.

Exception: Access doors or gates in barrier walls and fences protecting pools, spas and hot tubs shall be permitted to have operable parts of the release of latch on self-latching devices at 54 inches (1370 mm) maximum above the finished floor or ground, provided the self-latching devices are not also self-locking devices operated by means of a key, electronic opener or integral combination lock.
1008.1.8.3 Locks and latches. Locks and latches shall be permitted to prevent operation of doors where any of the following exists:
1. Places of detention or restraint.
2. In buildings in occupancy Group A having an occupant load of 300 or less, Groups B, F, M and S, and in places of religious worship, the main exterior door or doors are permitted to be equipped with key-operated locking devices from the egress side provided:
2.1. The locking device is readily distinguishable as locked,
2.2. A readily visible durable sign is posted on the egress side on or adjacent to the door stating: THIS DOOR TO REMAIN UNLOCKED WHEN BUILDING IS OCCUPIED. The sign shall be in letters 1 inch (25 mm) high on a contrasting background,
2.3. The use of the key-operated locking device is revokable by the code enforcement official for due cause.
3. Where egress doors are used in pairs, approved automatic flush bolts shall be permitted to be used, provided that the door leaf having the automatic flush bolts has no doorknob or surface-mounted hardware.
4. Doors from individual dwelling or sleeping units of Group R occupancies having an occupant load of 10 or less are permitted to be equipped with a night latch, dead bolt or security chain, provided such devices are openable from the inside without the use of a key or tool.
1008.1.8.4 Bolt locks. Manually operated flush bolts or surface bolts are not permitted.

Exceptions:

		1. On doors not required for egress in individual dwelling units or sleeping units. 2. Where a pair of doors serves a storage or equipment room, manually operated edge- or surface-mounted bolts are permitted on the inactive leaf. **1008.1.8.5 Unlatching.** The unlatching of any door or leaf shall not require more than one operation. **Exceptions:** 1. Places of detention or restraint. 2. Where manually operated bolt locks are permitted by Section 1008.1.8.4. 3. Doors with automatic flush bolts as permitted by Section 1008.1.8.3, Exception 3. 4. Doors from individual dwelling units and sleeping units of Group R occupancies as permitted by Section 1008.1.8.3, Exception 4. **1008.1.8.6 Delayed egress locks.** Approved, listed, delayed egress locks shall be permitted to be installed on doors serving any occupancy except Group A, E and H occupancies in buildings that are equipped throughout with an automatic sprinkler system in accordance with Section 903.3.1.1 or an approved automatic smoke or heat detection system installed in accordance with Section 907, provided that the doors unlock in accordance with Items 1 through 6 below. A building occupant shall not be required to pass through more than one door equipped with a delayed egress lock before entering an exit. 1. The doors unlock upon actuation of the automatic sprinkler system or automatic fire detection system. 2. The doors unlock upon loss of power controlling the lock or lock mechanism. 3. The door locks shall have the capability of being unlocked by a signal from the fire command center. 4. The initiation of an irreversible process which will release the latch in not more than 15 seconds when a force of not more than 15 pounds (67 N) is applied for 1 second to the release device. Initiation of the irreversible process shall activate an audible signal in the vicinity of the door. Once the door lock has been released by the application of force to the releasing device, relocking shall be by manual means only. **Exception:** Where approved, a delay of not more than 30 seconds is permitted. 5. A sign shall be provided on the door located above and within 12 inches (305 mm) of the release device reading: PUSH UNTIL ALARM SOUNDS. DOOR CAN BE OPENED IN 15 [30] SECONDS. 6. Emergency lighting shall be provided at the door. **1008.1.8.7 Stairway doors.** Interior stairway means of egress doors shall be openable from both sides without the use of a key or special knowledge or effort. **Exceptions:** 1. Stairway discharge doors shall be openable from the egress side and shall only be locked from the opposite side. 2. This section shall not apply to doors arranged in accordance with Section 403.12. 3. In stairways serving not more than four stories, doors are permitted to be locked from the side opposite the egress side, provided they are openable from the egress side and capable of being unlocked simultaneously without unlatching upon a signal from the fire command center, if present, or a signal by emergency personnel from a single location inside the main entrance to the building. **1008.1.9 Panic and fire exit hardware.** Where panic and fire exit hardware is installed, it shall comply with the following: 1. The actuating portion of the releasing device shall extend at least one-half of the door leaf width. 2. The maximum unlatching force shall not exceed 15 pounds (67 N). Electrical rooms with equipment rated 1,200 amperes or more and over 6 feet (1829 mm) wide that contain overcurrent devices, switching devices or control devices with exit access doors must be equipped with panic hardware and doors must swing in the direction of egress.

PASSERO ASSOCIATES
engineering architecture

<table>
<tr><td></td><td></td><td>If balanced doors are used and panic hardware is required, the panic hardware shall be the push-pad type and the pad shall not extend more then one-half the width of the door measured from the latch side.</td></tr>
<tr><td>33</td><td>1015</td><td>SECTION 1015 EXIT AND EXIT ACCESS DOORWAYS

1015.1 Exit or exit access doorways required. Two exits or exit access doorways from any space shall be provided where one of the following conditions exists:

1. The occupant load of the space exceeds the values in Table 1015.1.
2. The common path of egress travel exceeds the limitations of Section 1014.3.
3. Where required by Sections 1015.3, 1015.4 and 1015.5.

TABLE 1015.1 SPACES WITH ONE MEANS OF EGRESS

<table><tr><th>OCCUPANCY</th><th>MAXIMUM OCCUPANT LOAD</th></tr><tr><td>A, B,E[a], F, M, U</td><td>49</td></tr></table>
1015.1.1 Three or more exits. Access to three or more exits shall be provided from a floor area where required by Section 1019.1.
1015.2 Exit or exit access doorway arrangement. Required exits shall be located in a manner that makes their availability obvious. Exits shall be unobstructed at all times. Exit and exit access doorways shall be arranged in accordance with Sections 1015.2.1 and 1015.2.2.

1015.2.1 Two exits or exit access doorways. Where two exits or exit access doorways are required from any portion of the exit access, the exit doors or exit access doorways shall be placed a distance apart equal to not less than one-half of the length of the maximum overall diagonal dimension of the building or area to be served measured in a straight line between exit doors or exit access doorways. Interlocking or scissor stairs shall be counted as one exit stairway.

Exceptions:
1. Where exit enclosures are provided as a portion of the required exit and are interconnected by a 1-hour fire-resistance-rated corridor conforming to the requirements of Section 1017, the required exit separation shall be measured along the shortest direct line of travel within the corridor.
2. Where a building is equipped throughout with an automatic sprinkler system in accordance with Section 903.3.1.1 or 903.3.1.2, the separation distance of the exit doors or exit access doorways shall not be less than one-third of the length of the maximum overall diagonal dimension of the area served.
1015.2.2 Three or more exits or exit access doorways. Where access to three or more exits is required, at least two exit doors or exit access doorways shall be arranged in accordance with the provisions of Section 1015.2.1.</td></tr>
<tr><td>34</td><td>1017.1</td><td>1017.1 Construction. Corridors shall be fire-resistance rated in accordance with Table 1017.1. The corridor walls required to be fire-resistance rated shall comply with Section 708 for fire partitions.

TABLE 1017.1 CORRIDOR FIRE-RESISTANCE RATING</td></tr>
</table>

PASSERO ASSOCIATES
engineering architecture

			OCCUPANCY	OCCUPANT LOAD SERVED BY CORRIDOR	REQUIRED FIRE-RESISTANCE RATING (hours) Without sprinkler system
			A, B, E, F, M, S, U	Greater than 30	1
39	1021	**SECTION 1021 EXIT PASSAGEWAYS** **1021.1 Exit passageway.** Exit passageways serving as an exit component in a means of egress system shall comply with the requirements of this section. An exit passageway shall not be used for any purpose other than as a means of egress. **1021.2 Width.** The width of exit passageways shall be determined as specified in Section 1005.1 but such width shall not be less than 44 inches (1118 mm), except that exit passageways serving an occupant load of less than 50 shall not be less than 36 inches (914 mm) in width. The required width of exit passageways shall be unobstructed. **Exception:** Doors, when fully opened, and handrails, shall not reduce the required width by more than 7 inches (178 mm). Doors in any position shall not reduce the required width by more than one-half. Other nonstructural projections such as trim and similar decorative features are permitted to project into the required width 1.5 inches (38 mm) on each side. **1021.3 Construction.** Exit passageway enclosures shall have walls, floors and ceilings of not less than 1-hour fire-resistance rating, and not less than that required for any connecting exit enclosure. Exit passageways shall be constructed as fire barriers in accordance with Section 706. **1021.4 Openings and penetrations.** Exit passageway opening protectives shall be in accordance with the requirements of Section 715. Except as permitted in Section 402.4.6, openings in exit passageways other than unexposed exterior openings shall be limited to those necessary for exit access to the exit passageway from normally occupied spaces and for egress from the exit passageway. Where interior exit enclosures are extended to the exterior of a building by an exit passageway, the door assembly from the exit enclosure to the exit passageway shall be protected by a fire door conforming to the requirements in Section 715.4. Fire door assemblies in exit passageways shall comply with Section 715.4.4. Elevators shall not open into an exit passageway. **1021.5 Penetrations.** Penetrations into and openings through an exit passageway are prohibited except for required exit doors, equipment and ductwork necessary for independent pressurization, sprinkler piping, standpipes, electrical raceway for fire department communication and electrical raceway serving the exit passageway and terminating at a steel box not exceeding 16 square inches (0.010 m²). Such penetrations shall be protected in accordance with Section 712. There shall be no penetrations or communicating openings, whether protected or not, between adjacent exit passageways.			
43	1101.1-1110 & ICC/A117.1(03)	**SECTION 1101 GENERAL** **1101.1 Scope.** The provisions of this chapter shall control the design and construction of facilities for accessibility to physically disabled persons. **1101.2 Design.** Buildings and facilities shall be designed and constructed to be accessible in accordance with this code and ICC/ANSI A117.1.			

PASSERO ASSOCIATES
engineering architecture

SECTION 1103 SCOPING REQUIREMENTS

1103.1 Where required. Sites, buildings, structures, facilities, elements and spaces, temporary or permanent, shall be accessible to persons with physical disabilities.

1103.2 General exceptions. Sites, buildings, structures, facilities, elements and spaces shall be exempt from this chapter to the extent specified in this section.

1103.2.1 Specific requirements. Accessibility is not required in buildings and facilities, or portions thereof, to the extent permitted by Sections 1104 through 1110.
1103.2.2 Existing buildings. Existing buildings shall comply with the *Existing Building Code of New York State.*
1103.2.3 Employee work areas. Spaces and elements within employee work areas shall only be required to comply with Sections 907.9.1.2, 1007 and 1104.3.1 and shall be designed and constructed so that individuals with disabilities can approach, enter and exit the work area. Work areas, or portions of work areas, that are less than 150 square feet (14 m^2) in area and elevated 7 inches (178 mm) or more above the ground or finish floor where the elevation is essential to the function of the space shall be exempt from all requirements.
1103.2.6 Construction sites. Structures, sites and equipment directly associated with the actual processes of construction including, but not limited to, scaffolding, bridging, materials hoists, materials storage or construction trailers are not required to be accessible.
1103.2.7 Raised areas. Raised areas used primarily for purposes of security, life safety or fire safety including, but not limited to, observation galleries, prison guard towers, fire towers or lifeguard stands are not required to be accessible or to be served by an accessible route.
1103.2.8 Limited access spaces. Nonoccupiable spaces accessed only by ladders, catwalks, crawl spaces, freight elevators or very narrow passageways are not required to be accessible.
1103.2.9 Equipment spaces. Spaces frequented only by personnel for maintenance, repair or monitoring of equipment are not required to be accessible. Such spaces include, but are not limited to, elevator pits, elevator penthouses, mechanical, electrical or communications equipment rooms, piping or equipment catwalks, water or sewage treatment pump rooms and stations, electric substations and transformer vaults, and highway and tunnel utility facilities.

SECTION 1104 ACCESSIBLE ROUTE

1104.1 Site arrival points. Accessible routes within the site shall be provided from public transportation stops; accessible parking; accessible passenger loading zones; and public streets or sidewalks to the accessible building entrance served.

Exception: Other than in buildings or facilities containing or serving Type B units, an accessible route shall not be required between site arrival points and the building or facility entrance if the only means of access between them is a vehicular way not providing for pedestrian access.

1104.2 Within a site. At least one accessible route shall connect accessible buildings, accessible facilities, accessible elements and accessible spaces that are on the same site.

Exception: An accessible route is not required between accessible buildings, accessible facilities, accessible elements and accessible spaces that have, as the only means of access between them, a vehicular way not providing for pedestrian access.

1104.3 Connected spaces. When a building or portion of a building is required to be accessible, an accessible route shall be provided to each portion of the building, to accessible building entrances connecting accessible pedestrian walkways and the public way.

Exception: In assembly areas with fixed seating required to be accessible, an accessible route shall not be required to serve fixed seating where wheelchair spaces or designated aisle seats required to be on an accessible route are not provided.

1104.3.1 Employee work areas. Common use circulation paths within employee work areas shall be accessible routes.

Exceptions:
1. Common use circulation paths, located within employee work areas that are less than 300 square feet (27.9 m^2) in size and defined by permanently installed partitions, counters, casework or furnishings, shall not be required to be accessible routes.
2. Common use circulation paths, located within employee work areas, that are an integral component of equipment, shall not be required to be accessible routes.
3. Common use circulation paths, located within exterior employee work areas that are fully exposed to the weather, shall not be required to be accessible routes.

1104.5 Location. Accessible routes shall coincide with or be located in the same area as a general circulation path. Where the circulation path is interior, the accessible route shall also be interior. Where only one accessible route is provided, the accessible route shall not pass through kitchens, storage rooms, restrooms, closets or similar spaces.

1104.6 Security barriers. Security barriers including, but not limited to, security bollards and security check points shall not obstruct a required accessible route or accessible means of egress.

Exception: Where security barriers incorporate elements that cannot comply with these requirements, such as certain metal detectors, fluoroscopes or other similar devices, the accessible route shall be permitted to be provided adjacent to security screening devices. The accessible route shall permit persons with disabilities passing around security barriers to maintain visual contact with their personal items to the same extent provided others passing through the security barrier.

SECTION 1105 ACCESSIBLE ENTRANCES

1105.1 Public entrances. In addition to accessible entrances required by Sections 1105.1.1 through 1105.1.6, at least 60 percent of all public entrances shall be accessible.

Exceptions:

1. An accessible entrance is not required to areas not required to be accessible.
2. Loading and service entrances that are not the only entrance to a tenant space.

1105.1.3 Restricted entrances. Where restricted entrances are provided to a building or facility, at least one restricted entrance to the building or facility shall be accessible.

1105.1.5 Service entrances. If a service entrance is the only entrance to a building or a tenant space in a facility, that entrance shall be accessible.

SECTION 1106 PARKING AND PASSENGER LOADING FACILITIES

PASSERO ASSOCIATES
engineering architecture

1106.1 Required. Where parking is provided, accessible parking spaces shall be provided in compliance with Table 1106.1, except as required by Sections 1106.2 through 1106.4. Where more than one parking facility is provided on a site, the number of parking spaces required to be accessible shall be calculated separately for each parking facility.

Exception: This section does not apply to parking spaces used exclusively for buses, trucks, other delivery vehicles, law enforcement vehicles or vehicular impound and motor pools where lots accessed by the public are provided with an accessible passenger loading zone.

TABLE 1106.1 ACCESSIBLE PARKING SPACES

TOTAL PARKING SPACES PROVIDED	REQUIRED MINIMUM NUMBER OF ACCESSIBLE SPACES
1 to 25	1
26 to 50	2
51 to 75	3
76 to 100	4
101 to 150	5
151 to 200	6
201 to 300	7
301 to 400	8
401 to 500	9
501 to 1,000	2% of total
1,001 and over	20, plus one for each 100, or fraction thereof, over 1,000

1106.1.1 Access aisles. Accessible parking spaces shall be in conformance with ICC/ANSI A117.1 except that spaces shall be provided with access aisles at least 8 feet (2440 mm) in width.

1106.3 Hospital outpatient facilities. Ten percent of patient and visitor parking spaces provided to serve hospital outpatient facilities shall be accessible.

1106.4 Rehabilitation facilities and outpatient physical therapy facilities. Twenty percent, but not less than one, of the portion of patient and visitor parking spaces serving rehabilitation facilities and outpatient physical therapy facilities shall be accessible.

1106.5 Signage. Each accessible parking space shall be provided with signage displaying the international symbol of accessibility. Each access aisle shall be provided with signage reading "NO PARKING ANYTIME". Signs shall be permanently installed at a clear height of between 60 inches (1525 mm) and 84 inches (2185 mm) above grade and shall not interfere with an accessible route from an access aisle.

1106.6 Location. Accessible parking spaces shall be located on the shortest accessible route of travel from adjacent parking to an accessible building entrance. In parking facilities that do not serve a particular building, accessible parking spaces shall be located on the shortest route to an accessible pedestrian entrance to the parking facility. Where buildings have multiple accessible entrances with adjacent parking, accessible parking spaces shall be dispersed and located near the accessible entrances.

Exceptions:

2. Accessible parking spaces shall be permitted to be located in different parking facilities if substantially equivalent or greater accessibility is provided in terms of distance from an accessible entrance or entrances, parking fee and user convenience.

1106.7 Passenger loading zones. Passenger loading zones shall be designed and constructed in accordance with ICC/ANSI A117.1.

1106.7.1 Continuous loading zones. Where passenger loading zones are provided, one passenger loading zone in every continuous 100 linear feet (30.4 m) maximum of loading zone space shall be accessible.
1106.7.2 Medical facilities. A passenger loading zone shall be provided at an accessible entrance to licensed medical and long-term care facilities where people receive physical or medical treatment or care and where the period of stay exceeds 24 hours.
1106.7.3 Valet parking. A passenger loading zone shall be provided at valet parking services.

SECTION 1109 OTHER FEATURES AND FACILITIES

1109.1 General. Accessible building features and facilities shall be provided in accordance with Sections 1109.2 through 1109.14.

1109.2 Toilet and bathing facilities. Toilet rooms and bathing facilities shall be accessible. Where a floor level is not required to be connected by an accessible route, the only toilet rooms or bathing facilities provided within the facility shall not be located on the inaccessible floor. At least one of each type of fixture, element, control or dispenser in each accessible toilet room and bathing facility shall be accessible.

Exceptions:

1. In toilet rooms or bathing facilities accessed only through a private office, not for common or public use and intended for use by a single occupant, any of the following alternatives are allowed:
1.1. Doors are permitted to swing into the clear floor space, provided the door swing can be reversed to meet the requirements in ICC/ANSI A117.1;
1.2 The height requirements for the water closet in ICC/ANSI A117.1 are not applicable;
1.3. Grab bars are not required to be installed in a toilet room, provided that reinforcement has been installed in the walls and located so as to permit the installation of such grab bars; and
1.4. The requirement for height, knee and toe clearance shall not apply to a lavatory.
2. This section is not applicable to toilet and bathing facilities that serve dwelling units or sleeping units that are not required to be accessible by Section 1107.
3. Where multiple single-user toilet rooms or bathing facilities are clustered at a single location, at least 50 percent but not less than one room for each use at each cluster shall be accessible.
4. Where no more than one urinal is provided in a toilet room or bathing facility, the urinal is not required to be accessible.
5. Toilet rooms that are part of critical care or intensive care patient sleeping rooms are not required to be accessible.
1109.2.1 Unisex toilet and bathing rooms. In assembly and mercantile occupancies, an accessible unisex toilet room shall be provided where an aggregate of six or more male and female water closets is required. In buildings of mixed occupancy, only those water closets required for the assembly or mercantile occupancy shall be used to determine the unisex toilet room requirement. In recreational facilities where separate-sex bathing rooms are provided, an accessible unisex bathing room shall be provided. Fixtures located within unisex toilet and bathing rooms shall be included in determining the number of fixtures provided in an occupancy.

Exception: Where each separate-sex bathing room has only one shower or bathtub fixture, a unisex bathing room is not required.

1109.2.1.1 Standard. Unisex toilet and bathing rooms shall comply with Sections 1109.2.1.2 through 1109.2.1.7 and ICC/ANSI A117.1.
1109.2.1.2 Unisex toilet rooms. Unisex toilet rooms shall include only one water closet and only one lavatory. A unisex bathing room in accordance with Section 1109.2.1.3 shall be considered a unisex toilet room.

Exception: A urinal is permitted to be provided in addition to the water closet in a unisex toilet room.
1109.2.1.3 Unisex bathing rooms. Unisex bathing rooms shall include only one shower or bathtub fixture. Unisex bathing rooms shall also include one water closet and one lavatory. Where storage facilities are provided for separate-sex bathing rooms, accessible storage facilities shall be provided for unisex bathing rooms.
1109.2.1.4 Location. Unisex toilet and bathing rooms shall be located on an accessible route. Unisex toilet rooms shall be located not more than one story above or below separate-sex toilet rooms. The accessible route from any separate-sex toilet room to a unisex toilet room shall not exceed 500 feet (152 m).
1109.2.1.6 Clear floor space. Where doors swing into a unisex toilet or bathing room, a clear floor space not less than 30 inches by 48 inches (762 mm by 1219 mm) shall be provided, within the room, beyond the area of the door swing.
1109.2.1.7 Privacy. Doors to unisex toilet and bathing rooms shall be securable from within the room.
1109.2.2 Water closet compartment. Where water closet compartments are provided in a toilet room or bathing facility, at least one wheelchair-accessible compartment shall be provided. Where the combined total water closet compartments and urinals provided in a toilet room or bathing facility is six or more, at least one ambulatory-accessible water closet compartment shall be provided in addition to the wheelchair-accessible compartment. Wheelchair-accessible and ambulatory-accessible compartments shall comply with ICC/ANSI A117.1.

1109.3 Sinks. Where sinks are provided, at least 5 percent but not less than one provided in accessible spaces shall comply with ICC/ANSI A117.1.

Exception: Mop or service sinks are not required to be accessible.

1109.4 Kitchens and kitchenettes. Where kitchens and kitchenettes are provided in accessible spaces or rooms, they shall be accessible in accordance with ICC/ANSI A117.1.

1109.5 Drinking fountains. Where drinking fountains are provided on an exterior site, on a floor or within a secured area, the drinking fountains shall be provided in accordance with Sections 1109.5.1 and 1109.5.2.

1109.5.1 Minimum number. No fewer than two drinking fountains shall be provided. One drinking fountain shall comply with the requirements for people who use a wheelchair and one drinking fountain shall comply with the requirements for standing persons.

Exception: A single drinking fountain that complies with the requirements for people who use a wheelchair and standing persons shall be permitted to be substituted for two separate drinking fountains.
1109.5.2 More than the minimum number. Where more than the minimum number of drinking fountains specified in Section 1109.5.1 are provided, 50 percent of the total number of drinking fountains provided shall comply with the requirements for persons who use a wheelchair and 50 percent of the total number of drinking fountains provided shall comply with the requirements for standing persons.

Exception: Where 50 percent of the drinking fountains yields a fraction, 50 percent shall be permitted to be rounded up or down, provided that the total number of drinking fountains complying with this section equals 100 percent of the drinking fountains.

1109.8 Storage. Where fixed or built-in storage elements such as cabinets, shelves, medicine cabinets, closets and drawers are provided in required

accessible spaces, at least one of each type shall contain storage space complying with ICC/ANSI A117.1.

1109.8.1 Lockers. Where lockers are provided in accessible spaces, at least five percent, but not less than one, of each type shall be accessible.
1109.8.2 Shelving and display units. Self-service shelves and display units shall be located on an accessible route. Such shelving and display units shall not be required to comply with reach-range provisions.
1109.8.3 Coat hooks and shelves. Where coat hooks and shelves are provided in toilet rooms or toilet compartments or in dressing, fitting or locker rooms, at least one of each type shall be accessible and shall be provided in accessible toilet rooms without toilet compartments, accessible toilet compartments and accessible dressing, fitting and locker rooms.

1109.11 Seating at tables, counters and work surfaces. Where seating or standing space at fixed or built-in tables, counters or work surfaces is provided in accessible spaces, at least 5 percent of the seating and standing spaces, but not less than one, shall be accessible. In Group I-3 occupancy visiting areas at least 5 percent, but not less than one, cubicle or counter shall be accessible on both the visitor and detainee sides.

Exceptions:

1. Check-writing surfaces at check-out aisles not required to comply with Section 1109.12.2 are not required to be accessible.
1109.11.1 Dispersion. Accessible fixed or built-in seating at tables, counters or work surfaces shall be distributed throughout the space or facility containing such elements.

1109.12 Service facilities. Service facilities shall provide for accessible features in accordance with Sections 1109.12.1 through 1109.12.5.

1109.12.1 Dressing, fitting and locker rooms. Where dressing rooms, fitting rooms or locker rooms are provided, at least 5 percent, but not less than one, of each type of use in each cluster provided shall be accessible.
1109.12.2 Check-out aisles. Where check-out aisles are provided, accessible check-out aisles shall be provided in accordance with Table 1109.12.2. Where check-out aisles serve different functions, at least one accessible check-out aisle shall be provided for each function. Where checkout aisles serve different functions, accessible check-out aisles shall be provided in accordance with Table 1109.12.2 for each function. Where check-out aisles are dispersed throughout the building or facility, accessible check-out aisles shall also be dispersed. Traffic control devices, security devices and turnstiles located in accessible check-out aisles or lanes shall be accessible.

TABLE 1109.12.2 ACCESSIBLE CHECK-OUT AISLES

TOTAL CHECK-OUT AISLES OF EACH FUNCTION	MINIMUM NUMBER OF ACCESSIBLE CHECK-OUT AISLES OF EACH FUNCTION
1 to 4	1
5 to 8	2
9 to 15	3
Over 15	3, plus 20% of additional aisles

1109.12.3 Point of sale and service counters. Where counters are provided for sales or distribution of goods or services, at least one of each type provided shall be accessible. Where such counters are dispersed throughout the building or facility, accessible counters shall also be dispersed.
1109.12.5 Queue and waiting lines. Queue and waiting lines servicing accessible counters or check-out aisles shall be accessible.

1109.13 Controls, operating mechanisms and hardware. Controls, operating mechanisms and hardware intended for operation by the occupant, including switches that control lighting and ventilation and electrical convenience outlets, in accessible spaces, along accessible routes or as parts of accessible elements shall be accessible.

Exceptions:

1. Operable parts that are intended for use only by service or maintenance personnel shall not be required to be accessible.
2. Electrical or communication receptacles serving a dedicated use shall not be required to be accessible.
3. Where two or more outlets are provided in a kitchen above a length of counter top that is uninterrupted by a sink or appliance, one outlet shall not be required to be accessible.
4. Floor electrical receptacles shall not be required to be accessible.
5. HVAC diffusers shall not be required to be accessible.
6. Except for light switches, where redundant controls are provided for a single element, one control in each space shall not be required to be accessible.
7. Access doors or gates in barrier walls and fences protecting pools, spas and hot tubs shall be permitted to have operable parts of the release of latch on self-latching devices at 54 inches (1370 mm) maximum and 48 inches minimum above the finished floor or ground, provided the self-latching devices are not also self-locking devices, operated by means of a key, electronic opener, or integral combination lock.

1109.13.1 Operable window. Where operable windows are provided in rooms that are required to be accessible in accordance with Sections 1107.5.1.1, 1107.5.2.1, 1107.5.3.1, 1107.5.4, 1107.6.1.1, 1107.6.2.2.1 and 1107.6.4.1, at least one window in each room shall be accessible and each required operable window shall be accessible.

Exception: Accessible windows are not required in bathrooms or kitchens.

SECTION 1110 SIGNAGE

1110.1 Signs. Required accessible elements shall be identified by the International Symbol of Accessibility at the following locations:

1. Accessible parking spaces required by Section 1106.1 except where the total number of parking spaces provided is four or less.
2. Accessible passenger loading zones.
3. Accessible areas of refuge required by Section 1007.6.
4. Accessible rooms where multiple single-user toilet or bathing rooms are clustered at a single location.
5. Accessible entrances where not all entrances are accessible.
6. Accessible check-out aisles where not all aisles are accessible. The sign, where provided, shall be above the check-out aisle in the same location as the check-out aisle number or type of check-out identification.
7. Unisex toilet and bathing rooms.
8. Accessible dressing, fitting and locker rooms where not all such rooms are accessible.

1110.2 Directional signage. Directional signage indicating the route to the nearest like accessible element shall be provided at the following locations. These directional signs shall include the International Symbol of Accessibility.

1. Inaccessible building entrances.
2. Inaccessible public toilets and bathing facilities.
3. Elevators not serving an accessible route.

4. At each separate-sex toilet and bathing room indicating the location of the nearest unisex toilet or bathing room where provided in accordance with Section 1109.2.1.
5. At exits and elevators serving a required accessible space, but not providing an approved accessible means of egress, signage shall be provided in accordance with Section 1007.7.

1110.3 Other signs. Signage indicating special accessibility provisions shall be provided as shown:

1. Each assembly area required to comply with Section 1108.2.6 shall provide a sign notifying patrons of the availability of assistive listening systems.

Exception: Where ticket offices or windows are provided, signs are not required at each assembly area provided that signs are displayed at each ticket office or window informing patrons of the availability of assistive listening systems.
2. At each door to an egress stairway, exit passageway and exit discharge, signage shall be provided in accordance with Section 1011.3.
3. At areas of refuge, signage shall be provided in accordance with Sections 1007.6.3 through 1007.6.5.
4. At areas for assisted rescue, signage shall be provided in accordance with Section 1007.8.3.

ICC/A117.1

301 General

301.1 Scope. The provisions of Chapter 3 shall apply where required by the scoping provisions adopted by the administrative authority or by Chapters 4 through 10.

302 Floor Surfaces

302.1 General. Floor surfaces shall be stable, firm, and slip resistant, and shall comply with Section 302. Changes in level in floor surfaces shall comply with Section 303.

302.2 Carpet. Carpet or carpet tile shall be securely attached and shall have a firm cushion, pad, or backing or no cushion or pad. Carpet or carpet tile shall have a level loop, textured loop, level cut pile, or level cut/uncut pile texture. The pile shall be 1/2 inch (13 mm) maximum in height. Exposed edges of carpet shall be fastened to the floor and shall have trim along the entire length of the exposed edge. Carpet edge trim shall comply with Section 303.

Fig. 302.2 Carpet on Floor Surfaces

302.3 Openings. Openings in floor surfaces shall be of a size that does not permit the passage of a 1/2 inch (13 mm) diameter sphere, except as allowed in Sections 407.4.3, 408.4.3, 409.4.3, 410.4, and 805.10. Elongated openings shall be placed so that the long dimension is perpendicular to the dominant

direction of travel.

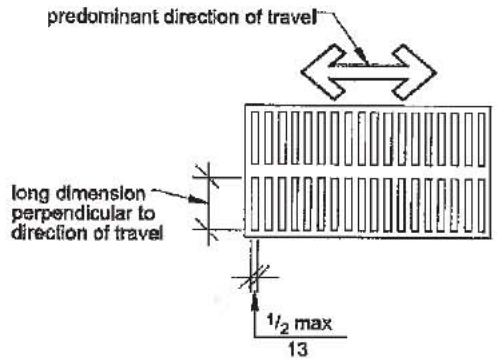

Fig. 302.3 Openings in Floor Surfaces

303 Changes in Level

303.1 General. Changes in level in floor surfaces shall comply with Section 303.

303.2 Vertical. Changes in level of 1/4 inch (6.4 mm) maximum in height shall be permitted to be vertical.

Fig. 303.2 Carpet on Floor Surfaces

303.3 Beveled. Changes in level greater than 1/4 inch (6.4 mm) in height and not more than 1/2 inch (13 mm) maximum in height shall be beveled with a slope not steeper than 1:2.

PASSERO ASSOCIATES
engineering architecture

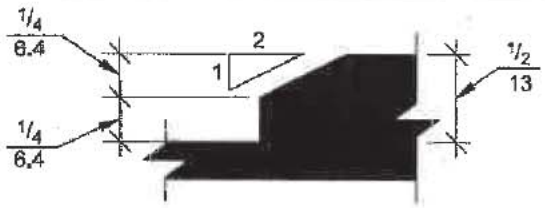

(a)

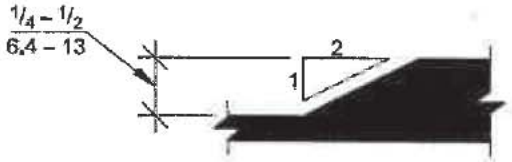

(b)

Fig. 303.3 Beveled Changes in Level

303.4 Ramped. Changes in level greater that 1/2 inch (13 mm) in height shall be ramped and shall comply with Section 405 or 406.

304 Turning Space

304.1 General. A turning space shall comply with Section 304.

304.2 Floor Surface. Floor surfaces of a turning space shall have a slope not steeper than 1:48 and shall comply with Section 302.

304.3 Size. Turning spaces shall comply with Section 304.3.1 or 304.3.2.

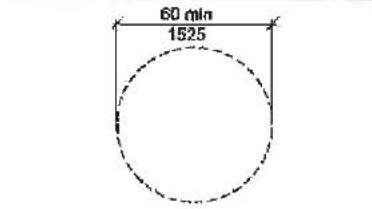

(a) Circular

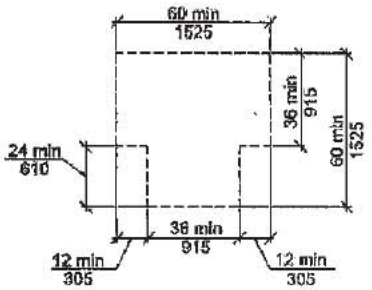

(b) T-shaped

Fig. 304.3 Size of Turning Space

304.3.1 Circular Space. The turning space shall be a circular space with a 60-inch (1525 mm) minimum diameter. The turning space shall be permitted to include knee and toe clearance complying with Section 306.

304.3.2 T-Shaped Space. The turning space shall be a T-shaped space within a 60-inch (1525 mm) minimum square, with arms and base 36 inches (915 mm) minimum in width. Each arm of the T shall be clear of obstructions 12 inches (305 mm) minimum in each direction, and the base shall be clear of obstructions 24 inches (610 mm) minimum. The turning space shall be permitted to include knee and toe clearance complying with Section 306 only at the end of either the base or one arm.

304.4 Door Swing. Unless otherwise specified, doors shall be permitted to swing into turning spaces.

305 Clear Floor Space

305.1 General. A clear floor space shall comply with Section 305.

305.2 Floor Surfaces. Floor surfaces of a clear floor space shall have a slope not steeper than 1:48 and shall comply with Section 302.

305.3 Size. The clear floor space shall be 48 inches (1220 mm) minimum in length and 30 inches (760 mm) minimum in width.

PASSERO ASSOCIATES
engineering architecture

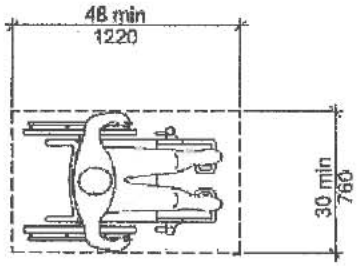

Fig. 305.3 Size of Clear Floor Space

305.4 Knee and Toe Clearance. Unless otherwise specified, clear floor space shall be permitted to include knee and toe clearance complying with Section 306.

305.5 Position. Unless otherwise specified, the clear floor space shall be positioned for either forward or parallel approach to an element.

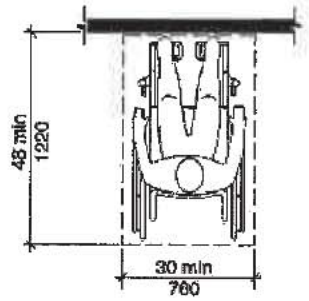

(a) Forward

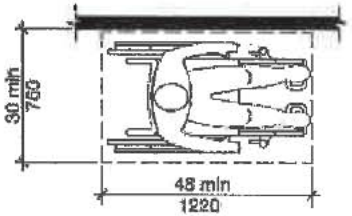

(b) Parallel

Fig. 305.5 Position of Clear Floor Space

305.6 Approach. One full, unobstructed side of the clear floor space shall adjoin or overlap an accessible route or adjoin another clear floor space.

305.7 Alcoves. If a clear floor space is in an alcove or otherwise confined on all or part of three sides, additional maneuvering clearances complying with Sections 305.7.1 and 305.7.2 shall be provided, as applicable.

PASSERO ASSOCIATES
engineering architecture

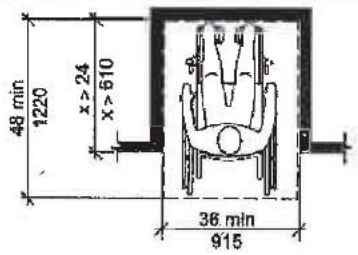

(a) Forward Approach

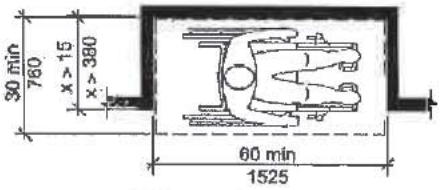

(b) Parallel Approach

Fig. 305.7 Maneuvering Clearance in an Alcove

305.7.1 Parallel Approach. Where the clear floor space is positioned for a parallel approach, the alcove shall be 60 inches (1525 mm) minimum in width where the depth exceeds 15 inches (380 mm).

305.7.2 Forward Approach. Where the clear floor space is positioned for a forward approach, the alcove shall be 36 inches (915 mm) minimum in width where the depth exceeds 24 inches (610 mm).

306 Knee and Toe Clearance

306.1 General. Where space beneath an element is included as part of clear floor space at an element, clearance at an element, or a turning space, the space shall comply with Section 306. Additional space beyond knee and toe clearance shall be permitted beneath elements.

306.2 Toe Clearance.

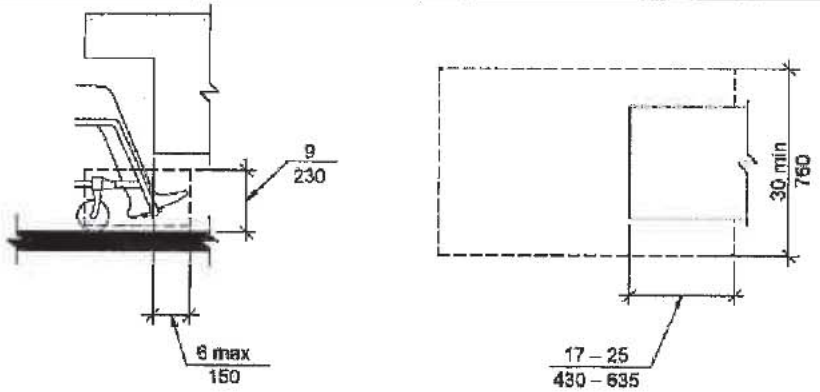

Fig. 306.2 Toe Clearance

306.2.1 General. Space beneath an element between the floor and 9 inches (230 mm) above the floor shall be considered toe clearance and shall comply with Section 306.2.

306.2.2 Maximum Depth. Toe clearance shall be permitted to extend 25 inches (635 mm) maximum under an element.

306.2.3 Minimum Depth. Where toe clearance is required at an element as part of a clear floor space, the toe clearance shall extend 17 inches (430 mm) minimum beneath the element.

306.2.4 Additional Clearance. Space extending greater than 6 inches (150 mm) beyond the available knee clearance at 9 inches (230 mm) above the floor shall not be considered toe clearance.

306.2.5 Width. Toe clearance shall be 30 inches (760 mm) minimum in width.

306.3 Knee Clearance.

PASSERO ASSOCIATES
engineering architecture

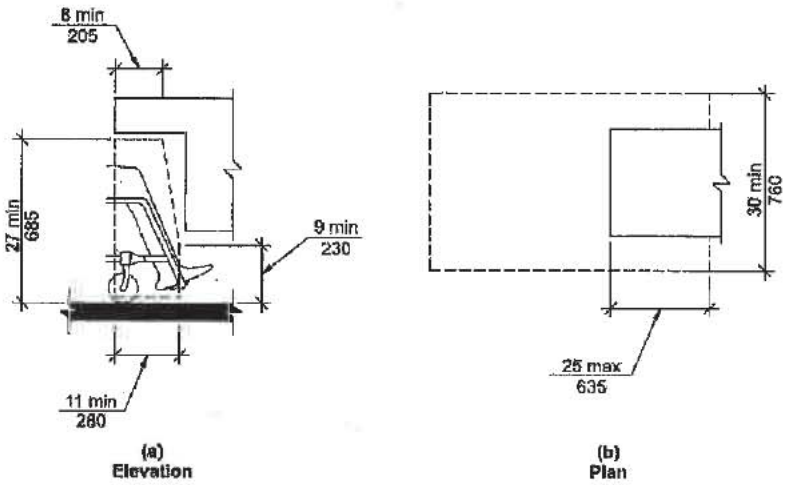

Fig. 306.3 Knee Clearance

306.3.1 General. Space beneath an element between 9 inches (230 mm) and 27 inches (685 mm) above the floor shall be considered knee clearance and shall comply with Section 306.3.

306.3.2 Maximum Depth. Knee clearance shall be permitted to extend 25 inches (635 mm) maximum under an element at 9 inches (230 mm) above the floor.

306.3.3 Minimum Depth. Where knee clearance is required beneath an element as part of a clear floor space, the knee clearance shall be 11 inches (280 mm) minimum in depth at 9 inches (230 mm) above the floor, and 8 inches (205 mm) minimum in depth at 27 inches (685 mm) above the floor.

306.3.4 Clearance Reduction. Between 9 inches (230 mm) and 27 inches (685 mm) above the floor, the knee clearance shall be permitted to be reduced at a rate of 1 inch (25 mm) for each 6 inches (150 mm) in height.

306.3.5 Width. Knee clearance shall be 30 inches (760 mm) minimum in width.

307 Protruding Objects

307.1 General. Protruding objects on circulation paths shall comply with Section 307.

307.2 Protrusion Limits. Objects with leading edges more than 27 inches (685 mm) and not more than 80 inches (2030 mm) above the floor shall protrude 4 inches (100 mm) maximum horizontally into the circulation path.

EXCEPTIONS:

PASSERO ASSOCIATES
engineering architecture

1. Handrails shall be permitted to protrude 4½ inches (115 mm) maximum.
2. Door closers and door stops shall be permitted to be 78 inches (1980 mm) minimum above the floor.

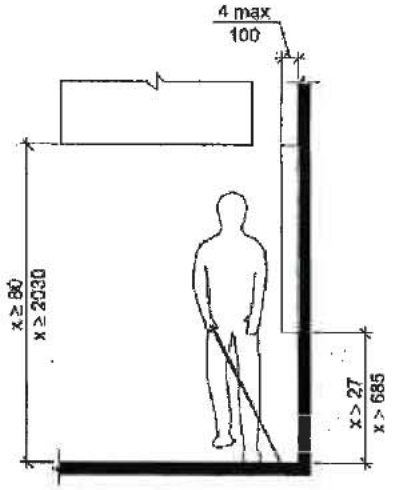

Fig. 307.2 Limits of Protruding Objects

307.3 Post-Mounted Objects. Objects on posts or pylons shall be permitted to overhang 4 inches (100 mm) maximum where more than 27 inches (685 mm) and not more than 80 inches (2030 mm) above the floor. Objects on multiple posts or pylons where the clear distance between the posts or pylons is greater than 12 inches (305 mm) shall have the lowest edge of such object either 27 inches (685 mm) maximum or 80 inches (2030 mm) minimum above the floor.

PASSERO ASSOCIATES
engineering architecture

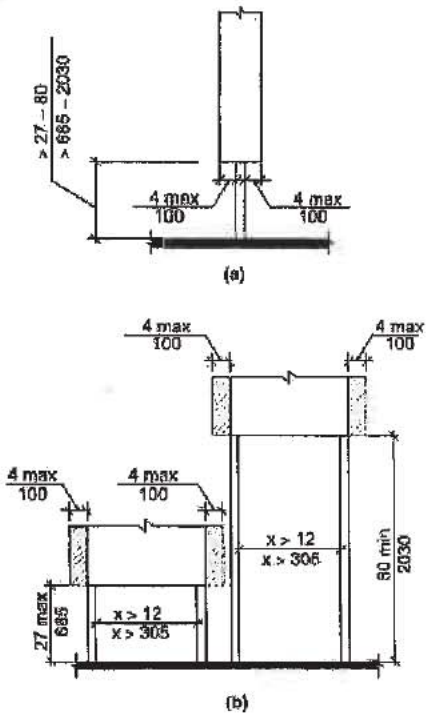

Fig. 307.3 Post-Mounted Protruding Objects

307.4 Reduced Vertical Clearance. Guardrails or other barriers shall be provided where object protrusion is beyond the limits allowed by Sections 307.2 and 307.3, and where the vertical clearance is less than 80 inches (2030 mm) above the floor. The leading edge of such guardrail or barrier shall be 27 inches (685 mm) maximum above the floor.

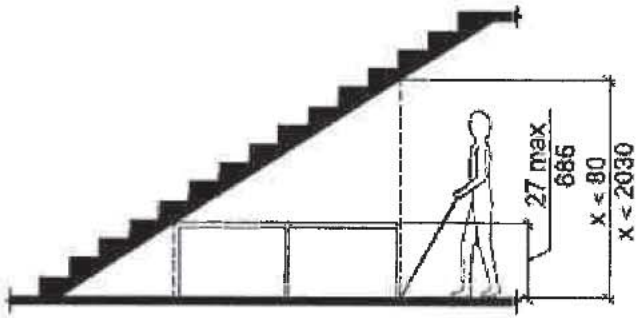

Fig. 307.4 Reduced Vertical Clearance

307.5 Required Clear Width. Protruding objects shall not reduce the clear width required for accessible routes.

308 Reach Ranges

308.1 General. Reach ranges shall comply with Section 308.

308.2 Forward Reach.

308.2.1 Unobstructed. Where a forward reach is unobstructed, the high forward reach shall be 48 inches (1220 mm) maximum and the low forward reach shall be 15 inches (380 mm) minimum above the floor.

PASSERO ASSOCIATES
engineering architecture

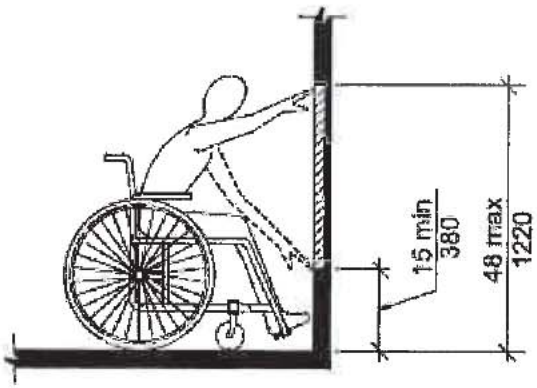

Fig. 308.2.1 Unobstructed Forward Reach

308.2.2 Obstructed High Reach. Where a high forward reach is over an obstruction, the clear floor space shall extend beneath the element for a distance not less than the required reach depth over the obstruction. The high forward reach shall be 48 inches (1220 mm) maximum where the reach depth is 20 inches (510 mm) maximum. Where the reach depth exceeds 20 inches (510 mm), the high forward reach shall be 44 inches (1120 mm) maximum, and the reach depth shall be 25 inches (635 mm) maximum.

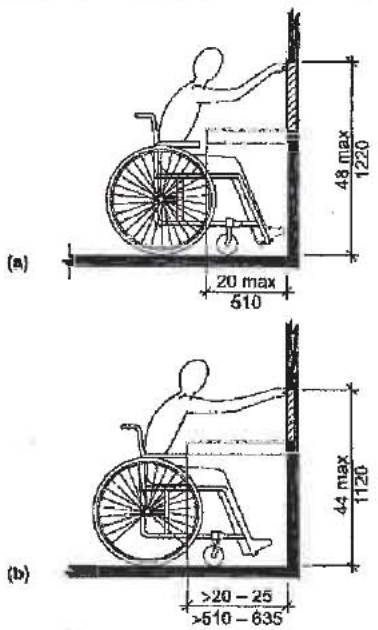

Fig. 308.2.2 Obstructed High Forward Reach

308.3 Side Reach.

308.3.1 Unobstructed. Where a clear floor space allows a parallel approach to an element and the side reach is unobstructed, the high side reach shall be 48 inches (1220 mm) maximum and the low side reach shall be 15 inches (380 mm) minimum above the floor.

EXCEPTION: Existing elements shall be permitted at 54 inches (1370 mm) maximum above the floor.

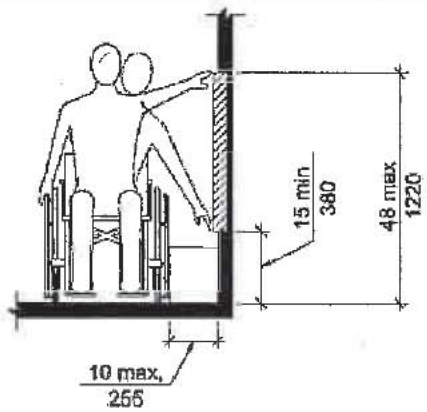

Fig. 308.3.1 Unobstructed Side Reach

308.3.2 Obstructed High Reach. Where a clear floor space allows a parallel approach to an object and the high side reach is over an obstruction, the height of the obstruction shall be 34 inches (865 mm) maximum and the depth of the obstruction shall be 24 inches (610 mm) maximum. The high side reach shall be 48 inches (1220 mm) maximum for a reach depth of 10 inches (255 mm) maximum. Where the reach depth exceeds 10 inches (255 mm), the high side reach shall be 46 inches (1170 mm) maximum for a reach depth of 24 inches (610 mm) maximum.

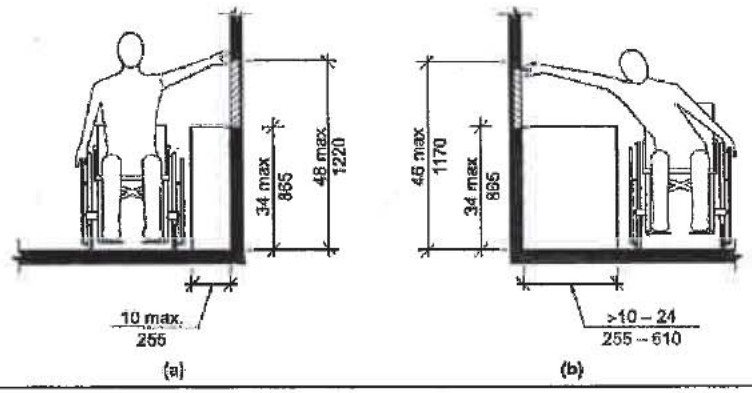

		Fig. 308.3.2 Obstructed High Side Reach **309 Operable Parts** **309.1 General.** Operable parts required to be accessible shall comply with Section 309. **309.2 Clear Floor Space.** A clear floor space complying with Section 305 shall be provided. **309.3 Height.** Operable parts shall be placed within one or more of the reach ranges specified in Section 308. **309.4 Operation.** Operable parts shall be operable with one hand and shall not require tight grasping, pinching, or twisting of the wrist. The force required to activate operable parts shall be 5.0 pounds (22.2 N) maximum. **EXCEPTION:** Gas pump nozzles shall not be required to provide operable parts that have an activating force of 5.0 pounds (22.2 N) maximum.
44	2010 NYS ECCC & IECC 2012	**2010 NYS ECCC** **SECTION 101 SCOPE AND GENERAL REQUIREMENTS** **101.4 Applicability.** The provisions of this code shall apply to the construction of buildings. This code shall apply as provided in this Section 101.4. Where, in any specific case, different sections of this code specify different materials, methods of construction or other requirements, the most restrictive shall govern. Where there is a conflict between a general requirement and a specific requirement, the specific requirement shall govern. **101.4.1 Existing buildings.** Except as specified in this chapter, this code shall not be used to require the removal, *alteration* or abandonment of, nor prevent the continued use and maintenance of, an existing building or building system lawfully in existence at the time of adoption of this code. **101.4.3 Additions, alterations or renovations.** It is intended that this code apply to additions, alterations, and renovations to existing residential building in all cases where the 2009 IECC would apply, and that this code shall apply to additions, alterations and renovations to existing commercial buildings in all cases where ASHRAE 90.1-2007 would apply. Additions, alterations or renovations to an existing building, building system or portion thereof shall conform to the provisions of this code as they relate to new construction without requiring the unaltered portion(s) of the existing building or building system to comply with this code. Additions, alterations or renovations shall not create an unsafe or hazardous condition or overload existing building systems. An addition shall be deemed to comply with this code if (1) the addition alone complies with this code, or (2) the existing building and addition considered as a single building comply with this code. **Exceptions:** The following need not comply with the provisions of this code, provided the energy use of the building is not increased: 1. Storm windows installed over existing fenestration. 2. Glass only replacements in an existing sash and frame, provided the *U*-factor and the solar heat gain coefficient (SHGC) will be equal to or lower than before the glass replacement. 3. Alterations, renovations or repairs to roof/ceiling, wall or floor cavities which are insulated to full depth with insulation having a minimal nominal value of R-3.0/inch. 4. Alterations, renovations or repairs to walls and floors, where the existing structure is without framing cavities and no new framing cavities are

		created. 5. Reroofing where neither the sheathing nor the insulation is exposed. Roofs without insulation in the cavity and where the sheathing or insulation is exposed during reroofing shall be insulated either above or below the sheathing. 6. Replacement of existing doors that separate *conditioned space* from the exterior shall not require the installation of a vestibule or revolving door, provided, however, that an existing vestibule that separates a *conditioned space* from the exterior shall not be removed. 7. An alteration that replaces less than 50 percent of the luminaires in a space, provided that such alteration does not increase the installed interior lighting power. 8. An alteration that replaces only the bulb and ballast within the existing luminaires in a space, provided that such *alteration* does not increase the installed interior lighting power. **101.4.4 Change in occupancy or use.** Spaces undergoing a change in occupancy that would result in an increase in demand for either fossil fuel or electrical energy shall comply with this code. Where the use in a space changes from one use in Table 505.5.2 to another use in Table 505.5.2, the installed lighting wattage shall comply with Section 505.5. **101.4.5 Change in space conditioning.** Any nonconditioned space that is altered to become conditioned space shall be required to be brought into full compliance with this code. **101.4.6 Statutory exemptions and limitations.** The provisions of sections 101.4.1, 101.4.2, 101.4.4, 101.4.5 and 101.4.6, of this code are subject to any provisions of Article 11 of the New York State Energy Law, as in effect at the time of adoption of this code and as thereafter amended from time to time, which may (1) require certain buildings to be exempt from this code or (2) limit the applicability of this code in the case of renovations of existing buildings. If the provisions of Article 11 of the New York State Energy Law, as in effect at the time of any alteration, renovation or repair to an existing building, require that such building be exempt from this code, then such alteration, renovation or repair to such building need not comply with this code. If the provisions of Article 11 of the New York State Energy Law, as in effect at the time of any alteration, renovation or repair to an existing building, limit the applicability of this code to such alteration, renovation or repair, then the applicability of this code to such alteration, renovation or repair shall be limited to the extent required by the provisions of Article 11 of the New York State Energy Law, as then in effect. **Example:** New York State Energy Law section 11-103(b), as in effect at the time of adoption of this code, provides that in the case of the renovation of an existing building, this code (1) shall apply only if the renovation is a "substantial renovation" (i.e., only if more than fifty percent of any "building subsystem" is replaced), and (2) shall apply only to that portion of the "building subsystem" which is being replaced. If New York State Energy Law section 11-103(b) remains in effect at the time of any alteration, renovation or repair to an existing building, the applicability of this code to such alteration, renovation or repair shall be limited to the extent required by said section 11-103(b).
45	2702.1	**SECTION 2702 EMERGENCY AND STANDBY POWER SYSTEMS [F]** **2702.1 Installation.** Emergency and standby power systems required by this code or the *Fire Code of New York State* shall be installed in accordance with this code, NFPA 110 and 111. **[F]** **2702.1.1 Stationary generators.** Emergency and standby power generators shall be listed in accordance with UL 2200. **[F]** **2702.2 Where required.** Emergency and standby power systems shall be provided where required by Sections 2702.2.1 through 2702.2.20. **[F]** **2702.2.2 Smoke control systems.** Standby power shall be provided for smoke control systems in accordance with Section 909.11. **[F]** **2702.2.3 Exit signs.** Emergency power shall be provided for exit signs in accordance with Section 1011.5.3. **[F]** **2702.2.4 Means of egress illumination.** Emergency power shall be provided for means of egress illumination in accordance with Section 1006.3. **[F]** **2702.3 Maintenance.** Emergency and standby power systems shall be maintained and tested in accordance with the *Fire Code of New York State*. **[F]**

PASSERO ASSOCIATES
engineering architecture

46	2702.2.2	**2702.2.2 Smoke control systems.** Standby power shall be provided for smoke control systems in accordance with Section 909.11. **[F]**
47	2902.1	**SECTION 2902 MINIMUM PLUMBING FACILITIES** **TABLE 2902.1 MINIMUM NUMBER OF REQUIRED PLUMBING FIXTURES[a] (See Sections 2902.2 and 2902.3) [P]**

NO.	CLASSIFIC-ATION	OCCUP-ANCY	DESCRIP-TION	WATER CLOSETS		LAVATORIES		DRINKING FOUNTAINS	OTHER[f]
				MALE	FEMALE	MALE	FEMALE		
6	Mercantile (see Sections 2902.2, 2902.4, 2902.4.1 and 2902.4.2)	M	Retail stores, service stations, shops, salesrooms, markets and shopping centers	1 per 500	1 per 500	1 per 750	1 per 750	1 per 1,000	1 service sink

2902.1.1 Unisex toilet and bath fixtures. Fixtures located within unisex toilet bathing rooms complying with Chapter 11 of this Code are permitted to be included in determining the minimum required number of fixtures for assembly and mercantile occupancies. **[P]**

2902.2 Separate facilities. Where plumbing fixtures are required, separate facilities shall be provided for each sex. **[P]**

Exceptions:

2. Separate facilities shall not be required in structures or tenant spaces with a total occupant load, including both employees and customers, of 15 or less.
3. Separate facilities shall not be required in mercantile occupancies in which the maximum occupant load is 50 or less.

NEW YORK STATE | Department of Health

Medical Marijuana Program
Application for Registration as
a Registered Organization

Appendix B: Architectural Program

A SEPARATE "APPENDIX B" SHALL BE COMPLETED FOR EACH SEPARATE BUILDING AND/OR FACILITY INCLUDED IN THE ORGANIZATION'S BUSINESS PLAN

COMPANY INFORMATION

Business Name:	Citiva Medical
Facility Type:	Manufacturing Facility ☐ Dispensing Facility ☑
Use and Occupancy Classification:	Mercantile
Building Construction Type and Classification:	VB
Facility Address:	5788 E. Circle Dr. Cicero, NY
Primary Contact Telephone number:	Michael Caridi 1-516-852-2549
Primary Contact Fax number:	mcaridi@citivamedical.com

PART I – ARCHITECTURAL PROGRAM & CONSTRUCTION TIMELINE:

Applicant shall identify planning requirements, including but not limited to:

- ☐ TOWN BOARD APPROVAL
- ☑ PLANNING BOARD APPROVAL
- ☐ ZONING BOARD OF APPEALS APPROVAL
- ☑ PREPARATION OF CONSTRUCTION DOCUMENTS
- ☑ BUILDING PERMIT
- ☑ BIDDING PHASE
- ☑ CONTRACT AWARD PHASE PER EACH APPLICABLE CONTRACTOR (Identify all that apply)
- ☑ COMMENCEMENT OF CONSTRUCTION
- ☑ COMPLETION OF CONSTRUCTION

Appendix B – Architectural Program

PART II – SITE PLAN(S)

Applicant shall provide the appropriate details for each of the following by identifying the location and dimension on the Site Plan attached to the application for each building location.

- ☑ Entrance and Exits
- ☑ Public Parking Spaces
- ☑ Staff Parking Spaces
- ☑ Accessible Parking Spaces
- ☑ Accessible Route(s)
- ☑ Fire Lane and/or Fire Apparatus Road
- ☑ Percentage of Green Space
- ☑ Location of Emergency Power Systems
- ☑ Loading & Unloading
- ☑ Security Gates & Fences

PART III – ENERGY SOURCES & ENGINEERING SYSTEMS:

Applicant shall provide the following minimum information to outline the specifications relating to the energy sources and engineering systems of each building included in the application.

Energy Source:

☑ Natural Gas ☐ Oil ☑ Electric
☐ Solar ☐ Other _____

Engineering Systems:

☑ Heating System: Type Gas, Size Varies Efficiency 80% e.t.,
Ventilation Requirements NYSMC Occupancy Compliance

☑ Cooling System: Type DX, Size Varies Efficiency 9.5-13 SEER
Ventilation Requirements NYSMC Occupancy Compliance

☑ Ventilation & Humidification Systems:
Type Ultrasoni, Size Varies, Efficiency 100%,
Ventilation Requirements NYSMC Occupancy Compliance

☑ Electrical Distribution Available Yes On-Site

☑ Water Supply: Municipal Water Service X or Private Well Water _____

☑ Sewage: Municipal Sewer System X or Private Septic System _____

☑ Emergency Power System:
Type NG, Size Varies Efficiency 60-80%,

Appendix B – Architectural Program

PART IV – BUILDING CODE COMPLIANCE: (pages 3-13)

CHECK ALL APPLICABLE CODES FOR THE FACILITY

- [x] 2010 BUILDING CODE OF NYS
- [x] 2010 FIRE CODE OF NYS
- [x] 2010 PLUMBING CODE OF NYS
- [x] 2010 MECHANICAL CODE OF NYS
- [x] 2010 FUEL GAS CODE OF NYS
- [x] 2010 PROPERTY MAINTENANCE CODE OF NYS
- [x] 2010 ENERGY CONSERVATION CONSTRUCTION CODE OF NYS
- [x] 2012 IECC COMMERCIAL PROVISIONS
- [x] 2010 EXISTING BUILDING CODE OF NYS
- [x] NEC NATIONAL ELECTRIC CODE, (Specify Applicable Version)
- [ ] 2014 NY CITY CONSTRUCTION CODE
- [ ] 2008 NY CITY CONSTRUCTION CODE
- [ ] 1968 NY CITY CONSTRUCTION CODE
- [x] NFPA 101-06 LIFE SAFETY CODE
- [x] ICC/ANSI A117.1-03 ACCESSIBLE AND USABLE BUILDINGS AND FACILITIES
- [x] OTHER

Appendix B – Architectural Program

Select Project Type:
Check all that apply. Refer to the Existing Building Code for definitions.

- ☐ New Building
- ☐ Repair
- ☐ Alteration Level 1
- ☐ Alteration Level 2
- ☑ Alteration Level 3
- ☑ Change of Occupancy
- ☐ Addition
- ☐ Historic Building
- ☐ Demolition
- ☐ Chapter 3. Prescriptive Compliance Method
- ☐ Chapter 13. Performance Compliance Method

Select Work Involved:
Check all that apply.

- ☑ General Construction
- ☐ Roofing
- ☐ Asbestos Abatement/Environmental
- ☑ Fire Alarm
- ☑ Structural
- ☑ Mechanical
- ☑ Plumbing
- ☑ Electrical
- ☐ Site Work
- ☐ Sprinkler
- ☐ Elevators
- ☐ Other:_____

CODE COMPLIANCE REVIEW

Applicant shall provide all applicable information in regards to the code topic and section listed below.

1. Code Compliance Review is based on the 2010 NY State Building Code for New Construction. If any other building code applies to the location or type of construction, provide applicable code and sections that most closely relates and references the code topic and information in the code sections listed below. Provide appropriate abbreviations for other applicable codes, such as: **FC:** ***Fire Code,*** **PC:** ***Plumbing Code,*** **MC:** ***Mechanical Code,*** **FGC:** ***Fuel Gas Code,*** **ECCC:** ***Energy Conservation Code.***
2. Provide the Required standard for each applicable code section. (I.e.: area, quantity, classification type, materials, hourly separation, etc.). If section does not apply, indicate one of the following with explanation: **NA:** *Not Applicable,* **NR:** *Not Required,* **NP:** *Not Permitted*
3. Provide your facilities "Actual" value for each required standard as per applicable code section.

No.	Topic	NYS Building Code Section	Other Code[1] (as Stated Above) & Section	Minimum Information Required to be Identified for this building/facility on the Building or Site Plan(s)	Required Code Value[2] /Allowed Code Value	Facility's Actual Value[3]
1	Use & Occupancy Classification	302.1 - 312		Use & occupancy of this facility. Identify all applicable materials, class and quantities regarding Table 307.1.	Mercantile	Mercantile

Appendix B – Architectural Program

No.	Topic	NYS Building Code Section	Other Code[1] (as Stated Above) & Section	Minimum Information Required to be Identified for this building/facility on the Building or Site Plan(s)	Required Code Value[2] /Allowed Code Value	Facility's Actual Value[3]
2	Combustible Storage	413		All combustible storage areas and rooms, as per applicable Building and Fire Codes. Identify all combustible stored materials, area and room dimensions, all required fire separations, and exit requirements.	N/A	N/A
3	Hazardous Materials	414		All hazardous materials stored or used as per applicable Building and Fire Codes. Identify all combustible stored materials, area and room dimensions, all required fire separations, and exit requirements.	N/A	N/A
4	Hazardous Materials Control Areas	414.2		Provide additional information indicating number, size, materials stored, and quantity of each material.	N/A	N/A
5	Building Area & Height	501-507		Provide the building area & height Provide all calculations and cite applicable code sections for increased Building Area & Heights allowed per building code(s).	1 Story 9,000 SF	1 Story 2,218 SF
6	Incidental Use Areas	508.2		Identify all Incidental Use Areas and required fire separation of occupancies on Building Plans.	N/A	N/A

Appendix B – Architectural Program

No.	Topic	NYS Building Code Section	Other Code[1] (as Stated Above) & Section	Minimum Information Required to be Identified for this building/facility on the Building or Site Plan(s)	Required Code Value[2] /Allowed Code Value	Facility's Actual Value[3]
7	Mixed Occupancies	508.3		Provide analysis with code cited, and required fire separation of occupancies. Identify required fire separation of occupancies on Building Plan(s).	All applicable sections Refer to attached for details	Fully compliant Mercantile / Buisness
8	Nonseparated Uses	508.3.2		Provide analysis with code cited, and required fire separation of occupancies. Identify required fire separation of occupancies on Building Plan(s).	All applicable sections Refer to attached for details	Fully compliant Mercantile / Buisness - Accessory Storage
9	Separated Uses (Ratio < 1)	508.3.3		Provide analysis with code cited, and required fire separation of occupancies. Identify required fire separation of occupancies on Building Plan(s).	N/A	N/A
10	Construction Classification	602		Provide Construction Classification per each building included in Application.	VB	VB
11	Fire Resistance Rating Reqm't for Building Elements	Table 601		Provide Fire Resistance Rating per each building element as per Table 601. Identify rating & elements on Building Plans.	0-hr	0-hr

Appendix B – Architectural Program

No.	Topic	NYS Building Code Section	Other Code[1] (as Stated Above) & Section	Minimum Information Required to be Identified for this building/facility on the Building or Site Plan(s)	Required Code Value[2] /Allowed Code Value	Facility's Actual Value[3]
12	Exterior Wall Fire-Resistance Rating	Table 602		Identify required fire resistance rating of exterior walls on Building Plan(s).	0-hr Refer to attached for details	0-hr
13	Exterior Fire Separation Distance	Table 602		Identify required fire separation distance of exterior walls between Buildings on Plan.	Refer to attached for details	Greater than 30 ft.
14	Fire Walls	705		Provide code information and identify all applicable required Fire Wall(s) and fire resistance requirement on Building Plans.	N/A	N/A
15	Fire Barriers	706		Provide code information and identify all applicable required Fire Barrier(s) and fire resistance requirement on Building Plans.	Refer to attached for details	Tenant demising wall See floor plans
16	Shaft Enclosures	707		Provide code information and identify all applicable required Shaft Wall(s) and fire resistance requirement on Building Plans.	N/A	N/A
17	Fire Partitions	708		Provide code information and identify all applicable required Fire Partition(s) and fire resistance requirement on Building Plans.	N/A	N/A

Appendix B – Architectural Program

No.	Topic	NYS Building Code Section	Other Code[1] (as Stated Above) & Section	Minimum Information Required to be Identified for this building/facility on the Building or Site Plan(s)	Required Code Value[2] /Allowed Code Value	Facility's Actual Value[3]
18	Horizontal Assemblies	711		Provide code information and identify all applicable required Horizontal Assemblies and fire resistance requirement on Building Plans.	N/A	N/A
19	Fire Protection: Sprinkler System	903		Indicate Type of Sprinkler System: ☐ NFPA 13 ☐ NFPA 13 R ☐ NFPA 13D Provide code information of all applicable requirements for Automatic Sprinkler Systems with code section cited.	N/A	N/A
20	Alt. Fire Extinguishing System	904		Provide code information of all applicable requirements for Alternative Automatic Fire-Extinguishing Systems with code section(s) cited.	N/A	N/A
21	Standpipe System	905		Provide code information of all applicable requirements for Standpipe Systems with code section(s) cited.	N/A	N/A
22	Fire Alarm & Detection Systems	907		Provide code information of all applicable requirements for Fire Alarm System(s) with code section cited. Indicate Type of Fire Alarm System ☑ Addressable ☐ Hardwired (zoned)	All applicable sections Refer to attached for details	Fully compliant

Appendix B – Architectural Program

No.	Topic	NYS Building Code Section	Other Code[1] (as Stated Above) & Section	Minimum Information Required to be Identified for this building/facility on the Building or Site Plan(s)	Required Code Value[2] /Allowed Code Value	Facility's Actual Value[3]
23	Emergency Alarm System	908		Provide code information of all applicable requirements for Emergency Alarm Systems with code section cited.	N/A	N/A
24	Fire Department Connections	912		Identify Fire Department connections in accordance with NFPA applicable standard.	All applicable sections Refer to attached for details	Fully compliant
25	Exits	1001.1 &2		Identify on the Building Plans and documents, per each door, the following information: door width, door height, direction of swing, type of construction, hourly rating, and door closures.	All applicable sections Refer to attached for details	See plans
26	Occupant Load	1004 & Table 1004.1.1		Identify the use/name of each room, dimensions of each room, and Occupant Loads per each room on the Building Plans.	Values per table 1004.1.1 Refer to attached for details	43
27	Egress Width	1005		Provide egress widths & cite applicable code section(s) and requirement(s) on the Building Plans	8.6" min. per table 1005.1 32" clear doors	36" min. door openings, see plans
28	Accessible Means of Egress	1007.1		Provide accessible means of egress as per Section 1007 & cite applicable code section(s) and requirement(s) on the Building Plans.	(2) Means of Egress Refer to attached for details	(2) Means of Egress All means of egress to meet req.'s of section 1007

Appendix B – Architectural Program

No.	Topic	NYS Building Code Section	Other Code[1] (as Stated Above) & Section	Minimum Information Required to be Identified for this building/facility on the Building or Site Plan(s)	Required Code Value[2] /Allowed Code Value	Facility's Actual Value[3]
29	Doors, Gates, and Turnstiles	1008		Means of egress doors shall meet the requirements of this section.	Refer to attached for details	See plans
30	Interior Stairs	1009		Identify the following information for each stairway on the Building Plan(s): the width of stairways; the height, width, depth and number of risers and treads; dimensions of landings; stairway construction type; and handrail height.	N/A	N/A
31	Ramps	1010.1		Identify the following information of each ramp, on the Building Plan(s): width; total vertical rise; length of ramp; and handrail height.	N/A	N/A
32	Common Path of Travel	1014.3		Identify on the Building Plan(s): the length of the "Common Path of Travel" per each room as per applicable building code requirements.	75'-0" max.	68'-0"
33	Exit Doorway Arrangement	1015		Identify on the Building Plan(s): applicable building code requirements for all Exits and Exit Access Doorways per each room and required exits in all buildings.	All applicable sections Refer to attached for details	See plans
34	Corridor Fire Rating	1017.1		Identify, on the Building Plan(s): all corridors with required fire resistance and the applicable fire rating.	All applicable sections. Refer to attached for details	See plans

Appendix B – Architectural Program

No.	Topic	NYS Building Code Section	Other Code[1] (as Stated Above) & Section	Minimum Information Required to be Identified for this building/facility on the Building or Site Plan(s)	Required Code Value[2] /Allowed Code Value	Facility's Actual Value[3]
35	Corridor Width	1017.2		Identify on the Building Plan(s): the width of all corridors. Provide applicable code section(s) and requirement(s).	44" min. per section 1017.2	82"
36	Dead End Corridor	1017.3		Corridors shall not exceed the maximum dead end corridor length as per applicable code.	20'-0" max.	N/A
37	Number of Exits and Continuity	1019		Identify on the Building Plan(s): required number of exits, continuity and arrangement as per the applicable code requirements.	2 min.	2
38	Vertical Exit Enclosures	1020		Identify on the Building Plan(s): all applicable code requirements for each Vertical Exit Enclosure.	N/A	N/A
39	Exit Passageways	1021		Identify on the Building Plan(s): all applicable code requirements for each Exit Passageway.	All applicable sections Refer to attached for details	See plans
40	Horizontal Exits	1022		Identify on the Building Plan(s): all applicable code requirements for each Horizontal Exit.	All applicable sections	See plans

Appendix B – Architectural Program

No.	Topic	NYS Building Code Section	Other Code[1] (as Stated Above) & Section	Minimum Information Required to be Identified for this building/facility on the Building or Site Plan(s)	Required Code Value[2] /Allowed Code Value	Facility's Actual Value[3]
41	Exterior Exit Ramps & Stairways	1023		Identify on the Building Plan(s): all applicable code requirements for each exterior exit ramps and stairways.	N/A	N/A
42	Exit Discharge	1024		Identify on the Building Plan(s): all applicable code requirements for each Exit Discharge.	N/A	N/A
43	Accessibility	1101.1 - 1110 & ICC/A117. 1(03)		Identify on the Building Plan(s): all applicable code requirements such that the design and construction of each building/facility provides accessibility to physically disabled persons.	All applicable sections Refer to attached for details	Fully compliant
44	Energy Conservation	2010 NYS ECCC & IECC 2012		Identify the R-Value and U-Value of each construction component and assembly of the building envelope as required in the applicable energy and building code(s).	All applicable sections Refer to attached for details	Fully compliant
45	Emergency & Standby Power	2702.1		Identify emergency & Standby Power locations and specifications of the system to be provided.	All applicable sections Refer to attached for details	Fully compliant
46	Smoke Control Systems	2702.2.2		Identify the Standby power for smoke control systems in accordance with Section 909.11 of NYS Building Code.	All applicable sections Refer to attached for details	Fully compliant

Appendix B – Architectural Program

No.	Topic	NYS Building Code Section	Other Code[1] (as Stated Above) & Section	Minimum Information Required to be Identified for this building/facility on the Building or Site Plan(s)	Required Code Value[2] /Allowed Code Value	Facility's Actual Value[3]
47	Plumbing Fixture Count	2902.1		Identify on the Building Plan(s): the minimum plumbing facilities as per applicable plumbing code(s).	1 for each. Refer to attached for details	1 for each
48	Available Street Water Pressure			Provide the available street or well water pressure.		60 psi
49	Fire Apparatus Access Road	FC503.1		Identify on the Site Plan: Fire Apparatus Road, Fire Lane and other Fire Service requirements per applicable Building and Fire Codes.	All applicable sections	Fully compliant

PASSERO ASSOCIATES
engineering architecture

<table>
<tr><th>NO.</th><th>NYS BUILDING CODE SECTION</th><th>REQUIRED CODE VALUE / ALLOWED CODE VALUE</th></tr>
<tr><td>7</td><td>508.3</td><td>508.3 Mixed occupancies. Each portion of a building shall be individually classified in accordance with Section 302.1.
Where a building contains more than one occupancy group, the building or portion thereof shall comply with Sections 508.3.1, 508.3.2, 508.3.3 or a combination of these sections.
Exceptions:
1. Occupancies separated in accordance with Section 509.</td></tr>
<tr><td>8</td><td>508.3.2</td><td>508.3.2 Nonseparated occupancies. Buildings or portions of buildings that comply with the provisions of this section shall qualify as nonseparated occupancies.</td></tr>
<tr><td>12</td><td>Table 602</td><td>TABLE 602 FIRE-RESISTANCE RATING REQUIREMENTS FOR EXTERIOR WALLS BASED ON FIRE SEPARATION DISTANCE[a, e]
<table>
<tr><th>FIRE SEPARATION DISTANCE = X (feet)</th><th>TYPE OF CONSTRUCTION</th><th>OCCUPANCY GROUP M</th></tr>
<tr><td>X<5[c]</td><td>All</td><td>2</td></tr>
<tr><td rowspan="2">5>X<10</td><td>IA</td><td>2</td></tr>
<tr><td>Others</td><td>1</td></tr>
<tr><td rowspan="3">10>X<30</td><td>IA, IB</td><td>1</td></tr>
<tr><td>IIB, VB</td><td>0</td></tr>
<tr><td>Others</td><td>1</td></tr>
<tr><td>X>30</td><td>All</td><td>0</td></tr>
</table>
a. Load-bearing exterior walls shall also comply with the fire-resistance rating requirements of Table 601.
b. For special requirements for Group U occupancies see Section 406.1.2
c. See Section 705.1.1 for party walls.
d. Open parking garages complying with Section 406 shall not be required to have a fire-resistance rating.
e. The fire-resistance rating of an exterior wall is determined based upon the fire separation distance of the exterior wall and the story in which the wall is located.</td></tr>
<tr><td>15</td><td>706</td><td>SECTION 706 FIRE BARRIERS</td></tr>
</table>

PASSERO ASSOCIATES
engineering architecture

706.1 General. Fire barriers installed as required elsewhere in this code or the *Fire Code of New York State* shall comply with this section.
706.2 Materials. Fire barriers shall be of materials permitted by the building type of construction.

706.2.1 Fire-resistance-rated glazing. Fire-resistance-rated glazing, when tested in accordance with ASTM E 119 and complying with the requirements of Section 706, shall be permitted. Fire-resistance-rated glazing shall bear a label or other identification showing the name of the manufacturer, the test standard and the identifier "W-XXX," where the "XXX" is the fire-resistance rating in minutes. Such label or identification shall be issued by an approved agency and shall be permanently affixed to the glazing.

706.3 Fire-resistance rating. The fire-resistance rating of fire barriers shall comply with this section.

706.3.8 Separation of mixed occupancies. Where the provisions of Section 508.3.3 are applicable, the fire barrier separating mixed occupancies shall have a fire-resistance rating of not less than that indicated in Section 508.3.3 based on the occupancies being separated.
706.3.9 Fire areas. The fire barrier or horizontal assembly, or both, separating a single occupancy into different fire areas shall have a fire-resistance rating of not less than that indicated in Table 706.3.9. The fire barriers or horizontal assemblies, or both, separating fire areas of mixed occupancies shall have a fire-resistance rating of not less than the highest value indicated in Table 706.3.9 for the occupancies under consideration.

TABLE 706.3.9 FIRE-RESISTANCE RATING REQUIREMENTS FOR FIRE BARRIER ASSEMBLIES BETWEEN FIRE AREAS

OCCUPANCY GROUP	FIRE-RESISTANCE RATING (hours)
A, B, E, F-2, H-4, H-5, I, M, R, S-2	2

706.4 Exterior walls. Where exterior walls serve as a part of a required fire-resistance-rated shaft or exit enclosure or separation, such walls shall comply with the requirements of Section 704 for exterior walls and the fire-resistance-rated enclosure requirements shall not apply.

Exception: Exterior walls required to be fire-resistance rated in accordance with Section 1014.5.1 for exterior egress balconies, Section 1020.1.4 for exit enclosures and Section 1023.6 for exterior exit ramps and stairways.

706.5 Continuity. Fire barriers shall extend from the top of the floor/ceiling assembly below to the underside of the floor or roof slab or deck above and shall be securely attached thereto. Such fire barriers shall be continuous through concealed spaces, such as the space above a suspended ceiling. The supporting construction for fire barrier walls shall be protected to afford the required fire-resistance rating of the fire barrier supported, except for 1-hour fire-resistance-rated incidental use area separations as required by Table 508.2 in buildings of Type IIB, IIIB and VB construction. Hollow vertical spaces within a fire barrier shall be fireblocked in accordance with Section 717.2 at every floor level.

Exceptions:

1. The maximum required fire-resistance rating for assemblies supporting fire barriers separating tank storage as provided for in Section 415.6.2.1

PASSERO ASSOCIATES
engineering architecture

		shall be 2 hours, but not less than required by Table 601 for the building construction type. 2. Shaft enclosures shall be permitted to terminate at a top enclosure complying with Section 707.12. **706.7 Openings.** Openings in a fire barrier wall shall be protected in accordance with Section 715. Openings shall be limited to a maximum aggregate width of 25 percent of the length of the wall, and the maximum area of any single opening shall not exceed 156 square feet (15 m²). Openings in exit enclosures and exit passageways shall also comply with Sections 1020.1.1 and 1021.4, respectively. **Exceptions:** 1. Openings shall not be limited to 156 square feet (15 m²) where adjoining fire areas are equipped throughout with an automatic sprinkler system in accordance with Section 903.3.1.1. 2. Fire doors serving an exit enclosure. 3. Openings shall not be limited to 156 square feet (15 m²) or an aggregate width of 25 percent of the length of the wall where the opening protective assembly has been tested in accordance with ASTM E 119 and has a minimum fire-resistance rating not less than the fire-resistance rating of the wall. 4. Fire windows permitted in atrium separation walls shall not be limited to a maximum aggregate width of 25 percent of length of the wall. **706.8 Penetrations.** Penetrations of fire barriers shall comply with Section 712. **706.8.1 Prohibited penetrations.** Penetrations into an exit enclosure or an exit passageway shall be allowed only when permitted by Section 1020.1.2 or 1021.5, respectively. **706.9 Joints.** Joints made in or between fire barriers shall comply with Section 713. **706.10 Ducts and air transfer openings.** Penetrations in a fire barrier by ducts and air transfer openings shall comply with Section 716.
22	907	**SECTION 907 FIRE ALARM AND DETECTION SYSTEMS** **907.1 General.** This section covers the application, installation, performance and maintenance of fire alarm systems and their components. **[F]** **907.1.1 Construction documents.** Construction documents for fire alarm systems shall be submitted for review and approval prior to system installation. Construction documents shall include, but not be limited to, all of the following: **[F]** 1. A floor plan which indicates the use of all rooms. 2. Locations of alarm-initiating and notification appliances. 3. Alarm control and trouble signaling equipment. 4. Annunciation. 5. Power connection. 6. Battery calculations. 7. Conductor type and sizes. 8. Voltage drop calculations. 9. Manufacturers, model numbers and listing information for equipment, devices and materials. 10. Details of ceiling height and construction. 11. The interface of fire safety control functions. **907.1.2 Equipment.** Systems and their components shall be listed and approved for the purpose for which they are installed. **[F]** **907.2 Where required-new buildings and structures.** An approved manual fire alarm system, automatic fire detection system or automatic heat

detection system installed in accordance with the provisions of this code and NFPA 72 shall be provided in new buildings and structures in accordance with Sections 907.2.1 through 907.2.23 and provide occupant notification in accordance with Section 907.9, unless other requirements are provided by another section of this code. Where automatic sprinkler protection installed in accordance with Section 903.3.1.1 or 903.3.1.2 is provided and connected to the building fire alarm system, automatic heat detection required by this section shall not be required.

The automatic fire detectors shall be smoke detectors. Where ambient conditions prohibit installation of automatic smoke detection, other automatic fire detection shall be allowed.

907.2.7 Group M. A manual fire alarm system shall be installed in Group M occupancies having an occupant load of 500 or more persons or more than 100 persons above or below the lowest level of exit discharge. The initiation of a signal from a manual fire alarm box shall initiate alarm notification appliances as required by Section 907.9. **[F]**

Exceptions:
1. Covered mall buildings complying with Section 402.
2. Manual fire alarm boxes are not required where the building is equipped throughout with an automatic sprinkler system and the alarm notification appliances will automatically activate upon sprinkler water flow.

907.2.7.1 Occupant notification. During times that the building is occupied, the initiation of a signal from a manual fire alarm box or from a water flow switch shall not be required to activate the alarm notification appliances when an alarm signal is activated at a constantly attended location from which evacuation instructions shall be initiated over an emergency voice/alarm communication system installed in accordance with Section 907.2.12.2.

The emergency voice/alarm communication system shall be allowed to be used for other announcements provided the manual fire alarm use takes precedence over any other use.

907.2.7.2 Fire detection. Areas of Group M buildings that are not protected by an automatic sprinkler system and that have an occupant load of more than 100 persons shall be provided with automatic smoke detection or automatic heat detection installed in accordance with NFPA 72.

907.2.10 Single- and multiple-station smoke alarms. Listed single- and multiple-station smoke alarms complying with UL 217 shall be installed in accordance with the provisions of this code and the household fire-warning equipment provisions of NFPA 72. **[F]**

907.2.10.1 Where required. Single- or multiple-station smoke alarms shall be installed in the locations described in Sections 907.2.10.1.1 through 907.2.10.1.3. **[F]**

907.2.10.2 Power source. In new construction, required smoke alarms shall receive their primary power from the building wiring where such wiring is served from a commercial source and shall be equipped with a battery backup. Smoke alarms shall emit a signal when the batteries are low. Wiring shall be permanent and without a disconnecting switch other than as required for overcurrent protection. **[F]**

907.2.10.4 Acceptance testing. When the installation of the alarm devices is complete, each detector and interconnecting wiring for multiple-station alarm devices shall be tested in accordance with the household fire warning equipment provisions of NFPA 72. **[F]**

907.2.15 Delayed egress locks. Where delayed egress locks are installed on means of egress doors in accordance with Section 1008.1.8.6, an automatic smoke or heat detection system shall be installed as required by that section. **[F]**

907.3 Manual fire alarm boxes. Manual fire alarm boxes shall be installed in accordance with Sections 907.3.1 through 907.3.5. **[F]**

907.3.1 Location. Manual fire alarm boxes shall be located not more than 5 feet (1524 mm) from the entrance to each exit. Additional manual fire alarm boxes shall be located so that travel distance to the nearest box does not exceed 200 feet (60 960 mm). **[F]**

Exception: In buildings protected by an automatic sprinkler system in accordance with 903.3.1.1 or 903.3.1.2, the travel distance to the nearest

PASSERO ASSOCIATES
engineering architecture

box shall not apply.

907.3.2 Height. The height of the manual fire alarm boxes shall be a minimum of 42 inches (1067 mm) and a maximum of 48 inches (1219 mm), measured vertically, from the floor level to the activating handle or lever of the box. **[F]**

907.3.3 Color. Manual fire alarm boxes shall be red in color. **[F]**

907.3.4 Signs. Where fire alarm systems are not monitored by a supervising station, an approved permanent sign shall be installed adjacent to each manual fire alarm box that reads: WHEN ALARM SOUNDS-CALL FIRE DEPARTMENT. **[F]**

Exception: Where the manufacturer has permanently provided this information on the manual fire alarm box.

907.3.5 Protective covers. The code enforcement official is authorized to require the installation of listed manual fire alarm box protective covers to prevent malicious false alarms or to provide the manual fire alarm box with protection from physical damage. The protective cover shall be transparent or red in color with a transparent face to permit visibility of the manual fire alarm box. Each cover shall include proper operating instructions. A protective cover that emits a local alarm signal shall not be installed unless approved. **[F]**

907.4 Power supply. The primary and secondary power supply for the fire alarm system shall be provided in accordance with NFPA 72.

907.5 Wiring. Wiring shall comply with the requirements of NFPA 70 and NFPA 72. Wireless protection systems utilizing radio-frequency transmitting devices shall comply with the special requirements for supervision of low-power wireless systems in NFPA 72. **[F]**

907.6 Activation. Where an alarm notification system is required by another section of this code, it shall be activated by: **[F]**

1. A required automatic fire alarm system.
2. Sprinkler water-flow devices.
3. Required manual fire alarm boxes.

907.8 Zones. Each floor shall be zoned separately and a zone shall not exceed 22,500 square feet (2090 m²). The length of any zone shall not exceed 300 feet (91 440 mm) in any direction. **[F]**

Exception: Automatic sprinkler system zones shall not exceed the area permitted by NFPA 13.

907.8.1 Zoning indicator panel. A zoning indicator panel and the associated controls shall be provided in an approved location. The visual zone indication shall lock in until the system is reset and shall not be canceled by the operation of an audible alarm-silencing switch. **[F]**

907.9 Alarm notification appliances. Alarm notification appliances shall be provided and shall be listed for their purpose. **[F]**

907.9.1 Visible alarms. Visible alarm notification appliances shall be provided in accordance with Sections 907.9.1.1 through 907.9.1.4. **[F]**

Exceptions:
1. Visible alarm notification appliances are not required in alterations, except where an existing fire alarm system is upgraded or replaced, or a new fire alarm system is installed.
2. Visible alarm notification appliances shall not be required in exits as defined in Section 1002.1.

907.9.1.1 Public and common areas. Visible alarm notification appliances shall be provided in public areas and common areas. **[F]**

907.9.1.2 Employee work areas. Where employee work areas have audible alarm coverage, the notification appliance circuits serving the employee work areas shall be initially designed with a minimum of 20 percent spare capacity to account for the potential of adding visible notification appliances in the future to accommodate hearing impaired employees. **[F]**

907.9.2 Audible alarms. Audible alarm notification appliances shall be provided and shall sound a distinctive sound that is not to be used for

any purpose other than that of a fire alarm. The audible alarm notification appliances shall provide a sound pressure level of 15 decibels (dBA) above the average ambient sound level or 5 dBA above the maximum sound level having a duration of at least 60 seconds, whichever is greater, in every occupied space within the building. The minimum sound pressure levels shall be: 70.dBA in occupancies in Groups R and I-1; 90 dBA in mechanical equipment rooms and 60 dBA in other occupancies. The maximum sound pressure level for audible alarm notification appliances shall be 120 dBA at the minimum hearing distance from the audible appliance. Where the average ambient noise is greater than 105 dBA, visible alarm notification appliances shall be provided in accordance with NFPA 72 and audible alarm notification appliances shall not be required. **[F]**

Exception: Visible alarm notification appliances shall be allowed in lieu of audible alarm notification appliances in critical-care areas of Group I-2 occupancies.

907.10 Fire safety functions. Automatic fire detectors utilized for the purpose of performing fire safety functions shall be connected to the building's fire alarm control panel where a fire alarm system is required by Section 907.2. Detectors shall, upon actuation, perform the intended function and activate the alarm notification appliances or a visible and audible supervisory signal at a constantly attended location. In buildings not required to be equipped with a fire alarm system, the automatic fire detector shall be powered by normal electrical service and, upon actuation, perform the intended function. The detectors shall be located in accordance with NFPA 72. **[F]**

907.11 Duct smoke detectors. Duct smoke detectors shall be connected to the building's fire alarm control panel when a fire alarm system is provided. Activation of a duct smoke detector shall initiate a visible and audible supervisory signal at a constantly attended location. Duct smoke detectors shall not be used as a substitute for required open-area detection. **[F]**

Exceptions:

1. The supervisory signal at a constantly attended location is not required where duct smoke detectors activate the building's alarm notification appliances.
2. In occupancies not required to be equipped with a fire alarm system, actuation of a smoke detector shall activate a visible and audible signal in an approved location. Smoke detector trouble conditions shall activate a visible or audible signal in an approved location and shall be identified as air duct detector trouble.

907.12 Access. Access shall be provided to each detector for periodic inspection, maintenance and testing. **[F]**

907.13 Fire-extinguishing systems. Automatic fire-extinguishing systems shall be connected to the building fire alarm system where a fire alarm system is required by another section of this code or is otherwise installed. **[F]**

907.14 Monitoring. Fire alarm systems required by this chapter or the *Fire Code of New York State* shall be monitored by an approved supervising station in accordance with NFPA 72. **[F]**

Exception: Supervisory service is not required for:

1. Single- and multiple-station smoke alarms required by Section 907.2.10.
2. Smoke detectors in Group I-3 occupancies.
3. Automatic sprinkler systems in one- and two-family dwellings.

907.15 Automatic telephone-dialing devices. Automatic telephone-dialing devices used to transmit an emergency alarm shall not be connected to any fire department telephone number unless approved by the fire chief. **[F]**

PASSERO ASSOCIATES
engineering architecture

		907.16 Acceptance tests. Upon completion of the installation of the fire alarm system, alarm notification appliances and circuits, alarm-initiating devices and circuits, supervisory-signal initiating devices and circuits, signaling line circuits, and primary and secondary power supplies shall be tested in accordance with NFPA 72. **[F]** **907.17 Record of completion.** A record of completion in accordance with NFPA 72 verifying that the system has been installed in accordance with the approved plans and specifications shall be provided. **[F]** **907.18 Instructions.** Operating, testing and maintenance instructions, and record drawings ("as builts") and equipment specifications shall be provided at an approved location. **[F]** **907.19 Inspection, testing and maintenance.** The maintenance and testing schedules and procedures for fire alarm and fire detection systems shall be in accordance with the *Fire Code of New York State.* **[F]**
24	912	**SECTION 912 FIRE DEPARTMENT CONNECTIONS** **912.1 Installation.** Fire department connections shall be installed in accordance with the NFPA standard applicable to the system design and shall comply with Sections 912.2 through 912.5. **[F]** **912.2 Location.** With respect to hydrants, driveways, buildings and landscaping, fire department connections shall be so located that fire apparatus and hose connected to supply the system will not obstruct access to the buildings for other fire apparatus. The location of fire department connections shall be approved. **[F]** **912.2.1 Visible location.** Fire department connections shall be located on the street side of buildings, fully visible and recognizable from the street or nearest point of fire department vehicle access or as otherwise approved by the code enforcement official. **[F]** **912.2.2 Existing buildings.** On existing buildings, wherever the fire department connection is not visible to approaching fire apparatus, the fire department connection shall be indicated by an approved sign mounted on the street front or on the side of the building. Such sign shall have the letters "FDC" at least 6 inches (152 mm) high and words in letters at least 2 inches (51 mm) high or an arrow to indicate the location. All such signs shall be subject to the approval of the code enforcement official. **[F]** **912.3 Access.** Immediate access to fire department connections shall be maintained at all times and without obstruction by fences, bushes, trees, walls or any other object for a minimum of 3 feet (914 mm). **[F]** **912.3.1 Locking fire department connection caps.** The code enforcement official is authorized to require locking caps on fire department connections for water-based fire protection systems where the responding fire department carries appropriate key wrenches for removal. **[F]** **912.4 Signs.** A metal sign with raised letters at least 1 inch (25 mm) in size shall be mounted on all fire department connections serving automatic sprinklers, standpipes or fire pump connections. Such signs shall read: AUTOMATIC SPRINKLERS, STANDPIPES or TEST CONNECTION, or a combination thereof as applicable. **[F]** **912.5 Backflow protection.** The potable water supply to automatic sprinkler and standpipe systems shall be protected against backflow as required by the *Plumbing Code of New York State.* **[P]**
25	1001.1 &2	**1001.1 General.** Buildings or portions thereof shall be provided with a means of egress system as required by this chapter. The provisions of this chapter shall control the design, construction and arrangement of means of egress components required to provide an approved means of egress from structures and portions thereof.

PASSERO ASSOCIATES
engineering architecture

		1001.2 Minimum requirements. It shall be unlawful to alter a building or structure in a manner that will reduce the number of exits or the capacity of the means of egress to less than required by this code.
26	1004 & Table 1004.1.1	**SECTION 1004 OCCUPANT LOAD** **1004.1 Design occupant load.** In determining means of egress requirements, the number of occupants for whom means of egress facilities shall be provided shall be determined in accordance with this section. Where occupants from accessory areas egress through a primary space, the calculated occupant load for the primary space shall include the total occupant load of the primary space plus the number of occupants egressing through it from the accessory area. **1004.1.1 Areas without fixed seating.** The number of occupants shall be computed at the rate of one occupant per unit of area as prescribed in Table 1004.1.1. For areas without fixed seating, the occupant load shall not be less than that number determined by dividing the floor area under consideration by the occupant per unit of area factor assigned to the occupancy as set forth in Table 1004.1.1. Where an intended use is not listed in Table 1004.1.1, the code enforcement official shall establish a use based on a listed use that most nearly resembles the intended use. **TABLE 1004.1.1 MAXIMUM FLOOR AREA ALLOWANCES PER OCCUPANT** **1004.2 Increased occupant load.** The occupant load permitted in any building, or portion thereof, is permitted to be increased from that number established for the occupancies in Table 1004.1.1, provided that all other requirements of the code are also met based on such modified number and the occupant load does not exceed one occupant per 7 square feet (0.65 m²) of occupiable floor space. Where required by the code enforcement official, an approved aisle, seating or fixed equipment diagram substantiating any increase in occupant load shall be submitted. Where required by the code enforcement official, such diagram shall be posted. **1004.3 Posting of occupant load.** Every room or space that is an assembly occupancy shall have the occupant load of the room or space posted in a conspicuous place, near the main exit or exit access doorway from the room or space. Posted signs shall be of an approved legible permanent design and shall be maintained by the owner or authorized agent.

FUNCTION OF SPACE	FLOOR AREA IN SQ. FT. PER OCCUPANT
Accessory storage areas, mechanical equipment room	300 gross
Assembly without fixed seats Concentrated (chairs only—not fixed) Standing space Unconcentrated (tables and chairs)	 7 net 5 net 15 net
Business areas	100 gross
Locker rooms	50 gross
Mercantile Areas on other floors Basement and grade floor areas Storage, stock, shipping areas	 60 gross 30 gross 300 gross

PASSERO ASSOCIATES
engineering architecture

28	1007.1	**1007.1 Accessible means of egress required.** Accessible means of egress shall comply with this section. Accessible spaces shall be provided with not less than one accessible means of egress. Where more than one means of egress is required by Section 1015.1 or 1019.1 from any accessible space, each accessible portion of the space shall be served by not less than two accessible means of egress. **Exceptions:** 1. One accessible means of egress is required from an accessible mezzanine level in accordance with Section 1007.3, 1007.4 or 1007.5. 2. In assembly spaces with sloped floors, one accessible means of egress is required from a space where the common path of travel of the accessible route for access to the wheelchair spaces meets the requirements in Section 1025.8.
29	1008	**SECTION 1008 DOORS, GATES AND TURNSTILES** **1008.1 Doors.** Means of egress doors shall meet the requirements of this section. Doors serving a means of egress system shall meet the requirements of this section and Section 1018.2. Doors provided for egress purposes in numbers greater than required by this code shall meet the requirements of this section. Means of egress doors shall be readily distinguishable from the adjacent construction and finishes such that the doors are easily recognizable as doors. Mirrors or similar reflecting materials shall not be used on means of egress doors. Means of egress doors shall not be concealed by curtains, drapes, decorations or similar materials. **1008.1.1 Size of doors.** The minimum width of each door opening shall be sufficient for the occupant load thereof and shall provide a clear width of not less than 32 inches (813 mm). Clear openings of doorways with swinging doors shall be measured between the face of the door and the stop, with the door open 90 degrees (1.57 rad). Where this section requires a minimum clear width of 32 inches (813 mm) and a door opening includes two door leaves without a mullion, one leaf shall provide a clear opening width of 32 inches (813 mm). The maximum width of a swinging door leaf shall be 48 inches (1219 mm) nominal. Means of egress doors in a Group I-2 occupancy used for the movement of beds shall provide a clear width not less than 41.5 inches (1054 mm). The height of doors shall not be less than 80 inches (2032 mm). **Exceptions:** 3. Door openings to storage closets less than 10 square feet (0.93 m²) in area shall not be limited by the minimum width. 8. Door openings required to be accessible within Type B units shall have a minimum clear width of 32 inches (813 mm). **1008.1.1.1 Projections into clear width.** There shall not be projections into the required clear width lower than 34 inches (864 mm) above the floor or ground. Projections into the clear opening width between 34 inches (864 mm) and 80 inches (2032 mm) above the floor or ground shall not exceed 4 inches (102 mm). **1008.1.2 Door swing.** Egress doors shall be side-hinged swinging. **Exceptions:** 1. Private garages, office areas, factory and storage areas with an occupant load of 10 or less. 6. In other than Group H occupancies, horizontal sliding doors complying with Section 1008.1.3.3 are permitted in a means of egress. 7. Power-operated doors in accordance with Section 1008.1.3.2. Doors shall swing in the direction of egress travel where serving an occupant load of 50 or more persons or a Group H occupancy.

The opening force for interior side-swinging doors without closers shall not exceed a 5-pound (22 N) force. For other side-swinging, sliding and folding doors, the door latch shall release when subjected to a 15-pound (67 N) force. The door shall be set in motion when subjected to a 30-pound (133 N) force. The door shall swing to a full-open position when subjected to a 15-pound (67 N) force. Forces shall be applied to the latch side.

1008.1.3 Special doors. Special doors and security grilles shall comply with the requirements of Sections 1008.1.3.1 through 1008.1.3.5.

1008.1.3.2 Power-operated doors. Where means of egress doors are operated by power, such as doors with a photoelectric-actuated mechanism to open the door upon the approach of a person, or doors with power-assisted manual operation, the design shall be such that in the event of power failure, the door is capable of being opened manually to permit means of egress travel or closed where necessary to safeguard means of egress. The forces required to open these doors manually shall not exceed those specified in Section 1008.1.2, except that the force to set the door in motion shall not exceed 50 pounds (220 N). The door shall be capable of swinging from any position to the full width of the opening in which such door is installed when a force is applied to the door on the side from which egress is made. Full-power-operated doors shall comply with BHMA A156.10. Power-assisted and low-energy doors shall comply with BHMA A156.19.

Exceptions:

2. Horizontal sliding doors complying with Section 1008.1.3.3.
3. For a biparting door in the emergency breakout mode, a door leaf located within a multiple-leaf opening shall be exempt from the minimum 32-inch (813 mm) single-leaf requirement of Section 1008.1.1, provided a minimum 32-inch (813 mm) clear opening is provided when the two biparting leaves meeting in the center are broken out.

1008.1.3.4 Access-controlled egress doors. The entrance doors in a means of egress in buildings with an occupancy in Group A, B, E, M, R-1 or R-2 and entrance doors to tenant spaces in occupancies in Groups A, B, E, M, R-1 and R-2 are permitted to be equipped with an approved entrance and egress access control system which shall be installed in accordance with all of the following criteria:

1. A sensor shall be provided on the egress side arranged to detect an occupant approaching the doors. The doors shall be arranged to unlock by a signal from or loss of power to the sensor.
2. Loss of power to that part of the access control system which locks the doors shall automatically unlock the doors.
3. The doors shall be arranged to unlock from a manual unlocking device located 40 inches to 48 inches (1016 mm to 1219 mm) vertically above the floor and within 5 feet (1524 mm) of the secured doors. Ready access shall be provided to the manual unlocking device and the device shall be clearly identified by a sign that reads "PUSH TO EXIT." When operated, the manual unlocking device shall result in direct interruption of power to the lock-independent of the access control system electronics-and the doors shall remain unlocked for a minimum of 30 seconds.
4. Activation of the building fire alarm system, if provided, shall automatically unlock the doors, and the doors shall remain unlocked until the fire alarm system has been reset.
5. Activation of the building automatic sprinkler or fire detection system, if provided, shall automatically unlock the doors. The doors shall remain unlocked until the fire alarm system has been reset.
6. Entrance doors in buildings with an occupancy in Group A, B, E or M shall not be secured from the egress side during periods that the building is open to the general public.

1008.1.3.5 Security grilles. In Groups B, F, M and S, horizontal sliding or vertical security grilles are permitted at the main exit and shall be openable from the inside without the use of a key or special knowledge or effort during periods that the space is occupied. The grilles shall remain secured in the full-open position during the period of occupancy by the general public. Where two or more means of egress are required, not more than one-half of the exits or exit access doorways shall be equipped with horizontal sliding or vertical security grilles.

1008.1.4 Floor elevation. There shall be a floor or landing on each side of a door. Such floor or landing shall be at the same elevation on each side of the door. Landings shall be level except for exterior landings, which are permitted to have a slope not to exceed 0.25 unit vertical in 12 units horizontal (2-percent slope).

PASSERO ASSOCIATES
engineering architecture

Exceptions:
2. Exterior doors as provided for in Section 1003.5, Exception 1, and Section 1018.2, which are not on an accessible route.
4. Variations in elevation due to differences in finish materials, but not more than 0.5 inch (12.7 mm).

1008.1.5 Landings at doors. Landings shall have a width not less than the width of the stairway or the door, whichever is greater. Doors in the fully open position shall not reduce a required dimension by more than 7 inches (178 mm). When a landing serves an occupant load of 50 or more, doors in any position shall not reduce the landing to less than one-half its required width. Landings shall have a length measured in the direction of travel of not less than 44 inches (1118 mm).

1008.1.6 Thresholds. Thresholds at doorways shall not exceed 0.75 inch (19.1 mm) in height for sliding doors serving dwelling units or 0.5 inch (12.7 mm) for other doors. Raised thresholds and floor level changes greater than 0.25 inch (6.4 mm) at doorways shall be beveled with a slope not greater than one unit vertical in two units horizontal (50-percent slope).

1008.1.7 Door arrangement. Space between two doors in a series shall be 48 inches (1219 mm) minimum plus the width of a door swinging into the space. Doors in a series shall swing either in the same direction or away from the space between the doors.

1008.1.8 Door operations. Except as specifically permitted by this section egress doors shall be readily openable from the egress side without the use of a key or special knowledge or effort.
1008.1.8.1 Hardware. Door handles, pulls, latches, locks and other operating devices on doors required to be accessible by Chapter 11 shall not require tight grasping, tight pinching or twisting of the wrist to operate.
1008.1.8.2 Hardware height. Door handles, pulls, latches, locks and other operating devices shall be installed 34 inches (864 mm) minimum and 48 inches (1219 mm) maximum above the finished floor. Locks used only for security purposes and not used for normal operation are permitted at any height.

Exception: Access doors or gates in barrier walls and fences protecting pools, spas and hot tubs shall be permitted to have operable parts of the release of latch on self-latching devices at 54 inches (1370 mm) maximum above the finished floor or ground, provided the self-latching devices are not also self-locking devices operated by means of a key, electronic opener or integral combination lock.
1008.1.8.3 Locks and latches. Locks and latches shall be permitted to prevent operation of doors where any of the following exists:
1. Places of detention or restraint.
2. In buildings in occupancy Group A having an occupant load of 300 or less, Groups B, F, M and S, and in places of religious worship, the main exterior door or doors are permitted to be equipped with key-operated locking devices from the egress side provided:
2.1. The locking device is readily distinguishable as locked,
2.2. A readily visible durable sign is posted on the egress side on or adjacent to the door stating: THIS DOOR TO REMAIN UNLOCKED WHEN BUILDING IS OCCUPIED. The sign shall be in letters 1 inch (25 mm) high on a contrasting background,
2.3. The use of the key-operated locking device is revokable by the code enforcement official for due cause.
3. Where egress doors are used in pairs, approved automatic flush bolts shall be permitted to be used, provided that the door leaf having the automatic flush bolts has no doorknob or surface-mounted hardware.
4. Doors from individual dwelling or sleeping units of Group R occupancies having an occupant load of 10 or less are permitted to be equipped with a night latch, dead bolt or security chain, provided such devices are openable from the inside without the use of a key or tool.
1008.1.8.4 Bolt locks. Manually operated flush bolts or surface bolts are not permitted.

Exceptions:

PASSERO ASSOCIATES
engineering architecture

1. On doors not required for egress in individual dwelling units or sleeping units.
2. Where a pair of doors serves a storage or equipment room, manually operated edge- or surface-mounted bolts are permitted on the inactive leaf.

1008.1.8.5 Unlatching. The unlatching of any door or leaf shall not require more than one operation.

Exceptions:
1. Places of detention or restraint.
2. Where manually operated bolt locks are permitted by Section 1008.1.8.4.
3. Doors with automatic flush bolts as permitted by Section 1008.1.8.3, Exception 3.
4. Doors from individual dwelling units and sleeping units of Group R occupancies as permitted by Section 1008.1.8.3, Exception 4.

1008.1.8.6 Delayed egress locks. Approved, listed, delayed egress locks shall be permitted to be installed on doors serving any occupancy except Group A, E and H occupancies in buildings that are equipped throughout with an automatic sprinkler system in accordance with Section 903.3.1.1 or an approved automatic smoke or heat detection system installed in accordance with Section 907, provided that the doors unlock in accordance with Items 1 through 6 below. A building occupant shall not be required to pass through more than one door equipped with a delayed egress lock before entering an exit.
1. The doors unlock upon actuation of the automatic sprinkler system or automatic fire detection system.
2. The doors unlock upon loss of power controlling the lock or lock mechanism.
3. The door locks shall have the capability of being unlocked by a signal from the fire command center.
4. The initiation of an irreversible process which will release the latch in not more than 15 seconds when a force of not more than 15 pounds (67 N) is applied for 1 second to the release device. Initiation of the irreversible process shall activate an audible signal in the vicinity of the door. Once the door lock has been released by the application of force to the releasing device, relocking shall be by manual means only.

Exception: Where approved, a delay of not more than 30 seconds is permitted.
5. A sign shall be provided on the door located above and within 12 inches (305 mm) of the release device reading: PUSH UNTIL ALARM SOUNDS. DOOR CAN BE OPENED IN 15 [30] SECONDS.
6. Emergency lighting shall be provided at the door.

1008.1.8.7 Stairway doors. Interior stairway means of egress doors shall be openable from both sides without the use of a key or special knowledge or effort.

Exceptions:
1. Stairway discharge doors shall be openable from the egress side and shall only be locked from the opposite side.
2. This section shall not apply to doors arranged in accordance with Section 403.12.
3. In stairways serving not more than four stories, doors are permitted to be locked from the side opposite the egress side, provided they are openable from the egress side and capable of being unlocked simultaneously without unlatching upon a signal from the fire command center, if present, or a signal by emergency personnel from a single location inside the main entrance to the building.

1008.1.9 Panic and fire exit hardware. Where panic and fire exit hardware is installed, it shall comply with the following:
1. The actuating portion of the releasing device shall extend at least one-half of the door leaf width.
2. The maximum unlatching force shall not exceed 15 pounds (67 N).

Electrical rooms with equipment rated 1,200 amperes or more and over 6 feet (1829 mm) wide that contain overcurrent devices, switching devices or control devices with exit access doors must be equipped with panic hardware and doors must swing in the direction of egress.

PASSERO ASSOCIATES
engineering architecture

		If balanced doors are used and panic hardware is required, the panic hardware shall be the push-pad type and the pad shall not extend more then one-half the width of the door measured from the latch side.
33	1015	**SECTION 1015 EXIT AND EXIT ACCESS DOORWAYS** **1015.1 Exit or exit access doorways required.** Two exits or exit access doorways from any space shall be provided where one of the following conditions exists: 1. The occupant load of the space exceeds the values in Table 1015.1. 2. The common path of egress travel exceeds the limitations of Section 1014.3. 3. Where required by Sections 1015.3, 1015.4 and 1015.5. **TABLE 1015.1 SPACES WITH ONE MEANS OF EGRESS** OCCUPANCY | MAXIMUM OCCUPANT LOAD A, B,E[a], F, M, U | 49 **1015.1.1 Three or more exits.** Access to three or more exits shall be provided from a floor area where required by Section 1019.1. **1015.2 Exit or exit access doorway arrangement.** Required exits shall be located in a manner that makes their availability obvious. Exits shall be unobstructed at all times. Exit and exit access doorways shall be arranged in accordance with Sections 1015.2.1 and 1015.2.2. **1015.2.1 Two exits or exit access doorways.** Where two exits or exit access doorways are required from any portion of the exit access, the exit doors or exit access doorways shall be placed a distance apart equal to not less than one-half of the length of the maximum overall diagonal dimension of the building or area to be served measured in a straight line between exit doors or exit access doorways. Interlocking or scissor stairs shall be counted as one exit stairway. **Exceptions:** 1. Where exit enclosures are provided as a portion of the required exit and are interconnected by a 1-hour fire-resistance-rated corridor conforming to the requirements of Section 1017, the required exit separation shall be measured along the shortest direct line of travel within the corridor. 2. Where a building is equipped throughout with an automatic sprinkler system in accordance with Section 903.3.1.1 or 903.3.1.2, the separation distance of the exit doors or exit access doorways shall not be less than one-third of the length of the maximum overall diagonal dimension of the area served. **1015.2.2 Three or more exits or exit access doorways.** Where access to three or more exits is required, at least two exit doors or exit access doorways shall be arranged in accordance with the provisions of Section 1015.2.1.
34	1017.1	**1017.1 Construction.** Corridors shall be fire-resistance rated in accordance with Table 1017.1. The corridor walls required to be fire-resistance rated shall comply with Section 708 for fire partitions. **TABLE 1017.1 CORRIDOR FIRE-RESISTANCE RATING**

PASSERO ASSOCIATES
engineering architecture

			OCCUPANCY	OCCUPANT LOAD SERVED BY CORRIDOR	REQUIRED FIRE-RESISTANCE RATING (hours) Without sprinkler system
			A, B, E, F, M, S, U	Greater than 30	1
39	1021	**SECTION 1021 EXIT PASSAGEWAYS** **1021.1 Exit passageway.** Exit passageways serving as an exit component in a means of egress system shall comply with the requirements of this section. An exit passageway shall not be used for any purpose other than as a means of egress. **1021.2 Width.** The width of exit passageways shall be determined as specified in Section 1005.1 but such width shall not be less than 44 inches (1118 mm), except that exit passageways serving an occupant load of less than 50 shall not be less than 36 inches (914 mm) in width. The required width of exit passageways shall be unobstructed. **Exception:** Doors, when fully opened, and handrails, shall not reduce the required width by more than 7 inches (178 mm). Doors in any position shall not reduce the required width by more than one-half. Other nonstructural projections such as trim and similar decorative features are permitted to project into the required width 1.5 inches (38 mm) on each side. **1021.3 Construction.** Exit passageway enclosures shall have walls, floors and ceilings of not less than 1-hour fire-resistance rating, and not less than that required for any connecting exit enclosure. Exit passageways shall be constructed as fire barriers in accordance with Section 706. **1021.4 Openings and penetrations.** Exit passageway opening protectives shall be in accordance with the requirements of Section 715. Except as permitted in Section 402.4.6, openings in exit passageways other than unexposed exterior openings shall be limited to those necessary for exit access to the exit passageway from normally occupied spaces and for egress from the exit passageway. Where interior exit enclosures are extended to the exterior of a building by an exit passageway, the door assembly from the exit enclosure to the exit passageway shall be protected by a fire door conforming to the requirements in Section 715.4. Fire door assemblies in exit passageways shall comply with Section 715.4.4. Elevators shall not open into an exit passageway. **1021.5 Penetrations.** Penetrations into and openings through an exit passageway are prohibited except for required exit doors, equipment and ductwork necessary for independent pressurization, sprinkler piping, standpipes, electrical raceway for fire department communication and electrical raceway serving the exit passageway and terminating at a steel box not exceeding 16 square inches (0.010 m²). Such penetrations shall be protected in accordance with Section 712. There shall be no penetrations or communicating openings, whether protected or not, between adjacent exit passageways.			
43	1101.1-1110 & ICC/A117.1(03)	**SECTION 1101 GENERAL** **1101.1 Scope.** The provisions of this chapter shall control the design and construction of facilities for accessibility to physically disabled persons. **1101.2 Design.** Buildings and facilities shall be designed and constructed to be accessible in accordance with this code and ICC/ANSI A117.1.			

PASSERO ASSOCIATES
engineering architecture

		SECTION 1103 SCOPING REQUIREMENTS **1103.1 Where required.** Sites, buildings, structures, facilities, elements and spaces, temporary or permanent, shall be accessible to persons with physical disabilities. **1103.2 General exceptions.** Sites, buildings, structures, facilities, elements and spaces shall be exempt from this chapter to the extent specified in this section. **1103.2.1 Specific requirements.** Accessibility is not required in buildings and facilities, or portions thereof, to the extent permitted by Sections 1104 through 1110. **1103.2.2 Existing buildings.** Existing buildings shall comply with the *Existing Building Code of New York State.* **1103.2.3 Employee work areas.** Spaces and elements within employee work areas shall only be required to comply with Sections 907.9.1.2, 1007 and 1104.3.1 and shall be designed and constructed so that individuals with disabilities can approach, enter and exit the work area. Work areas, or portions of work areas, that are less than 150 square feet (14 m²) in area and elevated 7 inches (178 mm) or more above the ground or finish floor where the elevation is essential to the function of the space shall be exempt from all requirements. **1103.2.6 Construction sites.** Structures, sites and equipment directly associated with the actual processes of construction including, but not limited to, scaffolding, bridging, materials hoists, materials storage or construction trailers are not required to be accessible. **1103.2.7 Raised areas.** Raised areas used primarily for purposes of security, life safety or fire safety including, but not limited to, observation galleries, prison guard towers, fire towers or lifeguard stands are not required to be accessible or to be served by an accessible route. **1103.2.8 Limited access spaces.** Nonoccupiable spaces accessed only by ladders, catwalks, crawl spaces, freight elevators or very narrow passageways are not required to be accessible. **1103.2.9 Equipment spaces.** Spaces frequented only by personnel for maintenance, repair or monitoring of equipment are not required to be accessible. Such spaces include, but are not limited to, elevator pits, elevator penthouses, mechanical, electrical or communications equipment rooms, piping or equipment catwalks, water or sewage treatment pump rooms and stations, electric substations and transformer vaults, and highway and tunnel utility facilities. **SECTION 1104 ACCESSIBLE ROUTE** **1104.1 Site arrival points.** Accessible routes within the site shall be provided from public transportation stops; accessible parking; accessible passenger loading zones; and public streets or sidewalks to the accessible building entrance served. **Exception:** Other than in buildings or facilities containing or serving Type B units, an accessible route shall not be required between site arrival points and the building or facility entrance if the only means of access between them is a vehicular way not providing for pedestrian access. **1104.2 Within a site.** At least one accessible route shall connect accessible buildings, accessible facilities, accessible elements and accessible spaces that are on the same site. **Exception:** An accessible route is not required between accessible buildings, accessible facilities, accessible elements and accessible spaces that have, as the only means of access between them, a vehicular way not providing for pedestrian access. **1104.3 Connected spaces.** When a building or portion of a building is required to be accessible, an accessible route shall be provided to each portion of the building, to accessible building entrances connecting accessible pedestrian walkways and the public way.

Exception: In assembly areas with fixed seating required to be accessible, an accessible route shall not be required to serve fixed seating where wheelchair spaces or designated aisle seats required to be on an accessible route are not provided.

1104.3.1 Employee work areas. Common use circulation paths within employee work areas shall be accessible routes.

Exceptions:
1. Common use circulation paths, located within employee work areas that are less than 300 square feet (27.9 m^2) in size and defined by permanently installed partitions, counters, casework or furnishings, shall not be required to be accessible routes.
2. Common use circulation paths, located within employee work areas, that are an integral component of equipment, shall not be required to be accessible routes.
3. Common use circulation paths, located within exterior employee work areas that are fully exposed to the weather, shall not be required to be accessible routes.

1104.5 Location. Accessible routes shall coincide with or be located in the same area as a general circulation path. Where the circulation path is interior, the accessible route shall also be interior. Where only one accessible route is provided, the accessible route shall not pass through kitchens, storage rooms, restrooms, closets or similar spaces.

1104.6 Security barriers. Security barriers including, but not limited to, security bollards and security check points shall not obstruct a required accessible route or accessible means of egress.

Exception: Where security barriers incorporate elements that cannot comply with these requirements, such as certain metal detectors, fluoroscopes or other similar devices, the accessible route shall be permitted to be provided adjacent to security screening devices. The accessible route shall permit persons with disabilities passing around security barriers to maintain visual contact with their personal items to the same extent provided others passing through the security barrier.

SECTION 1105 ACCESSIBLE ENTRANCES

1105.1 Public entrances. In addition to accessible entrances required by Sections 1105.1.1 through 1105.1.6, at least 60 percent of all public entrances shall be accessible.

Exceptions:

1. An accessible entrance is not required to areas not required to be accessible.
2. Loading and service entrances that are not the only entrance to a tenant space.

1105.1.3 Restricted entrances. Where restricted entrances are provided to a building or facility, at least one restricted entrance to the building or facility shall be accessible.

1105.1.5 Service entrances. If a service entrance is the only entrance to a building or a tenant space in a facility, that entrance shall be accessible.

SECTION 1106 PARKING AND PASSENGER LOADING FACILITIES

1106.1 Required. Where parking is provided, accessible parking spaces shall be provided in compliance with Table 1106.1, except as required by Sections 1106.2 through 1106.4. Where more than one parking facility is provided on a site, the number of parking spaces required to be accessible shall be calculated separately for each parking facility.

Exception: This section does not apply to parking spaces used exclusively for buses, trucks, other delivery vehicles, law enforcement vehicles or vehicular impound and motor pools where lots accessed by the public are provided with an accessible passenger loading zone.

TABLE 1106.1 ACCESSIBLE PARKING SPACES

TOTAL PARKING SPACES PROVIDED	REQUIRED MINIMUM NUMBER OF ACCESSIBLE SPACES
1 to 25	1
26 to 50	2
51 to 75	3
76 to 100	4
101 to 150	5
151 to 200	6
201 to 300	7
301 to 400	8
401 to 500	9
501 to 1,000	2% of total
1,001 and over	20, plus one for each 100, or fraction thereof, over 1,000

1106.1.1 Access aisles. Accessible parking spaces shall be in conformance with ICC/ANSI A117.1 except that spaces shall be provided with access aisles at least 8 feet (2440 mm) in width.

1106.3 Hospital outpatient facilities. Ten percent of patient and visitor parking spaces provided to serve hospital outpatient facilities shall be accessible.

1106.4 Rehabilitation facilities and outpatient physical therapy facilities. Twenty percent, but not less than one, of the portion of patient and visitor parking spaces serving rehabilitation facilities and outpatient physical therapy facilities shall be accessible.

1106.5 Signage. Each accessible parking space shall be provided with signage displaying the international symbol of accessibility. Each access aisle shall be provided with signage reading "NO PARKING ANYTIME". Signs shall be permanently installed at a clear height of between 60 inches (1525 mm) and 84 inches (2185 mm) above grade and shall not interfere with an accessible route from an access aisle.

1106.6 Location. Accessible parking spaces shall be located on the shortest accessible route of travel from adjacent parking to an accessible building entrance. In parking facilities that do not serve a particular building, accessible parking spaces shall be located on the shortest route to an accessible pedestrian entrance to the parking facility. Where buildings have multiple accessible entrances with adjacent parking, accessible parking spaces shall be dispersed and located near the accessible entrances.

Exceptions:

PASSERO ASSOCIATES
engineering architecture

2. Accessible parking spaces shall be permitted to be located in different parking facilities if substantially equivalent or greater accessibility is provided in terms of distance from an accessible entrance or entrances, parking fee and user convenience.

1106.7 Passenger loading zones. Passenger loading zones shall be designed and constructed in accordance with ICC/ANSI A117.1.

1106.7.1 Continuous loading zones. Where passenger loading zones are provided, one passenger loading zone in every continuous 100 linear feet (30.4 m) maximum of loading zone space shall be accessible.
1106.7.2 Medical facilities. A passenger loading zone shall be provided at an accessible entrance to licensed medical and long-term care facilities where people receive physical or medical treatment or care and where the period of stay exceeds 24 hours.
1106.7.3 Valet parking. A passenger loading zone shall be provided at valet parking services.

SECTION 1109 OTHER FEATURES AND FACILITIES

1109.1 General. Accessible building features and facilities shall be provided in accordance with Sections 1109.2 through 1109.14.

1109.2 Toilet and bathing facilities. Toilet rooms and bathing facilities shall be accessible. Where a floor level is not required to be connected by an accessible route, the only toilet rooms or bathing facilities provided within the facility shall not be located on the inaccessible floor. At least one of each type of fixture, element, control or dispenser in each accessible toilet room and bathing facility shall be accessible.

Exceptions:

1. In toilet rooms or bathing facilities accessed only through a private office, not for common or public use and intended for use by a single occupant, any of the following alternatives are allowed:
1.1. Doors are permitted to swing into the clear floor space, provided the door swing can be reversed to meet the requirements in ICC/ANSI A117.1;
1.2 The height requirements for the water closet in ICC/ANSI A117.1 are not applicable;
1.3. Grab bars are not required to be installed in a toilet room, provided that reinforcement has been installed in the walls and located so as to permit the installation of such grab bars; and
1.4. The requirement for height, knee and toe clearance shall not apply to a lavatory.
2. This section is not applicable to toilet and bathing facilities that serve dwelling units or sleeping units that are not required to be accessible by Section 1107.
3. Where multiple single-user toilet rooms or bathing facilities are clustered at a single location, at least 50 percent but not less than one room for each use at each cluster shall be accessible.
4. Where no more than one urinal is provided in a toilet room or bathing facility, the urinal is not required to be accessible.
5. Toilet rooms that are part of critical care or intensive care patient sleeping rooms are not required to be accessible.
1109.2.1 Unisex toilet and bathing rooms. In assembly and mercantile occupancies, an accessible unisex toilet room shall be provided where an aggregate of six or more male and female water closets is required. In buildings of mixed occupancy, only those water closets required for the assembly or mercantile occupancy shall be used to determine the unisex toilet room requirement. In recreational facilities where separate-sex bathing rooms are provided, an accessible unisex bathing room shall be provided. Fixtures located within unisex toilet and bathing rooms shall be included in determining the number of fixtures provided in an occupancy.

Exception: Where each separate-sex bathing room has only one shower or bathtub fixture, a unisex bathing room is not required.

PASSERO ASSOCIATES
engineering architecture

1109.2.1.1 Standard. Unisex toilet and bathing rooms shall comply with Sections 1109.2.1.2 through 1109.2.1.7 and ICC/ANSI A117.1.
1109.2.1.2 Unisex toilet rooms. Unisex toilet rooms shall include only one water closet and only one lavatory. A unisex bathing room in accordance with Section 1109.2.1.3 shall be considered a unisex toilet room.

Exception: A urinal is permitted to be provided in addition to the water closet in a unisex toilet room.
1109.2.1.3 Unisex bathing rooms. Unisex bathing rooms shall include only one shower or bathtub fixture. Unisex bathing rooms shall also include one water closet and one lavatory. Where storage facilities are provided for separate-sex bathing rooms, accessible storage facilities shall be provided for unisex bathing rooms.
1109.2.1.4 Location. Unisex toilet and bathing rooms shall be located on an accessible route. Unisex toilet rooms shall be located not more than one story above or below separate-sex toilet rooms. The accessible route from any separate-sex toilet room to a unisex toilet room shall not exceed 500 feet (152 m).
1109.2.1.6 Clear floor space. Where doors swing into a unisex toilet or bathing room, a clear floor space not less than 30 inches by 48 inches (762 mm by 1219 mm) shall be provided, within the room, beyond the area of the door swing.
1109.2.1.7 Privacy. Doors to unisex toilet and bathing rooms shall be securable from within the room.
1109.2.2 Water closet compartment. Where water closet compartments are provided in a toilet room or bathing facility, at least one wheelchair-accessible compartment shall be provided. Where the combined total water closet compartments and urinals provided in a toilet room or bathing facility is six or more, at least one ambulatory-accessible water closet compartment shall be provided in addition to the wheelchair-accessible compartment. Wheelchair-accessible and ambulatory-accessible compartments shall comply with ICC/ANSI A117.1.

1109.3 Sinks. Where sinks are provided, at least 5 percent but not less than one provided in accessible spaces shall comply with ICC/ANSI A117.1.

Exception: Mop or service sinks are not required to be accessible.

1109.4 Kitchens and kitchenettes. Where kitchens and kitchenettes are provided in accessible spaces or rooms, they shall be accessible in accordance with ICC/ANSI A117.1.

1109.5 Drinking fountains. Where drinking fountains are provided on an exterior site, on a floor or within a secured area, the drinking fountains shall be provided in accordance with Sections 1109.5.1 and 1109.5.2.

1109.5.1 Minimum number. No fewer than two drinking fountains shall be provided. One drinking fountain shall comply with the requirements for people who use a wheelchair and one drinking fountain shall comply with the requirements for standing persons.

Exception: A single drinking fountain that complies with the requirements for people who use a wheelchair and standing persons shall be permitted to be substituted for two separate drinking fountains.
1109.5.2 More than the minimum number. Where more than the minimum number of drinking fountains specified in Section 1109.5.1 are provided, 50 percent of the total number of drinking fountains provided shall comply with the requirements for persons who use a wheelchair and 50 percent of the total number of drinking fountains provided shall comply with the requirements for standing persons.

Exception: Where 50 percent of the drinking fountains yields a fraction, 50 percent shall be permitted to be rounded up or down, provided that the total number of drinking fountains complying with this section equals 100 percent of the drinking fountains.

1109.8 Storage. Where fixed or built-in storage elements such as cabinets, shelves, medicine cabinets, closets and drawers are provided in required

accessible spaces, at least one of each type shall contain storage space complying with ICC/ANSI A117.1.

1109.8.1 Lockers. Where lockers are provided in accessible spaces, at least five percent, but not less than one, of each type shall be accessible.
1109.8.2 Shelving and display units. Self-service shelves and display units shall be located on an accessible route. Such shelving and display units shall not be required to comply with reach-range provisions.
1109.8.3 Coat hooks and shelves. Where coat hooks and shelves are provided in toilet rooms or toilet compartments or in dressing, fitting or locker rooms, at least one of each type shall be accessible and shall be provided in accessible toilet rooms without toilet compartments, accessible toilet compartments and accessible dressing, fitting and locker rooms.

1109.11 Seating at tables, counters and work surfaces. Where seating or standing space at fixed or built-in tables, counters or work surfaces is provided in accessible spaces, at least 5 percent of the seating and standing spaces, but not less than one, shall be accessible. In Group I-3 occupancy visiting areas at least 5 percent, but not less than one, cubicle or counter shall be accessible on both the visitor and detainee sides.

Exceptions:

1. Check-writing surfaces at check-out aisles not required to comply with Section 1109.12.2 are not required to be accessible.
1109.11.1 Dispersion. Accessible fixed or built-in seating at tables, counters or work surfaces shall be distributed throughout the space or facility containing such elements.

1109.12 Service facilities. Service facilities shall provide for accessible features in accordance with Sections 1109.12.1 through 1109.12.5.

1109.12.1 Dressing, fitting and locker rooms. Where dressing rooms, fitting rooms or locker rooms are provided, at least 5 percent, but not less than one, of each type of use in each cluster provided shall be accessible.
1109.12.2 Check-out aisles. Where check-out aisles are provided, accessible check-out aisles shall be provided in accordance with Table 1109.12.2. Where check-out aisles serve different functions, at least one accessible check-out aisle shall be provided for each function. Where checkout aisles serve different functions, accessible check-out aisles shall be provided in accordance with Table 1109.12.2 for each function. Where check-out aisles are dispersed throughout the building or facility, accessible check-out aisles shall also be dispersed. Traffic control devices, security devices and turnstiles located in accessible check-out aisles or lanes shall be accessible.

TABLE 1109.12.2 ACCESSIBLE CHECK-OUT AISLES

TOTAL CHECK-OUT AISLES OF EACH FUNCTION	MINIMUM NUMBER OF ACCESSIBLE CHECK-OUT AISLES OF EACH FUNCTION
1 to 4	1
5 to 8	2
9 to 15	3
Over 15	3, plus 20% of additional aisles

1109.12.3 Point of sale and service counters. Where counters are provided for sales or distribution of goods or services, at least one of each type provided shall be accessible. Where such counters are dispersed throughout the building or facility, accessible counters shall also be dispersed.
1109.12.5 Queue and waiting lines. Queue and waiting lines servicing accessible counters or check-out aisles shall be accessible.

1109.13 Controls, operating mechanisms and hardware. Controls, operating mechanisms and hardware intended for operation by the occupant, including switches that control lighting and ventilation and electrical convenience outlets, in accessible spaces, along accessible routes or as parts of accessible elements shall be accessible.

Exceptions:

1. Operable parts that are intended for use only by service or maintenance personnel shall not be required to be accessible.
2. Electrical or communication receptacles serving a dedicated use shall not be required to be accessible.
3. Where two or more outlets are provided in a kitchen above a length of counter top that is uninterrupted by a sink or appliance, one outlet shall not be required to be accessible.
4. Floor electrical receptacles shall not be required to be accessible.
5. HVAC diffusers shall not be required to be accessible.
6. Except for light switches, where redundant controls are provided for a single element, one control in each space shall not be required to be accessible.
7. Access doors or gates in barrier walls and fences protecting pools, spas and hot tubs shall be permitted to have operable parts of the release of latch on self-latching devices at 54 inches (1370 mm) maximum and 48 inches minimum above the finished floor or ground, provided the self-latching devices are not also self-locking devices, operated by means of a key, electronic opener, or integral combination lock.

1109.13.1 Operable window. Where operable windows are provided in rooms that are required to be accessible in accordance with Sections 1107.5.1.1, 1107.5.2.1, 1107.5.3.1, 1107.5.4, 1107.6.1.1, 1107.6.2.2.1 and 1107.6.4.1, at least one window in each room shall be accessible and each required operable window shall be accessible.

Exception: Accessible windows are not required in bathrooms or kitchens.

SECTION 1110 SIGNAGE

1110.1 Signs. Required accessible elements shall be identified by the International Symbol of Accessibility at the following locations:

1. Accessible parking spaces required by Section 1106.1 except where the total number of parking spaces provided is four or less.
2. Accessible passenger loading zones.
3. Accessible areas of refuge required by Section 1007.6.
4. Accessible rooms where multiple single-user toilet or bathing rooms are clustered at a single location.
5. Accessible entrances where not all entrances are accessible.
6. Accessible check-out aisles where not all aisles are accessible. The sign, where provided, shall be above the check-out aisle in the same location as the check-out aisle number or type of check-out identification.
7. Unisex toilet and bathing rooms.
8. Accessible dressing, fitting and locker rooms where not all such rooms are accessible.

1110.2 Directional signage. Directional signage indicating the route to the nearest like accessible element shall be provided at the following locations. These directional signs shall include the International Symbol of Accessibility:

1. Inaccessible building entrances.
2. Inaccessible public toilets and bathing facilities.
3. Elevators not serving an accessible route.

4. At each separate-sex toilet and bathing room indicating the location of the nearest unisex toilet or bathing room where provided in accordance with Section 1109.2.1.
5. At exits and elevators serving a required accessible space, but not providing an approved accessible means of egress, signage shall be provided in accordance with Section 1007.7.

1110.3 Other signs. Signage indicating special accessibility provisions shall be provided as shown:

1. Each assembly area required to comply with Section 1108.2.6 shall provide a sign notifying patrons of the availability of assistive listening systems.

Exception: Where ticket offices or windows are provided, signs are not required at each assembly area provided that signs are displayed at each ticket office or window informing patrons of the availability of assistive listening systems.
2. At each door to an egress stairway, exit passageway and exit discharge, signage shall be provided in accordance with Section 1011.3.
3. At areas of refuge, signage shall be provided in accordance with Sections 1007.6.3 through 1007.6.5.
4. At areas for assisted rescue, signage shall be provided in accordance with Section 1007.8.3.

ICC/A117.1

301 General

301.1 Scope. The provisions of Chapter 3 shall apply where required by the scoping provisions adopted by the administrative authority or by Chapters 4 through 10.

302 Floor Surfaces

302.1 General. Floor surfaces shall be stable, firm, and slip resistant, and shall comply with Section 302. Changes in level in floor surfaces shall comply with Section 303.

302.2 Carpet. Carpet or carpet tile shall be securely attached and shall have a firm cushion, pad, or backing or no cushion or pad. Carpet or carpet tile shall have a level loop, textured loop, level cut pile, or level cut/uncut pile texture. The pile shall be 1/2 inch (13 mm) maximum in height. Exposed edges of carpet shall be fastened to the floor and shall have trim along the entire length of the exposed edge. Carpet edge trim shall comply with Section 303.

Fig. 302.2 Carpet on Floor Surfaces

302.3 Openings. Openings in floor surfaces shall be of a size that does not permit the passage of a 1/2 inch (13 mm) diameter sphere, except as allowed in Sections 407.4.3, 408.4.3, 409.4.3, 410.4, and 805.10. Elongated openings shall be placed so that the long dimension is perpendicular to the dominant

direction of travel.

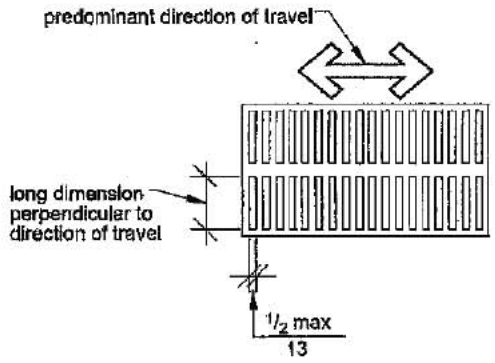

Fig. 302.3 Openings in Floor Surfaces

303 Changes in Level

303.1 General. Changes in level in floor surfaces shall comply with Section 303.

303.2 Vertical. Changes in level of 1/4 inch (6.4 mm) maximum in height shall be permitted to be vertical.

Fig. 303.2 Carpet on Floor Surfaces

303.3 Beveled. Changes in level greater than 1/4 inch (6.4 mm) in height and not more than 1/2 inch (13 mm) maximum in height shall be beveled with a slope not steeper than 1:2.

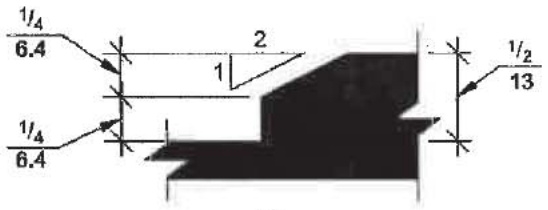

(a)

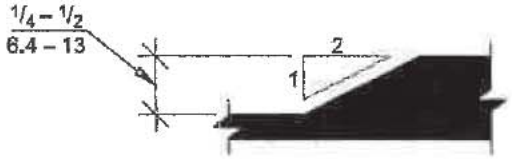

(b)

Fig. 303.3 Beveled Changes in Level

303.4 Ramped. Changes in level greater that 1/2 inch (13 mm) in height shall be ramped and shall comply with Section 405 or 406.

304 Turning Space

304.1 General. A turning space shall comply with Section 304.

304.2 Floor Surface. Floor surfaces of a turning space shall have a slope not steeper than 1:48 and shall comply with Section 302.

304.3 Size. Turning spaces shall comply with Section 304.3.1 or 304.3.2.

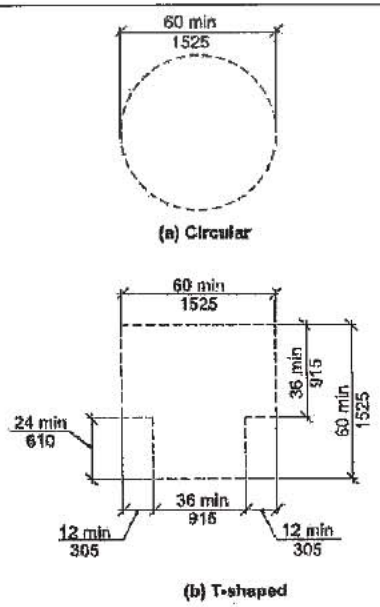

Fig. 304.3 Size of Turning Space

304.3.1 Circular Space. The turning space shall be a circular space with a 60-inch (1525 mm) minimum diameter. The turning space shall be permitted to include knee and toe clearance complying with Section 306.

304.3.2 T-Shaped Space. The turning space shall be a T-shaped space within a 60-inch (1525 mm) minimum square, with arms and base 36 inches (915 mm) minimum in width. Each arm of the T shall be clear of obstructions 12 inches (305 mm) minimum in each direction, and the base shall be clear of obstructions 24 inches (610 mm) minimum. The turning space shall be permitted to include knee and toe clearance complying with Section 306 only at the end of either the base or one arm.

304.4 Door Swing. Unless otherwise specified, doors shall be permitted to swing into turning spaces.

305 Clear Floor Space

305.1 General. A clear floor space shall comply with Section 305.

305.2 Floor Surfaces. Floor surfaces of a clear floor space shall have a slope not steeper than 1:48 and shall comply with Section 302.

305.3 Size. The clear floor space shall be 48 inches (1220 mm) minimum in length and 30 inches (760 mm) minimum in width.

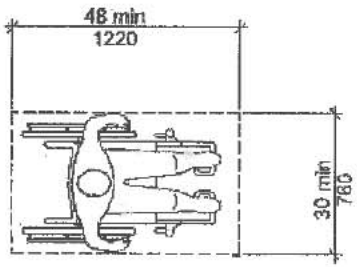

Fig. 305.3 Size of Clear Floor Space

305.4 Knee and Toe Clearance. Unless otherwise specified, clear floor space shall be permitted to include knee and toe clearance complying with Section 306.

305.5 Position. Unless otherwise specified, the clear floor space shall be positioned for either forward or parallel approach to an element.

PASSERO ASSOCIATES
engineering architecture

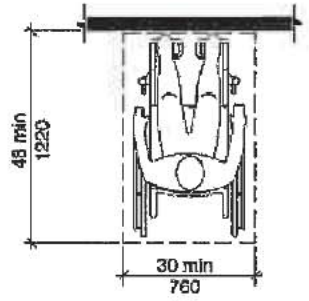

(a) Forward

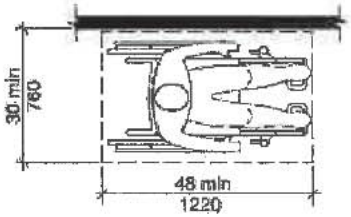

(b) Parallel

Fig. 305.5 Position of Clear Floor Space

305.6 Approach. One full, unobstructed side of the clear floor space shall adjoin or overlap an accessible route or adjoin another clear floor space.

305.7 Alcoves. If a clear floor space is in an alcove or otherwise confined on all or part of three sides, additional maneuvering clearances complying with Sections 305.7.1 and 305.7.2 shall be provided, as applicable.

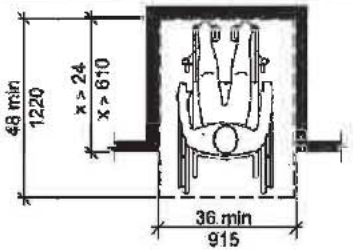

(a) Forward Approach

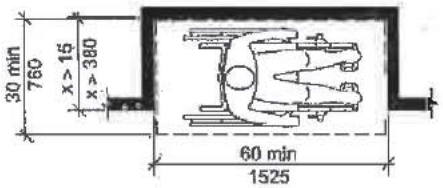

(b) Parallel Approach

Fig. 305.7 Maneuvering Clearance in an Alcove

305.7.1 Parallel Approach. Where the clear floor space is positioned for a parallel approach, the alcove shall be 60 inches (1525 mm) minimum in width where the depth exceeds 15 inches (380 mm).

305.7.2 Forward Approach. Where the clear floor space is positioned for a forward approach, the alcove shall be 36 inches (915 mm) minimum in width where the depth exceeds 24 inches (610 mm).

306 Knee and Toe Clearance

306.1 General. Where space beneath an element is included as part of clear floor space at an element, clearance at an element, or a turning space, the space shall comply with Section 306. Additional space beyond knee and toe clearance shall be permitted beneath elements.

306.2 Toe Clearance.

PASSERO ASSOCIATES
engineering architecture

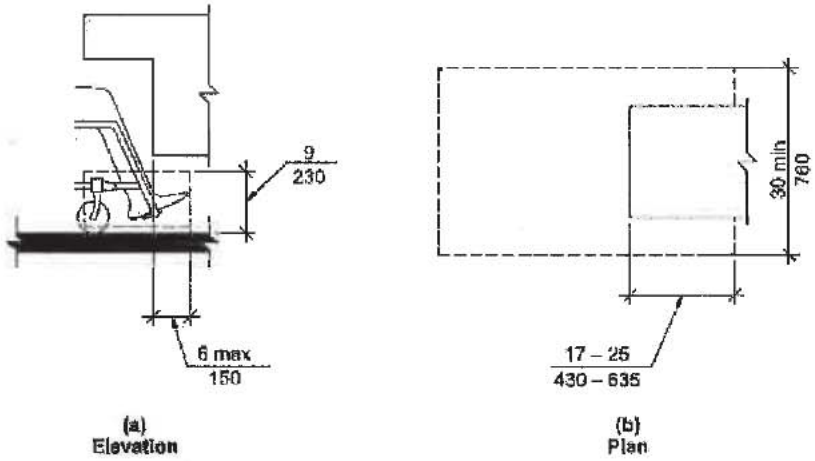

Fig. 306.2 Toe Clearance

306.2.1 General. Space beneath an element between the floor and 9 inches (230 mm) above the floor shall be considered toe clearance and shall comply with Section 306.2.

306.2.2 Maximum Depth. Toe clearance shall be permitted to extend 25 inches (635 mm) maximum under an element.

306.2.3 Minimum Depth. Where toe clearance is required at an element as part of a clear floor space, the toe clearance shall extend 17 inches (430 mm) minimum beneath the element.

306.2.4 Additional Clearance. Space extending greater than 6 inches (150 mm) beyond the available knee clearance at 9 inches (230 mm) above the floor shall not be considered toe clearance.

306.2.5 Width. Toe clearance shall be 30 inches (760 mm) minimum in width.

306.3 Knee Clearance.

PASSERO ASSOCIATES
engineering architecture

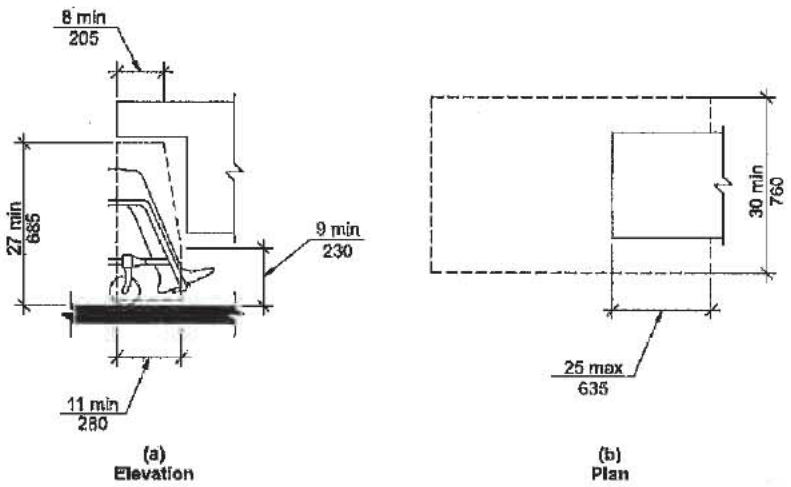

Fig. 306.3 Knee Clearance

306.3.1 General. Space beneath an element between 9 inches (230 mm) and 27 inches (685 mm) above the floor shall be considered knee clearance and shall comply with Section 306.3.

306.3.2 Maximum Depth. Knee clearance shall be permitted to extend 25 inches (635 mm) maximum under an element at 9 inches (230 mm) above the floor.

306.3.3 Minimum Depth. Where knee clearance is required beneath an element as part of a clear floor space, the knee clearance shall be 11 inches (280 mm) minimum in depth at 9 inches (230 mm) above the floor, and 8 inches (205 mm) minimum in depth at 27 inches (685 mm) above the floor.

306.3.4 Clearance Reduction. Between 9 inches (230 mm) and 27 inches (685 mm) above the floor, the knee clearance shall be permitted to be reduced at a rate of 1 inch (25 mm) for each 6 inches (150 mm) in height.

306.3.5 Width. Knee clearance shall be 30 inches (760 mm) minimum in width.

307 Protruding Objects

307.1 General. Protruding objects on circulation paths shall comply with Section 307.

307.2 Protrusion Limits. Objects with leading edges more than 27 inches (685 mm) and not more than 80 inches (2030 mm) above the floor shall protrude 4 inches (100 mm) maximum horizontally into the circulation path.

EXCEPTIONS:

PASSERO ASSOCIATES
engineering architecture

1. Handrails shall be permitted to protrude 4½ inches (115 mm) maximum.
2. Door closers and door stops shall be permitted to be 78 inches (1980 mm) minimum above the floor.

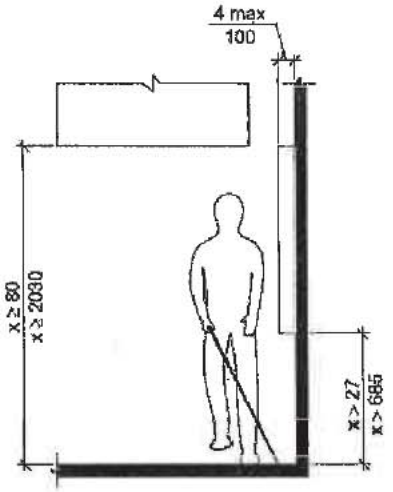

Fig. 307.2 Limits of Protruding Objects

307.3 Post-Mounted Objects. Objects on posts or pylons shall be permitted to overhang 4 inches (100 mm) maximum where more than 27 inches (685 mm) and not more than 80 inches (2030 mm) above the floor. Objects on multiple posts or pylons where the clear distance between the posts or pylons is greater than 12 inches (305 mm) shall have the lowest edge of such object either 27 inches (685 mm) maximum or 80 inches (2030 mm) minimum above the floor.

PASSERO ASSOCIATES
engineering architecture

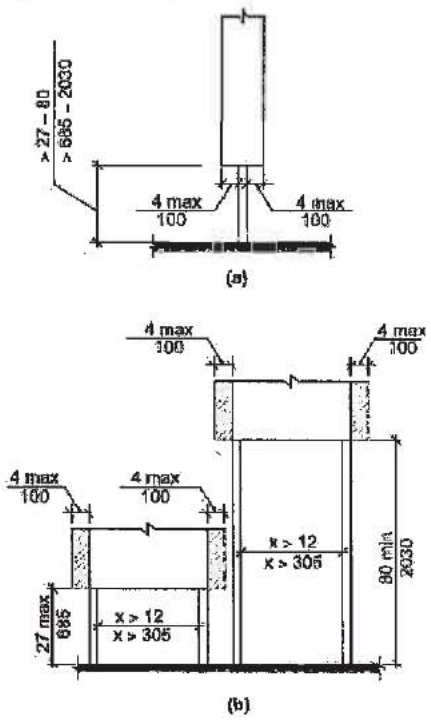

Fig. 307.3 Post-Mounted Protruding Objects

307.4 Reduced Vertical Clearance. Guardrails or other barriers shall be provided where object protrusion is beyond the limits allowed by Sections 307.2 and 307.3, and where the vertical clearance is less than 80 inches (2030 mm) above the floor. The leading edge of such guardrail or barrier shall be 27 inches (685 mm) maximum above the floor.

PASSERO ASSOCIATES
engineering architecture

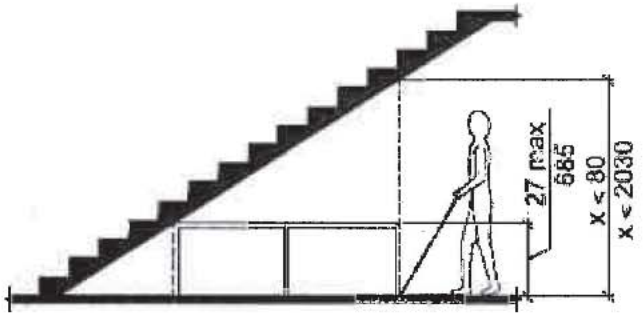

Fig. 307.4 Reduced Vertical Clearance

307.5 Required Clear Width. Protruding objects shall not reduce the clear width required for accessible routes.

308 Reach Ranges

308.1 General. Reach ranges shall comply with Section 308.

308.2 Forward Reach.

308.2.1 Unobstructed. Where a forward reach is unobstructed, the high forward reach shall be 48 inches (1220 mm) maximum and the low forward reach shall be 15 inches (380 mm) minimum above the floor.

PASSERO ASSOCIATES
engineering architecture

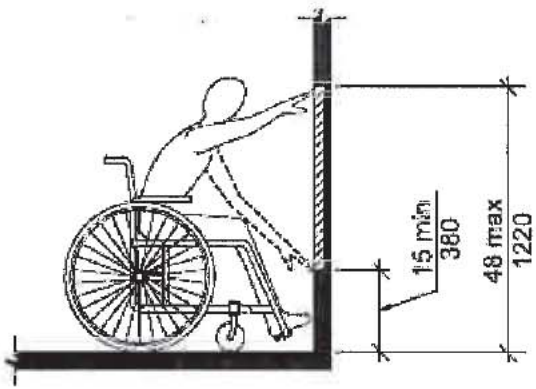

Fig. 308.2.1 Unobstructed Forward Reach

308.2.2 Obstructed High Reach. Where a high forward reach is over an obstruction, the clear floor space shall extend beneath the element for a distance not less than the required reach depth over the obstruction. The high forward reach shall be 48 inches (1220 mm) maximum where the reach depth is 20 inches (510 mm) maximum. Where the reach depth exceeds 20 inches (510 mm), the high forward reach shall be 44 inches (1120 mm) maximum, and the reach depth shall be 25 inches (635 mm) maximum.

PASSERO ASSOCIATES
engineering architecture

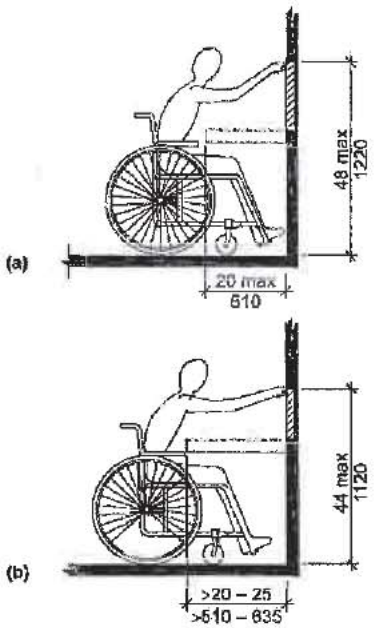

Fig. 308.2.2 Obstructed High Forward Reach

308.3 Side Reach.

308.3.1 Unobstructed. Where a clear floor space allows a parallel approach to an element and the side reach is unobstructed, the high side reach shall be 48 inches (1220 mm) maximum and the low side reach shall be 15 inches (380 mm) minimum above the floor.

EXCEPTION: Existing elements shall be permitted at 54 inches (1370 mm) maximum above the floor.

PASSERO ASSOCIATES
engineering architecture

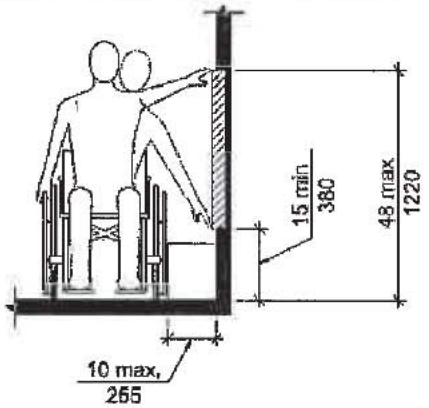

Fig. 308.3.1 Unobstructed Side Reach

308.3.2 Obstructed High Reach. Where a clear floor space allows a parallel approach to an object and the high side reach is over an obstruction, the height of the obstruction shall be 34 inches (865 mm) maximum and the depth of the obstruction shall be 24 inches (610 mm) maximum. The high side reach shall be 48 inches (1220 mm) maximum for a reach depth of 10 inches (255 mm) maximum. Where the reach depth exceeds 10 inches (255 mm), the high side reach shall be 46 inches (1170 mm) maximum for a reach depth of 24 inches (610 mm) maximum.

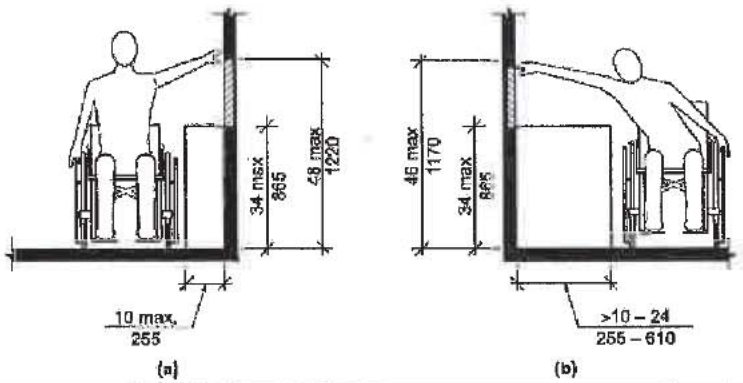

PASSERO ASSOCIATES
engineering architecture

		Fig. 308.3.2 Obstructed High Side Reach **309 Operable Parts** **309.1 General.** Operable parts required to be accessible shall comply with Section 309. **309.2 Clear Floor Space.** A clear floor space complying with Section 305 shall be provided. **309.3 Height.** Operable parts shall be placed within one or more of the reach ranges specified in Section 308. **309.4 Operation.** Operable parts shall be operable with one hand and shall not require tight grasping, pinching, or twisting of the wrist. The force required to activate operable parts shall be 5.0 pounds (22.2 N) maximum. **EXCEPTION:** Gas pump nozzles shall not be required to provide operable parts that have an activating force of 5.0 pounds (22.2 N) maximum.
44	2010 NYS ECCC & IECC 2012	**2010 NYS ECCC** **SECTION 101 SCOPE AND GENERAL REQUIREMENTS** **101.4 Applicability.** The provisions of this code shall apply to the construction of buildings. This code shall apply as provided in this Section 101.4. Where, in any specific case, different sections of this code specify different materials, methods of construction or other requirements, the most restrictive shall govern. Where there is a conflict between a general requirement and a specific requirement, the specific requirement shall govern. **101.4.1 Existing buildings.** Except as specified in this chapter, this code shall not be used to require the removal, *alteration* or abandonment of, nor prevent the continued use and maintenance of, an existing building or building system lawfully in existence at the time of adoption of this code. **101.4.3 Additions, alterations or renovations.** It is intended that this code apply to additions, alterations, and renovations to existing residential building in all cases where the 2009 IECC would apply, and that this code shall apply to additions, alterations and renovations to existing commercial buildings in all cases where ASHRAE 90.1-2007 would apply. Additions, alterations or renovations to an existing building, building system or portion thereof shall conform to the provisions of this code as they relate to new construction without requiring the unaltered portion(s) of the existing building or building system to comply with this code. Additions, alterations or renovations shall not create an unsafe or hazardous condition or overload existing building systems. An addition shall be deemed to comply with this code if (1) the addition alone complies with this code, or (2) the existing building and addition considered as a single building comply with this code. **Exceptions:** The following need not comply with the provisions of this code, provided the energy use of the building is not increased: 1. Storm windows installed over existing fenestration. 2. Glass only replacements in an existing sash and frame, provided the *U*-factor and the solar heat gain coefficient (SHGC) will be equal to or lower than before the glass replacement. 3. Alterations, renovations or repairs to roof/ceiling, wall or floor cavities which are insulated to full depth with insulation having a minimal nominal value of R-3.0/inch. 4. Alterations, renovations or repairs to walls and floors, where the existing structure is without framing cavities and no new framing cavities are

PASSERO ASSOCIATES
engineering architecture

		created. 5. Reroofing where neither the sheathing nor the insulation is exposed. Roofs without insulation in the cavity and where the sheathing or insulation is exposed during reroofing shall be insulated either above or below the sheathing. 6. Replacement of existing doors that separate *conditioned space* from the exterior shall not require the installation of a vestibule or revolving door, provided, however, that an existing vestibule that separates a *conditioned space* from the exterior shall not be removed. 7. An alteration that replaces less than 50 percent of the luminaires in a space, provided that such alteration does not increase the installed interior lighting power. 8. An alteration that replaces only the bulb and ballast within the existing luminaires in a space, provided that such *alteration* does not increase the installed interior lighting power. **101.4.4 Change in occupancy or use.** Spaces undergoing a change in occupancy that would result in an increase in demand for either fossil fuel or electrical energy shall comply with this code. Where the use in a space changes from one use in Table 505.5.2 to another use in Table 505.5.2, the installed lighting wattage shall comply with Section 505.5. **101.4.5 Change in space conditioning.** Any nonconditioned space that is altered to become conditioned space shall be required to be brought into full compliance with this code. **101.4.6 Statutory exemptions and limitations.** The provisions of sections 101.4.1, 101.4.2, 101.4.4, 101.4.5 and 101.4.6, of this code are subject to any provisions of Article 11 of the New York State Energy Law, as in effect at the time of adoption of this code and as thereafter amended from time to time, which may (1) require certain buildings to be exempt from this code or (2) limit the applicability of this code in the case of renovations of existing buildings. If the provisions of Article 11 of the New York State Energy Law, as in effect at the time of any alteration, renovation or repair to an existing building, require that such building be exempt from this code, then such alteration, renovation or repair to such building need not comply with this code. If the provisions of Article 11 of the New York State Energy Law, as in effect at the time of any alteration, renovation or repair to an existing building, limit the applicability of this code to such alteration, renovation or repair, then the applicability of this code to such alteration, renovation or repair shall be limited to the extent required by the provisions of Article 11 of the New York State Energy Law, as then in effect. **Example:** New York State Energy Law section 11-103(b), as in effect at the time of adoption of this code, provides that in the case of the renovation of an existing building, this code (1) shall apply only if the renovation is a "substantial renovation" (i.e., only if more than fifty percent of any "building subsystem" is replaced), and (2) shall apply only to that portion of the "building subsystem" which is being replaced. If New York State Energy Law section 11-103(b) remains in effect at the time of any alteration, renovation or repair to an existing building, the applicability of this code to such alteration, renovation or repair shall be limited to the extent required by said section 11-103(b).
45	2702.1	**SECTION 2702 EMERGENCY AND STANDBY POWER SYSTEMS [F]** **2702.1 Installation.** Emergency and standby power systems required by this code or the *Fire Code of New York State* shall be installed in accordance with this code, NFPA 110 and 111. **[F]** **2702.1.1 Stationary generators.** Emergency and standby power generators shall be listed in accordance with UL 2200. **[F]** **2702.2 Where required.** Emergency and standby power systems shall be provided where required by Sections 2702.2.1 through 2702.2.20. **[F]** **2702.2.2 Smoke control systems.** Standby power shall be provided for smoke control systems in accordance with Section 909.11. **[F]** **2702.2.3 Exit signs.** Emergency power shall be provided for exit signs in accordance with Section 1011.5.3. **[F]** **2702.2.4 Means of egress illumination.** Emergency power shall be provided for means of egress illumination in accordance with Section 1006.3. **[F]** **2702.3 Maintenance.** Emergency and standby power systems shall be maintained and tested in accordance with the *Fire Code of New York State.* **[F]**

PASSERO ASSOCIATES
engineering architecture

<table>
<tr><td>46</td><td>2702.2.2</td><td>2702.2.2 Smoke control systems. Standby power shall be provided for smoke control systems in accordance with Section 909.11. [F]</td></tr>
<tr><td>47</td><td>2902.1</td><td>SECTION 2902 MINIMUM PLUMBING FACILITIES

TABLE 2902.1 MINIMUM NUMBER OF REQUIRED PLUMBING FIXTURES[a] (See Sections 2902.2 and 2902.3) [P]
<table>
<tr><th rowspan="2">NO.</th><th rowspan="2">CLASSIFIC-ATION</th><th rowspan="2">OCCUP-ANCY</th><th rowspan="2">DESCRIP-TION</th><th colspan="2">WATER CLOSETS</th><th colspan="2">LAVATORIES</th><th rowspan="2">DRINKING FOUNTAINS</th><th rowspan="2">OTHER[f]</th></tr>
<tr><th>MALE</th><th>FEMALE</th><th>MALE</th><th>FEMALE</th></tr>
<tr><td>6</td><td>Mercantile (see Sections 2902.2, 2902.4, 2902.4.1 and 2902.4.2)</td><td>M</td><td>Retail stores, service stations, shops, salesrooms, markets and shopping centers</td><td>1 per 500</td><td>1 per 500</td><td>1 per 750</td><td>1 per 750</td><td>1 per 1,000</td><td>1 service sink</td></tr>
</table>
2902.1.1 Unisex toilet and bath fixtures. Fixtures located within unisex toilet bathing rooms complying with Chapter 11 of this Code are permitted to be included in determining the minimum required number of fixtures for assembly and mercantile occupancies. [P]
2902.2 Separate facilities. Where plumbing fixtures are required, separate facilities shall be provided for each sex. [P]

Exceptions:

2. Separate facilities shall not be required in structures or tenant spaces with a total occupant load, including both employees and customers, of 15 or less.
3. Separate facilities shall not be required in mercantile occupancies in which the maximum occupant load is 50 or less.</td></tr>
</table>

Appendix B: Architectural Program

A SEPARATE "APPENDIX B" SHALL BE COMPLETED FOR EACH SEPARATE BUILDING AND/OR FACILITY INCLUDED IN THE ORGANIZATION'S BUSINESS PLAN

COMPANY INFORMATION

Business Name:	Citiva Medical
Facility Type:	Manufacturing Facility ☐ Dispensing Facility ☑
Use and Occupancy Classification:	Mercantile
Building Construction Type and Classification:	VB
Facility Address:	2290 South Rd Poughkeepsie, NY
Primary Contact Telephone number:	Michael Caridi 1-516-852-2549
Primary Contact Fax number:	mcaridi@citivamedical.com

PART I – ARCHITECTURAL PROGRAM & CONSTRUCTION TIMELINE:

Applicant shall identify planning requirements, including but not limited to:

- ☐ TOWN BOARD APPROVAL
- ☑ PLANNING BOARD APPROVAL
- ☐ ZONING BOARD OF APPEALS APPROVAL
- ☑ PREPARATION OF CONSTRUCTION DOCUMENTS
- ☑ BUILDING PERMIT
- ☑ BIDDING PHASE
- ☑ CONTRACT AWARD PHASE PER EACH APPLICABLE CONTRACTOR (Identify all that apply)
- ☑ COMMENCEMENT OF CONSTRUCTION
- ☑ COMPLETION OF CONSTRUCTION

Appendix B – Architectural Program

PART II – SITE PLAN(S)

Applicant shall provide the appropriate details for each of the following by identifying the location and dimension on the Site Plan attached to the application for each building location.

- ☑ Entrance and Exits
- ☑ Public Parking Spaces
- ☑ Staff Parking Spaces
- ☑ Accessible Parking Spaces
- ☑ Accessible Route(s)
- ☑ Fire Lane and/or Fire Apparatus Road
- ☑ Percentage of Green Space
- ☑ Location of Emergency Power Systems
- ☑ Loading & Unloading
- ☑ Security Gates & Fences

PART III – ENERGY SOURCES & ENGINEERING SYSTEMS:

Applicant shall provide the following minimum information to outline the specifications relating to the energy sources and engineering systems of each building included in the application.

Energy Source:
☑ Natural Gas ☐ Oil ☑ Electric
☐ Solar ☐ Other _____

Engineering Systems:
☑ Heating System: Type Gas, Size Varies Efficiency 80% e.t.,
Ventilation Requirements NYSMC Occupancy Compliance
☑ Cooling System: Type dx coolin, Size Varies Efficiency 9.5-13 SEER
Ventilation Requirements NYSMC Occupancy Compliance
☑ Ventilation & Humidification Systems:
Type Ultrasoni, Size Varies, Efficiency 100%,
Ventilation Requirements NYSMC Occupancy Compliance
☑ Electrical Distribution Available Yes On-Site
☑ Water Supply: Municipal Water Service X or Private Well Water _____
☑ Sewage: Municipal Sewer System X or Private Septic System _____
☑ Emergency Power System:
Type NG, Size Varies Efficiency 60-80%,

Appendix B – Architectural Program

PART IV – BUILDING CODE COMPLIANCE: (pages 3-13)

CHECK ALL APPLICABLE CODES FOR THE FACILITY

- [x] 2010 BUILDING CODE OF NYS
- [x] 2010 FIRE CODE OF NYS
- [x] 2010 PLUMBING CODE OF NYS
- [x] 2010 MECHANICAL CODE OF NYS
- [x] 2010 FUEL GAS CODE OF NYS
- [x] 2010 PROPERTY MAINTENANCE CODE OF NYS
- [x] 2010 ENERGY CONSERVATION CONSTRUCTION CODE OF NYS
- [x] 2012 IECC COMMERCIAL PROVISIONS
- [x] 2010 EXISTING BUILDING CODE OF NYS
- [x] NEC NATIONAL ELECTRIC CODE, (Specify Applicable Version)
- [ ] 2014 NY CITY CONSTRUCTION CODE
- [ ] 2008 NY CITY CONSTRUCTION CODE
- [ ] 1968 NY CITY CONSTRUCTION CODE
- [x] NFPA 101-06 LIFE SAFETY CODE
- [x] ICC/ANSI A117.1-03 ACCESSIBLE AND USABLE BUILDINGS AND FACILITIES
- [x] OTHER

Appendix B – Architectural Program

Select Project Type:
Check all that apply. Refer to the Existing Building Code for definitions.

- ☐ New Building
- ☐ Repair
- ☐ Alteration Level 1
- ☐ Alteration Level 2
- ☑ Alteration Level 3
- ☑ Change of Occupancy
- ☐ Addition
- ☐ Historic Building
- ☐ Demolition
- ☐ Chapter 3. Prescriptive Compliance Method
- ☐ Chapter 13. Performance Compliance Method

Select Work Involved:
Check all that apply.

- ☑ General Construction
- ☐ Roofing
- ☐ Asbestos Abatement/Environmental
- ☑ Fire Alarm
- ☑ Structural
- ☑ Mechanical
- ☑ Plumbing
- ☑ Electrical
- ☐ Site Work
- ☐ Sprinkler
- ☐ Elevators
- ☐ Other:_____

CODE COMPLIANCE REVIEW

Applicant shall provide all applicable information in regards to the code topic and section listed below.

1. Code Compliance Review is based on the 2010 NY State Building Code for New Construction. If any other building code applies to the location or type of construction, provide applicable code and sections that most closely relates and references the code topic and information in the code sections listed below. Provide appropriate abbreviations for other applicable codes, such as: FC: ***Fire Code***, PC: ***Plumbing Code***, MC: ***Mechanical Code***, FGC: ***Fuel Gas Code***, ECCC: ***Energy Conservation Code.***
2. Provide the Required standard for each applicable code section. (i.e.: area, quantity, classification type, materials, hourly separation, etc.). If section does not apply, indicate one of the following with explanation: **NA:** *Not Applicable*, **NR:** *Not Required*, **NP:** *Not Permitted*
3. Provide your facilities "Actual" value for each required standard as per applicable code section.

No.	Topic	NYS Building Code Section	Other Code[1] (as Stated Above) & Section	Minimum Information Required to be Identified for this building/facility on the Building or Site Plan(s)	Required Code Value[2] /Allowed Code Value	Facility's Actual Value[3]
1	Use & Occupancy Classification	302.1 - 312		Use & occupancy of this facility. Identify all applicable materials, class and quantities regarding Table 307.1.	Mercantile	Mercantile

Appendix B – Architectural Program

No.	Topic	NYS Building Code Section	Other Code[1] (as Stated Above) & Section	Minimum Information Required to be Identified for this building/facility on the Building or Site Plan(s)	Required Code Value[2] /Allowed Code Value	Facility's Actual Value[3]
2	Combustible Storage	413		All combustible storage areas and rooms, as per applicable Building and Fire Codes. Identify all combustible stored materials, area and room dimensions, all required fire separations, and exit requirements.	N/A	N/A
3	Hazardous Materials	414		All hazardous materials stored or used as per applicable Building and Fire Codes. Identify all combustible stored materials, area and room dimensions, all required fire separations, and exit requirements.	N/A	N/A
4	Hazardous Materials Control Areas	414.2		Provide additional information indicating number, size, materials stored, and quantity of each material.	N/A	N/A
5	Building Area & Height	501-507		Provide the building area & height Provide all calculations and cite applicable code sections for increased Building Area & Heights allowed per building code(s).	1 Story 9,000 SF	1 Story 2,150 SF
6	Incidental Use Areas	508.2		Identify all Incidental Use Areas and required fire separation of occupancies on Building Plans.	N/A	N/A

Appendix B – Architectural Program

No.	Topic	NYS Building Code Section	Other Code[1] (as Stated Above) & Section	Minimum Information Required to be Identified for this building/facility on the Building or Site Plan(s)	Required Code Value[2] /Allowed Code Value	Facility's Actual Value[3]
7	Mixed Occupancies	508.3		Provide analysis with code cited, and required fire separation of occupancies. Identify required fire separation of occupancies on Building Plan(s).	All applicable sections Refer to attached for details	Fully compliant Mercantile / Buisness
8	Nonseparated Uses	508.3.2		Provide analysis with code cited, and required fire separation of occupancies. Identify required fire separation of occupancies on Building Plan(s).	All applicable sections Refer to attached for details	Fully compliant Mercantile / Buisness - Accessory Storage
9	Separated Uses (Ratio < 1)	508.3.3		Provide analysis with code cited, and required fire separation of occupancies. Identify required fire separation of occupancies on Building Plan(s).	N/A	N/A
10	Construction Classification	602		Provide Construction Classification per each building included in Application.	VB	VB
11	Fire Resistance Rating Reqm't for Building Elements	Table 601		Provide Fire Resistance Rating per each building element as per Table 601. Identify rating & elements on Building Plans.	0-hr	0-hr

Appendix B – Architectural Program

No.	Topic	NYS Building Code Section	Other Code[1] (as Stated Above) & Section	Minimum Information Required to be Identified for this building/facility on the Building or Site Plan(s)	Required Code Value[2] /Allowed Code Value	Facility's Actual Value[2]
12	Exterior Wall Fire-Resistance Rating	Table 602		Identify required fire resistance rating of exterior walls on Building Plan(s).	0-hr Refer to attached for details	0-hr
13	Exterior Fire Separation Distance	Table 602		Identify required fire separation distance of exterior walls between Buildings on Plan.	Refer to attached for details	Greater than 30 ft.
14	Fire Walls	705		Provide code information and identify all applicable required Fire Wall(s) and fire resistance requirement on Building Plans.	N/A	N/A
15	Fire Barriers	706		Provide code information and identify all applicable required Fire Barrier(s) and fire resistance requirement on Building Plans.	Refer to attached for details	Tenant demising wall See floor plans
16	Shaft Enclosures	707		Provide code information and identify all applicable required Shaft Wall(s) and fire resistance requirement on Building Plans.	N/A	N/A
17	Fire Partitions	708		Provide code information and identify all applicable required Fire Partition(s) and fire resistance requirement on Building Plans.	N/A	N/A

Appendix B – Architectural Program

No.	Topic	NYS Building Code Section	Other Code[1] (as Stated Above) & Section	Minimum Information Required to be Identified for this building/facility on the Building or Site Plan(s)	Required Code Value[2] /Allowed Code Value	Facility's Actual Value[3]
18	Horizontal Assemblies	711		Provide code information and identify all applicable required Horizontal Assemblies and fire resistance requirement on Building Plans.	N/A	N/A
19	Fire Protection: Sprinkler System	903		Indicate Type of Sprinkler System: ☐ NFPA 13 ☐ NFPA 13 R ☐ NFPA 13D Provide code information of all applicable requirements for Automatic Sprinkler Systems with code section cited.	N/A	N/A
20	Alt. Fire Extinguishing System	904		Provide code information of all applicable requirements for Alternative Automatic Fire-Extinguishing Systems with code section(s) cited.	N/A	N/A
21	Standpipe System	905		Provide code information of all applicable requirements for Standpipe Systems with code section(s) cited.	N/A	N/A
22	Fire Alarm & Detection Systems	907		Provide code information of all applicable requirements for Fire Alarm System(s) with code section cited. Indicate Type of Fire Alarm System ☑ Addressable ☐ Hardwired (zoned)	All applicable sections Refer to attached for details	Fully compliant

Appendix B – Architectural Program

No.	Topic	NYS Building Code Section	Other Code[1] (as Stated Above) & Section	Minimum Information Required to be Identified for this building/facility on the Building or Site Plan(s)	Required Code Value[2] /Allowed Code Value	Facility's Actual Value[3]
23	Emergency Alarm System	908		Provide code information of all applicable requirements for Emergency Alarm Systems with code section cited.	N/A	N/A
24	Fire Department Connections	912		Identify Fire Department connections in accordance with NFPA applicable standard.	All applicable sections. Refer to attached for details	Fully compliant
25	Exits	1001.1 &2		Identify on the Building Plans and documents, per each door, the following information: door width, door height, direction of swing, type of construction, hourly rating, and door closures.	All applicable sections Refer to attached for details	See plans
26	Occupant Load	1004 & Table 1004.1.1		Identify the use/name of each room, dimensions of each room, and Occupant Loads per each room on the Building Plans.	Values per table 1004.1.1 Refer to attached for details	55
27	Egress Width	1005		Provide egress widths & cite applicable code section(s) and requirement(s) on the Building Plans	11" min. per table 1005.1 32" clear doors	36" min. door openings, see plans
28	Accessible Means of Egress	1007.1		Provide accessible means of egress as per Section 1007 & cite applicable code section(s) and requirement(s) on the Building Plans.	(2) Means of Egress Refer to attached for details	(2) Means of Egress All means of egress to meet req.'s of section 1007

Appendix B – Architectural Program

No.	Topic	NYS Building Code Section	Other Code[1] (as Stated Above) & Section	Minimum Information Required to be Identified for this building/facility on the Building or Site Plan(s)	Required Code Value[2] /Allowed Code Value	Facility's Actual Value[3]
29	Doors, Gates, and Turnstiles	1008		Means of egress doors shall meet the requirements of this section.	Refer to attached for details	See plans
30	Interior Stairs	1009		Identify the following information for each stairway on the Building Plan(s): the width of stairways; the height, width, depth and number of risers and treads; dimensions of landings; stairway construction type; and handrail height.	N/A	N/A
31	Ramps	1010.1		Identify the following information of each ramp, on the Building Plan(s): width; total vertical rise; length of ramp; and handrail height.	N/A	N/A
32	Common Path of Travel	1014.3		Identify on the Building Plan(s): the length of the "Common Path of Travel" per each room as per applicable building code requirements.	75'-0" max.	36'-0"
33	Exit Doorway Arrangement	1015		Identify on the Building Plan(s): applicable building code requirements for all Exits and Exit Access Doorways per each room and required exits in all buildings.	All applicable sections Refer to attached for details	See plans
34	Corridor Fire Rating	1017.1		Identify, on the Building Plan(s): all corridors with required fire resistance and the applicable fire rating.	All applicable sections. Refer to attached for details	See plans

Appendix B – Architectural Program

No.	Topic	NYS Building Code Section	Other Code[1] (as Stated Above) & Section	Minimum Information Required to be Identified for this building/facility on the Building or Site Plan(s)	Required Code Value[2] /Allowed Code Value	Facility's Actual Value[3]
35	Corridor Width	1017.2		Identify on the Building Plan(s): the width of all corridors. Provide applicable code section(s) and requirement(s).	44" min. per section 1017.2	67"
36	Dead End Corridor	1017.3		Corridors shall not exceed the maximum dead end corridor length as per applicable code.	20'-0" max.	N/A
37	Number of Exits and Continuity	1019		Identify on the Building Plan(s): required number of exits, continuity and arrangement as per the applicable code requirements.	2 min.	2
38	Vertical Exit Enclosures	1020		Identify on the Building Plan(s): all applicable code requirements for each Vertical Exit Enclosure.	N/A	N/A
39	Exit Passageways	1021		Identify on the Building Plan(s): all applicable code requirements for each Exit Passageway.	All applicable sections Refer to attached for details	See plans
40	Horizontal Exits	1022		Identify on the Building Plan(s): all applicable code requirements for each Horizontal Exit.	All applicable sections	See plans

Appendix B – Architectural Program

No.	Topic	NYS Building Code Section	Other Code[1] (as Stated Above) & Section	Minimum Information Required to be Identified for this building/facility on the Building or Site Plan(s)	Required Code Value[2] /Allowed Code Value	Facility's Actual Value[2]
41	Exterior Exit Ramps & Stairways	1023		Identify on the Building Plan(s): all applicable code requirements for each exterior exit ramps and stairways.	N/A	N/A
42	Exit Discharge	1024		Identify on the Building Plan(s): all applicable code requirements for each Exit Discharge.	N/A	N/A
43	Accessibility	1101.1 - 1110 & ICC/A117. 1(03)		Identify on the Building Plan(s): all applicable code requirements such that the design and construction of each building/facility provides accessibility to physically disabled persons.	All applicable sections Refer to attached for details	Fully compliant
44	Energy Conservation	2010 NYS ECCC & IECC 2012		Identify the R-Value and U-Value of each construction component and assembly of the building envelope as required in the applicable energy and building code(s).	All applicable sections Refer to attached for details	Fully compliant
45	Emergency & Standby Power	2702.1		Identify emergency & Standby Power locations and specifications of the system to be provided.	All applicable sections Refer to attached for details	Fully compliant
46	Smoke Control Systems	2702.2.2		Identify the Standby power for smoke control systems in accordance with Section 909.11 of NYS Building Code.	All applicable sections Refer to attached for details	Fully compliant

Appendix B – Architectural Program

No.	Topic	NYS Building Code Section	Other Code[1] (as Stated Above) & Section	Minimum Information Required to be Identified for this building/facility on the Building or Site Plan(s)	Required Code Value[2] /Allowed Code Value	Facility's Actual Value[3]
47	Plumbing Fixture Count	2902.1		Identify on the Building Plan(s): the minimum plumbing facilities as per applicable plumbing code(s).	1 for each. Refer to attached for details	1 for each
48	Available Street Water Pressure			Provide the available street or well water pressure.		98 psi
49	Fire Apparatus Access Road	FC503.1		Identify on the Site Plan: Fire Apparatus Road, Fire Lane and other Fire Service requirements per applicable Building and Fire Codes.	All applicable sections	Fully compliant

PASSERO ASSOCIATES
engineering architecture

<table>
<tr><th>NO.</th><th>NYS BUILDING CODE SECTION</th><th>REQUIRED CODE VALUE / ALLOWED CODE VALUE</th></tr>
<tr><td>7</td><td>508.3</td><td>508.3 Mixed occupancies. Each portion of a building shall be individually classified in accordance with Section 302.1.
Where a building contains more than one occupancy group, the building or portion thereof shall comply with Sections 508.3.1, 508.3.2, 508.3.3 or a combination of these sections.
Exceptions:
1. Occupancies separated in accordance with Section 509.</td></tr>
<tr><td>8</td><td>508.3.2</td><td>508.3.2 Nonseparated occupancies. Buildings or portions of buildings that comply with the provisions of this section shall qualify as nonseparated occupancies.</td></tr>
<tr><td>12</td><td>Table 602</td><td>TABLE 602 FIRE-RESISTANCE RATING REQUIREMENTS FOR EXTERIOR WALLS BASED ON FIRE SEPARATION DISTANCE[a, e]
<table>
<tr><th>FIRE SEPARATION DISTANCE = X (feet)</th><th>TYPE OF CONSTRUCTION</th><th>OCCUPANCY GROUP M</th></tr>
<tr><td>X<5[c]</td><td>All</td><td>2</td></tr>
<tr><td rowspan="2">5>X<10</td><td>IA</td><td>2</td></tr>
<tr><td>Others</td><td>1</td></tr>
<tr><td rowspan="3">10>X<30</td><td>IA, IB</td><td>1</td></tr>
<tr><td>IIB, VB</td><td>0</td></tr>
<tr><td>Others</td><td>1</td></tr>
<tr><td>X>30</td><td>All</td><td>0</td></tr>
</table>
a. Load-bearing exterior walls shall also comply with the fire-resistance rating requirements of Table 601.
b. For special requirements for Group U occupancies see Section 406.1.2
c. See Section 705.1.1 for party walls.
d. Open parking garages complying with Section 406 shall not be required to have a fire-resistance rating.
e. The fire-resistance rating of an exterior wall is determined based upon the fire separation distance of the exterior wall and the story in which the wall is located.</td></tr>
<tr><td>15</td><td>706</td><td>SECTION 706 FIRE BARRIERS</td></tr>
</table>

PASSERO ASSOCIATES
engineering architecture

706.1 General. Fire barriers installed as required elsewhere in this code or the *Fire Code of New York State* shall comply with this section.
706.2 Materials. Fire barriers shall be of materials permitted by the building type of construction.

706.2.1 Fire-resistance-rated glazing. Fire-resistance-rated glazing, when tested in accordance with ASTM E 119 and complying with the requirements of Section 706, shall be permitted. Fire-resistance-rated glazing shall bear a label or other identification showing the name of the manufacturer, the test standard and the identifier "W-XXX," where the "XXX" is the fire-resistance rating in minutes. Such label or identification shall be issued by an approved agency and shall be permanently affixed to the glazing.

706.3 Fire-resistance rating. The fire-resistance rating of fire barriers shall comply with this section.

706.3.8 Separation of mixed occupancies. Where the provisions of Section 508.3.3 are applicable, the fire barrier separating mixed occupancies shall have a fire-resistance rating of not less than that indicated in Section 508.3.3 based on the occupancies being separated.
706.3.9 Fire areas. The fire barrier or horizontal assembly, or both, separating a single occupancy into different fire areas shall have a fire-resistance rating of not less than that indicated in Table 706.3.9. The fire barriers or horizontal assemblies, or both, separating fire areas of mixed occupancies shall have a fire-resistance rating of not less than the highest value indicated in Table 706.3.9 for the occupancies under consideration.

TABLE 706.3.9 FIRE-RESISTANCE RATING REQUIREMENTS FOR FIRE BARRIER ASSEMBLIES BETWEEN FIRE AREAS

OCCUPANCY GROUP	FIRE-RESISTANCE RATING (hours)
A, B, E, F-2, H-4, H-5, I, M, R, S-2	2

706.4 Exterior walls. Where exterior walls serve as a part of a required fire-resistance-rated shaft or exit enclosure or separation, such walls shall comply with the requirements of Section 704 for exterior walls and the fire-resistance-rated enclosure requirements shall not apply.

Exception: Exterior walls required to be fire-resistance rated in accordance with Section 1014.5.1 for exterior egress balconies, Section 1020.1.4 for exit enclosures and Section 1023.6 for exterior exit ramps and stairways.

706.5 Continuity. Fire barriers shall extend from the top of the floor/ceiling assembly below to the underside of the floor or roof slab or deck above and shall be securely attached thereto. Such fire barriers shall be continuous through concealed spaces, such as the space above a suspended ceiling. The supporting construction for fire barrier walls shall be protected to afford the required fire-resistance rating of the fire barrier supported, except for 1-hour fire-resistance-rated incidental use area separations as required by Table 508.2 in buildings of Type IIB, IIIB and VB construction. Hollow vertical spaces within a fire barrier shall be fireblocked in accordance with Section 717.2 at every floor level.

Exceptions:

1. The maximum required fire-resistance rating for assemblies supporting fire barriers separating tank storage as provided for in Section 415.6.2.1

PASSERO ASSOCIATES
engineering architecture

		shall be 2 hours, but not less than required by Table 601 for the building construction type. 2. Shaft enclosures shall be permitted to terminate at a top enclosure complying with Section 707.12. **706.7 Openings.** Openings in a fire barrier wall shall be protected in accordance with Section 715. Openings shall be limited to a maximum aggregate width of 25 percent of the length of the wall, and the maximum area of any single opening shall not exceed 156 square feet (15 m²). Openings in exit enclosures and exit passageways shall also comply with Sections 1020.1.1 and 1021.4, respectively. **Exceptions:** 1. Openings shall not be limited to 156 square feet (15 m²) where adjoining fire areas are equipped throughout with an automatic sprinkler system in accordance with Section 903.3.1.1. 2. Fire doors serving an exit enclosure. 3. Openings shall not be limited to 156 square feet (15 m²) or an aggregate width of 25 percent of the length of the wall where the opening protective assembly has been tested in accordance with ASTM E 119 and has a minimum fire-resistance rating not less than the fire-resistance rating of the wall. 4. Fire windows permitted in atrium separation walls shall not be limited to a maximum aggregate width of 25 percent of length of the wall. **706.8 Penetrations.** Penetrations of fire barriers shall comply with Section 712. **706.8.1 Prohibited penetrations.** Penetrations into an exit enclosure or an exit passageway shall be allowed only when permitted by Section 1020.1.2 or 1021.5, respectively. **706.9 Joints.** Joints made in or between fire barriers shall comply with Section 713. **706.10 Ducts and air transfer openings.** Penetrations in a fire barrier by ducts and air transfer openings shall comply with Section 716.
22	907	**SECTION 907 FIRE ALARM AND DETECTION SYSTEMS** **907.1 General.** This section covers the application, installation, performance and maintenance of fire alarm systems and their components. **[F]** **907.1.1 Construction documents.** Construction documents for fire alarm systems shall be submitted for review and approval prior to system installation. Construction documents shall include, but not be limited to, all of the following: **[F]** 1. A floor plan which indicates the use of all rooms. 2. Locations of alarm-initiating and notification appliances. 3. Alarm control and trouble signaling equipment. 4. Annunciation. 5. Power connection. 6. Battery calculations. 7. Conductor type and sizes. 8. Voltage drop calculations. 9. Manufacturers, model numbers and listing information for equipment, devices and materials. 10. Details of ceiling height and construction. 11. The interface of fire safety control functions. **907.1.2 Equipment.** Systems and their components shall be listed and approved for the purpose for which they are installed. **[F]** **907.2 Where required-new buildings and structures.** An approved manual fire alarm system, automatic fire detection system or automatic heat

detection system installed in accordance with the provisions of this code and NFPA 72 shall be provided in new buildings and structures in accordance with Sections 907.2.1 through 907.2.23 and provide occupant notification in accordance with Section 907.9, unless other requirements are provided by another section of this code. Where automatic sprinkler protection installed in accordance with Section 903.3.1.1 or 903.3.1.2 is provided and connected to the building fire alarm system, automatic heat detection required by this section shall not be required.

The automatic fire detectors shall be smoke detectors. Where ambient conditions prohibit installation of automatic smoke detection, other automatic fire detection shall be allowed.

907.2.7 Group M. A manual fire alarm system shall be installed in Group M occupancies having an occupant load of 500 or more persons or more than 100 persons above or below the lowest level of exit discharge. The initiation of a signal from a manual fire alarm box shall initiate alarm notification appliances as required by Section 907.9. **[F]**

Exceptions:
1. Covered mall buildings complying with Section 402.
2. Manual fire alarm boxes are not required where the building is equipped throughout with an automatic sprinkler system and the alarm notification appliances will automatically activate upon sprinkler water flow.

907.2.7.1 Occupant notification. During times that the building is occupied, the initiation of a signal from a manual fire alarm box or from a water flow switch shall not be required to activate the alarm notification appliances when an alarm signal is activated at a constantly attended location from which evacuation instructions shall be initiated over an emergency voice/alarm communication system installed in accordance with Section 907.2.12.2.

The emergency voice/alarm communication system shall be allowed to be used for other announcements provided the manual fire alarm use takes precedence over any other use.

907.2.7.2 Fire detection. Areas of Group M buildings that are not protected by an automatic sprinkler system and that have an occupant load of more than 100 persons shall be provided with automatic smoke detection or automatic heat detection installed in accordance with NFPA 72.

907.2.10 Single- and multiple-station smoke alarms. Listed single- and multiple-station smoke alarms complying with UL 217 shall be installed in accordance with the provisions of this code and the household fire-warning equipment provisions of NFPA 72. **[F]**

907.2.10.1 Where required. Single- or multiple-station smoke alarms shall be installed in the locations described in Sections 907.2.10.1.1 through 907.2.10.1.3. **[F]**

907.2.10.2 Power source. In new construction, required smoke alarms shall receive their primary power from the building wiring where such wiring is served from a commercial source and shall be equipped with a battery backup. Smoke alarms shall emit a signal when the batteries are low. Wiring shall be permanent and without a disconnecting switch other than as required for overcurrent protection. **[F]**

907.2.10.4 Acceptance testing. When the installation of the alarm devices is complete, each detector and interconnecting wiring for multiple-station alarm devices shall be tested in accordance with the household fire warning equipment provisions of NFPA 72. **[F]**

907.2.15 Delayed egress locks. Where delayed egress locks are installed on means of egress doors in accordance with Section 1008.1.8.6, an automatic smoke or heat detection system shall be installed as required by that section. **[F]**

907.3 Manual fire alarm boxes. Manual fire alarm boxes shall be installed in accordance with Sections 907.3.1 through 907.3.5. **[F]**

907.3.1 Location. Manual fire alarm boxes shall be located not more than 5 feet (1524 mm) from the entrance to each exit. Additional manual fire alarm boxes shall be located so that travel distance to the nearest box does not exceed 200 feet (60 960 mm). **[F]**

Exception: In buildings protected by an automatic sprinkler system in accordance with 903.3.1.1 or 903.3.1.2, the travel distance to the nearest

box shall not apply.

907.3.2 Height. The height of the manual fire alarm boxes shall be a minimum of 42 inches (1067 mm) and a maximum of 48 inches (1219 mm), measured vertically, from the floor level to the activating handle or lever of the box. **[F]**

907.3.3 Color. Manual fire alarm boxes shall be red in color. **[F]**

907.3.4 Signs. Where fire alarm systems are not monitored by a supervising station, an approved permanent sign shall be installed adjacent to each manual fire alarm box that reads: WHEN ALARM SOUNDS-CALL FIRE DEPARTMENT. **[F]**

Exception: Where the manufacturer has permanently provided this information on the manual fire alarm box.

907.3.5 Protective covers. The code enforcement official is authorized to require the installation of listed manual fire alarm box protective covers to prevent malicious false alarms or to provide the manual fire alarm box with protection from physical damage. The protective cover shall be transparent or red in color with a transparent face to permit visibility of the manual fire alarm box. Each cover shall include proper operating instructions. A protective cover that emits a local alarm signal shall not be installed unless approved. **[F]**

907.4 Power supply. The primary and secondary power supply for the fire alarm system shall be provided in accordance with NFPA 72.

907.5 Wiring. Wiring shall comply with the requirements of NFPA 70 and NFPA 72. Wireless protection systems utilizing radio-frequency transmitting devices shall comply with the special requirements for supervision of low-power wireless systems in NFPA 72. **[F]**

907.6 Activation. Where an alarm notification system is required by another section of this code, it shall be activated by: **[F]**

1. A required automatic fire alarm system.
2. Sprinkler water-flow devices.
3. Required manual fire alarm boxes.

907.8 Zones. Each floor shall be zoned separately and a zone shall not exceed 22,500 square feet (2090 m^2). The length of any zone shall not exceed 300 feet (91 440 mm) in any direction. **[F]**

Exception: Automatic sprinkler system zones shall not exceed the area permitted by NFPA 13.

907.8.1 Zoning indicator panel. A zoning indicator panel and the associated controls shall be provided in an approved location. The visual zone indication shall lock in until the system is reset and shall not be canceled by the operation of an audible alarm-silencing switch. **[F]**

907.9 Alarm notification appliances. Alarm notification appliances shall be provided and shall be listed for their purpose. **[F]**

907.9.1 Visible alarms. Visible alarm notification appliances shall be provided in accordance with Sections 907.9.1.1 through 907.9.1.4. **[F]**

Exceptions:
1. Visible alarm notification appliances are not required in alterations, except where an existing fire alarm system is upgraded or replaced, or a new fire alarm system is installed.
2. Visible alarm notification appliances shall not be required in exits as defined in Section 1002.1.

907.9.1.1 Public and common areas. Visible alarm notification appliances shall be provided in public areas and common areas. **[F]**

907.9.1.2 Employee work areas. Where employee work areas have audible alarm coverage, the notification appliance circuits serving the employee work areas shall be initially designed with a minimum of 20 percent spare capacity to account for the potential of adding visible notification appliances in the future to accommodate hearing impaired employees. **[F]**

907.9.2 Audible alarms. Audible alarm notification appliances shall be provided and shall sound a distinctive sound that is not to be used for

PASSERO ASSOCIATES
engineering architecture

any purpose other than that of a fire alarm. The audible alarm notification appliances shall provide a sound pressure level of 15 decibels (dBA) above the average ambient sound level or 5 dBA above the maximum sound level having a duration of at least 60 seconds, whichever is greater, in every occupied space within the building. The minimum sound pressure levels shall be: 70 dBA in occupancies in Groups R and I-1; 90 dBA in mechanical equipment rooms and 60 dBA in other occupancies. The maximum sound pressure level for audible alarm notification appliances shall be 120 dBA at the minimum hearing distance from the audible appliance. Where the average ambient noise is greater than 105 dBA, visible alarm notification appliances shall be provided in accordance with NFPA 72 and audible alarm notification appliances shall not be required. **[F]**

Exception: Visible alarm notification appliances shall be allowed in lieu of audible alarm notification appliances in critical-care areas of Group I-2 occupancies.

907.10 Fire safety functions. Automatic fire detectors utilized for the purpose of performing fire safety functions shall be connected to the building's fire alarm control panel where a fire alarm system is required by Section 907.2. Detectors shall, upon actuation, perform the intended function and activate the alarm notification appliances or a visible and audible supervisory signal at a constantly attended location. In buildings not required to be equipped with a fire alarm system, the automatic fire detector shall be powered by normal electrical service and, upon actuation, perform the intended function. The detectors shall be located in accordance with NFPA 72. **[F]**

907.11 Duct smoke detectors. Duct smoke detectors shall be connected to the building's fire alarm control panel when a fire alarm system is provided. Activation of a duct smoke detector shall initiate a visible and audible supervisory signal at a constantly attended location. Duct smoke detectors shall not be used as a substitute for required open-area detection. **[F]**

Exceptions:

1. The supervisory signal at a constantly attended location is not required where duct smoke detectors activate the building's alarm notification appliances.
2. In occupancies not required to be equipped with a fire alarm system, actuation of a smoke detector shall activate a visible and audible signal in an approved location. Smoke detector trouble conditions shall activate a visible or audible signal in an approved location and shall be identified as air duct detector trouble.

907.12 Access. Access shall be provided to each detector for periodic inspection, maintenance and testing. **[F]**

907.13 Fire-extinguishing systems. Automatic fire-extinguishing systems shall be connected to the building fire alarm system where a fire alarm system is required by another section of this code or is otherwise installed. **[F]**

907.14 Monitoring. Fire alarm systems required by this chapter or the *Fire Code of New York State* shall be monitored by an approved supervising station in accordance with NFPA 72. **[F]**

Exception: Supervisory service is not required for:

1. Single- and multiple-station smoke alarms required by Section 907.2.10.
2. Smoke detectors in Group I-3 occupancies.
3. Automatic sprinkler systems in one- and two-family dwellings.

907.15 Automatic telephone-dialing devices. Automatic telephone-dialing devices used to transmit an emergency alarm shall not be connected to any fire department telephone number unless approved by the fire chief. **[F]**

PASSERO ASSOCIATES
engineering architecture

		907.16 Acceptance tests. Upon completion of the installation of the fire alarm system, alarm notification appliances and circuits, alarm-initiating devices and circuits, supervisory-signal initiating devices and circuits, signaling line circuits, and primary and secondary power supplies shall be tested in accordance with NFPA 72. **[F]** **907.17 Record of completion.** A record of completion in accordance with NFPA 72 verifying that the system has been installed in accordance with the approved plans and specifications shall be provided. **[F]** **907.18 Instructions.** Operating, testing and maintenance instructions, and record drawings ("as builts") and equipment specifications shall be provided at an approved location. **[F]** **907.19 Inspection, testing and maintenance.** The maintenance and testing schedules and procedures for fire alarm and fire detection systems shall be in accordance with the *Fire Code of New York State.* **[F]**
24	912	**SECTION 912 FIRE DEPARTMENT CONNECTIONS** **912.1 Installation.** Fire department connections shall be installed in accordance with the NFPA standard applicable to the system design and shall comply with Sections 912.2 through 912.5. **[F]** **912.2 Location.** With respect to hydrants, driveways, buildings and landscaping, fire department connections shall be so located that fire apparatus and hose connected to supply the system will not obstruct access to the buildings for other fire apparatus. The location of fire department connections shall be approved. **[F]** **912.2.1 Visible location.** Fire department connections shall be located on the street side of buildings, fully visible and recognizable from the street or nearest point of fire department vehicle access or as otherwise approved by the code enforcement official. **[F]** **912.2.2 Existing buildings.** On existing buildings, wherever the fire department connection is not visible to approaching fire apparatus, the fire department connection shall be indicated by an approved sign mounted on the street front or on the side of the building. Such sign shall have the letters "FDC" at least 6 inches (152 mm) high and words in letters at least 2 inches (51 mm) high or an arrow to indicate the location. All such signs shall be subject to the approval of the code enforcement official. **[F]** **912.3 Access.** Immediate access to fire department connections shall be maintained at all times and without obstruction by fences, bushes, trees, walls or any other object for a minimum of 3 feet (914 mm). **[F]** **912.3.1 Locking fire department connection caps.** The code enforcement official is authorized to require locking caps on fire department connections for water-based fire protection systems where the responding fire department carries appropriate key wrenches for removal. **[F]** **912.4 Signs.** A metal sign with raised letters at least 1 inch (25 mm) in size shall be mounted on all fire department connections serving automatic sprinklers, standpipes or fire pump connections. Such signs shall read: AUTOMATIC SPRINKLERS, STANDPIPES or TEST CONNECTION, or a combination thereof as applicable. **[F]** **912.5 Backflow protection.** The potable water supply to automatic sprinkler and standpipe systems shall be protected against backflow as required by the *Plumbing Code of New York State.* **[P]**
25	1001.1 &2	**1001.1 General.** Buildings or portions thereof shall be provided with a means of egress system as required by this chapter. The provisions of this chapter shall control the design, construction and arrangement of means of egress components required to provide an approved means of egress from structures and portions thereof.

PASSERO ASSOCIATES
engineering architecture

		1001.2 Minimum requirements. It shall be unlawful to alter a building or structure in a manner that will reduce the number of exits or the capacity of the means of egress to less than required by this code.
26	1004 & Table 1004.1.1	**SECTION 1004 OCCUPANT LOAD** **1004.1 Design occupant load.** In determining means of egress requirements, the number of occupants for whom means of egress facilities shall be provided shall be determined in accordance with this section. Where occupants from accessory areas egress through a primary space, the calculated occupant load for the primary space shall include the total occupant load of the primary space plus the number of occupants egressing through it from the accessory area. **1004.1.1 Areas without fixed seating.** The number of occupants shall be computed at the rate of one occupant per unit of area as prescribed in Table 1004.1.1. For areas without fixed seating, the occupant load shall not be less than that number determined by dividing the floor area under consideration by the occupant per unit of area factor assigned to the occupancy as set forth in Table 1004.1.1. Where an intended use is not listed in Table 1004.1.1, the code enforcement official shall establish a use based on a listed use that most nearly resembles the intended use. **TABLE 1004.1.1 MAXIMUM FLOOR AREA ALLOWANCES PER OCCUPANT** **1004.2 Increased occupant load.** The occupant load permitted in any building, or portion thereof, is permitted to be increased from that number established for the occupancies in Table 1004.1.1, provided that all other requirements of the code are also met based on such modified number and the occupant load does not exceed one occupant per 7 square feet (0.65 m²) of occupiable floor space. Where required by the code enforcement official, an approved aisle, seating or fixed equipment diagram substantiating any increase in occupant load shall be submitted. Where required by the code enforcement official, such diagram shall be posted. **1004.3 Posting of occupant load.** Every room or space that is an assembly occupancy shall have the occupant load of the room or space posted in a conspicuous place, near the main exit or exit access doorway from the room or space. Posted signs shall be of an approved legible permanent design and shall be maintained by the owner or authorized agent.

FUNCTION OF SPACE	FLOOR AREA IN SQ. FT. PER OCCUPANT
Accessory storage areas, mechanical equipment room	300 gross
Assembly without fixed seats	
Concentrated (chairs only—not fixed)	7 net
Standing space	5 net
Unconcentrated (tables and chairs)	15 net
Business areas	100 gross
Locker rooms	50 gross
Mercantile	
Areas on other floors	60 gross
Basement and grade floor areas	30 gross
Storage, stock, shipping areas	300 gross

PASSERO ASSOCIATES
engineering architecture

28	1007.1	**1007.1 Accessible means of egress required.** Accessible means of egress shall comply with this section. Accessible spaces shall be provided with not less than one accessible means of egress. Where more than one means of egress is required by Section 1015.1 or 1019.1 from any accessible space, each accessible portion of the space shall be served by not less than two accessible means of egress. **Exceptions:** 1. One accessible means of egress is required from an accessible mezzanine level in accordance with Section 1007.3, 1007.4 or 1007.5. 2. In assembly spaces with sloped floors, one accessible means of egress is required from a space where the common path of travel of the accessible route for access to the wheelchair spaces meets the requirements in Section 1025.8.
29	1008	**SECTION 1008 DOORS, GATES AND TURNSTILES** **1008.1 Doors.** Means of egress doors shall meet the requirements of this section. Doors serving a means of egress system shall meet the requirements of this section and Section 1018.2. Doors provided for egress purposes in numbers greater than required by this code shall meet the requirements of this section. Means of egress doors shall be readily distinguishable from the adjacent construction and finishes such that the doors are easily recognizable as doors. Mirrors or similar reflecting materials shall not be used on means of egress doors. Means of egress doors shall not be concealed by curtains, drapes, decorations or similar materials. **1008.1.1 Size of doors.** The minimum width of each door opening shall be sufficient for the occupant load thereof and shall provide a clear width of not less than 32 inches (813 mm). Clear openings of doorways with swinging doors shall be measured between the face of the door and the stop, with the door open 90 degrees (1.57 rad). Where this section requires a minimum clear width of 32 inches (813 mm) and a door opening includes two door leaves without a mullion, one leaf shall provide a clear opening width of 32 inches (813 mm). The maximum width of a swinging door leaf shall be 48 inches (1219 mm) nominal. Means of egress doors in a Group I-2 occupancy used for the movement of beds shall provide a clear width not less than 41.5 inches (1054 mm). The height of doors shall not be less than 80 inches (2032 mm). **Exceptions:** 3. Door openings to storage closets less than 10 square feet (0.93 m²) in area shall not be limited by the minimum width. 8. Door openings required to be accessible within Type B units shall have a minimum clear width of 32 inches (813 mm). **1008.1.1.1 Projections into clear width.** There shall not be projections into the required clear width lower than 34 inches (864 mm) above the floor or ground. Projections into the clear opening width between 34 inches (864 mm) and 80 inches (2032 mm) above the floor or ground shall not exceed 4 inches (102 mm). **1008.1.2 Door swing.** Egress doors shall be side-hinged swinging. **Exceptions:** 1. Private garages, office areas, factory and storage areas with an occupant load of 10 or less. 6. In other than Group H occupancies, horizontal sliding doors complying with Section 1008.1.3.3 are permitted in a means of egress. 7. Power-operated doors in accordance with Section 1008.1.3.2. Doors shall swing in the direction of egress travel where serving an occupant load of 50 or more persons or a Group H occupancy.

		The opening force for interior side-swinging doors without closers shall not exceed a 5-pound (22 N) force. For other side-swinging, sliding and folding doors, the door latch shall release when subjected to a 15-pound (67 N) force. The door shall be set in motion when subjected to a 30-pound (133 N) force. The door shall swing to a full-open position when subjected to a 15-pound (67 N) force. Forces shall be applied to the latch side. **1008.1.3 Special doors.** Special doors and security grilles shall comply with the requirements of Sections 1008.1.3.1 through 1008.1.3.5. **1008.1.3.2 Power-operated doors.** Where means of egress doors are operated by power, such as doors with a photoelectric-actuated mechanism to open the door upon the approach of a person, or doors with power-assisted manual operation, the design shall be such that in the event of power failure, the door is capable of being opened manually to permit means of egress travel or closed where necessary to safeguard means of egress. The forces required to open these doors manually shall not exceed those specified in Section 1008.1.2, except that the force to set the door in motion shall not exceed 50 pounds (220 N). The door shall be capable of swinging from any position to the full width of the opening in which such door is installed when a force is applied to the door on the side from which egress is made. Full-power-operated doors shall comply with BHMA A156.10. Power-assisted and low-energy doors shall comply with BHMA A156.19. **Exceptions:** 2. Horizontal sliding doors complying with Section 1008.1.3.3. 3. For a biparting door in the emergency breakout mode, a door leaf located within a multiple-leaf opening shall be exempt from the minimum 32-inch (813 mm) single-leaf requirement of Section 1008.1.1, provided a minimum 32-inch (813 mm) clear opening is provided when the two biparting leaves meeting in the center are broken out. **1008.1.3.4 Access-controlled egress doors.** The entrance doors in a means of egress in buildings with an occupancy in Group A, B, E, M, R-1 or R-2 and entrance doors to tenant spaces in occupancies in Groups A, B, E, M, R-1 and R-2 are permitted to be equipped with an approved entrance and egress access control system which shall be installed in accordance with all of the following criteria: 1. A sensor shall be provided on the egress side arranged to detect an occupant approaching the doors. The doors shall be arranged to unlock by a signal from or loss of power to the sensor. 2. Loss of power to that part of the access control system which locks the doors shall automatically unlock the doors. 3. The doors shall be arranged to unlock from a manual unlocking device located 40 inches to 48 inches (1016 mm to 1219 mm) vertically above the floor and within 5 feet (1524 mm) of the secured doors. Ready access shall be provided to the manual unlocking device and the device shall be clearly identified by a sign that reads "PUSH TO EXIT." When operated, the manual unlocking device shall result in direct interruption of power to the lock independent of the access control system electronics and the doors shall remain unlocked for a minimum of 30 seconds. 4. Activation of the building fire alarm system, if provided, shall automatically unlock the doors, and the doors shall remain unlocked until the fire alarm system has been reset. 5. Activation of the building automatic sprinkler or fire detection system, if provided, shall automatically unlock the doors. The doors shall remain unlocked until the fire alarm system has been reset. 6. Entrance doors in buildings with an occupancy in Group A, B, E or M shall not be secured from the egress side during periods that the building is open to the general public. **1008.1.3.5 Security grilles.** In Groups B, F, M and S, horizontal sliding or vertical security grilles are permitted at the main exit and shall be openable from the inside without the use of a key or special knowledge or effort during periods that the space is occupied. The grilles shall remain secured in the full-open position during the period of occupancy by the general public. Where two or more means of egress are required, not more than one-half of the exits or exit access doorways shall be equipped with horizontal sliding or vertical security grilles. **1008.1.4 Floor elevation.** There shall be a floor or landing on each side of a door. Such floor or landing shall be at the same elevation on each side of the door. Landings shall be level except for exterior landings, which are permitted to have a slope not to exceed 0.25 unit vertical in 12 units horizontal (2-percent slope).

PASSERO ASSOCIATES
engineering architecture

Exceptions:
2. Exterior doors as provided for in Section 1003.5, Exception 1, and Section 1018.2, which are not on an accessible route.
4. Variations in elevation due to differences in finish materials, but not more than 0.5 inch (12.7 mm).

1008.1.5 Landings at doors. Landings shall have a width not less than the width of the stairway or the door, whichever is greater. Doors in the fully open position shall not reduce a required dimension by more than 7 inches (178 mm). When a landing serves an occupant load of 50 or more, doors in any position shall not reduce the landing to less than one-half its required width. Landings shall have a length measured in the direction of travel of not less than 44 inches (1118 mm).

1008.1.6 Thresholds. Thresholds at doorways shall not exceed 0.75 inch (19.1 mm) in height for sliding doors serving dwelling units or 0.5 inch (12.7 mm) for other doors. Raised thresholds and floor level changes greater than 0.25 inch (6.4 mm) at doorways shall be beveled with a slope not greater than one unit vertical in two units horizontal (50-percent slope).

1008.1.7 Door arrangement. Space between two doors in a series shall be 48 inches (1219 mm) minimum plus the width of a door swinging into the space. Doors in a series shall swing either in the same direction or away from the space between the doors.

1008.1.8 Door operations. Except as specifically permitted by this section egress doors shall be readily openable from the egress side without the use of a key or special knowledge or effort.
1008.1.8.1 Hardware. Door handles, pulls, latches, locks and other operating devices on doors required to be accessible by Chapter 11 shall not require tight grasping, tight pinching or twisting of the wrist to operate.
1008.1.8.2 Hardware height. Door handles, pulls, latches, locks and other operating devices shall be installed 34 inches (864 mm) minimum and 48 inches (1219 mm) maximum above the finished floor. Locks used only for security purposes and not used for normal operation are permitted at any height.

Exception: Access doors or gates in barrier walls and fences protecting pools, spas and hot tubs shall be permitted to have operable parts of the release of latch on self-latching devices at 54 inches (1370 mm) maximum above the finished floor or ground, provided the self-latching devices are not also self-locking devices operated by means of a key, electronic opener or integral combination lock.
1008.1.8.3 Locks and latches. Locks and latches shall be permitted to prevent operation of doors where any of the following exists:
1. Places of detention or restraint.
2. In buildings in occupancy Group A having an occupant load of 300 or less, Groups B, F, M and S, and in places of religious worship, the main exterior door or doors are permitted to be equipped with key-operated locking devices from the egress side provided:
2.1. The locking device is readily distinguishable as locked,
2.2. A readily visible durable sign is posted on the egress side on or adjacent to the door stating: THIS DOOR TO REMAIN UNLOCKED WHEN BUILDING IS OCCUPIED. The sign shall be in letters 1 inch (25 mm) high on a contrasting background,
2.3. The use of the key-operated locking device is revokable by the code enforcement official for due cause.
3. Where egress doors are used in pairs, approved automatic flush bolts shall be permitted to be used, provided that the door leaf having the automatic flush bolts has no doorknob or surface-mounted hardware.
4. Doors from individual dwelling or sleeping units of Group R occupancies having an occupant load of 10 or less are permitted to be equipped with a night latch, dead bolt or security chain, provided such devices are openable from the inside without the use of a key or tool.
1008.1.8.4 Bolt locks. Manually operated flush bolts or surface bolts are not permitted.

Exceptions:

		1. On doors not required for egress in individual dwelling units or sleeping units. 2. Where a pair of doors serves a storage or equipment room, manually operated edge- or surface-mounted bolts are permitted on the inactive leaf. **1008.1.8.5 Unlatching.** The unlatching of any door or leaf shall not require more than one operation. **Exceptions:** 1. Places of detention or restraint. 2. Where manually operated bolt locks are permitted by Section 1008.1.8.4. 3. Doors with automatic flush bolts as permitted by Section 1008.1.8.3, Exception 3. 4. Doors from individual dwelling units and sleeping units of Group R occupancies as permitted by Section 1008.1.8.3, Exception 4. **1008.1.8.6 Delayed egress locks.** Approved, listed, delayed egress locks shall be permitted to be installed on doors serving any occupancy except Group A, E and H occupancies in buildings that are equipped throughout with an automatic sprinkler system in accordance with Section 903.3.1.1 or an approved automatic smoke or heat detection system installed in accordance with Section 907, provided that the doors unlock in accordance with Items 1 through 6 below. A building occupant shall not be required to pass through more than one door equipped with a delayed egress lock before entering an exit. 1. The doors unlock upon actuation of the automatic sprinkler system or automatic fire detection system. 2. The doors unlock upon loss of power controlling the lock or lock mechanism. 3. The door locks shall have the capability of being unlocked by a signal from the fire command center. 4. The initiation of an irreversible process which will release the latch in not more than 15 seconds when a force of not more than 15 pounds (67 N) is applied for 1 second to the release device. Initiation of the irreversible process shall activate an audible signal in the vicinity of the door. Once the door lock has been released by the application of force to the releasing device, relocking shall be by manual means only. **Exception:** Where approved, a delay of not more than 30 seconds is permitted. 5. A sign shall be provided on the door located above and within 12 inches (305 mm) of the release device reading: PUSH UNTIL ALARM SOUNDS. DOOR CAN BE OPENED IN 15 [30] SECONDS. 6. Emergency lighting shall be provided at the door. **1008.1.8.7 Stairway doors.** Interior stairway means of egress doors shall be openable from both sides without the use of a key or special knowledge or effort. **Exceptions:** 1. Stairway discharge doors shall be openable from the egress side and shall only be locked from the opposite side. 2. This section shall not apply to doors arranged in accordance with Section 403.12. 3. In stairways serving not more than four stories, doors are permitted to be locked from the side opposite the egress side, provided they are openable from the egress side and capable of being unlocked simultaneously without unlatching upon a signal from the fire command center, if present, or a signal by emergency personnel from a single location inside the main entrance to the building. **1008.1.9 Panic and fire exit hardware.** Where panic and fire exit hardware is installed, it shall comply with the following: 1. The actuating portion of the releasing device shall extend at least one-half of the door leaf width. 2. The maximum unlatching force shall not exceed 15 pounds (67 N). Electrical rooms with equipment rated 1,200 amperes or more and over 6 feet (1829 mm) wide that contain overcurrent devices, switching devices or control devices with exit access doors must be equipped with panic hardware and doors must swing in the direction of egress.

PASSERO ASSOCIATES
engineering architecture

		If balanced doors are used and panic hardware is required, the panic hardware shall be the push-pad type and the pad shall not extend more then one-half the width of the door measured from the latch side.
33	1015	**SECTION 1015 EXIT AND EXIT ACCESS DOORWAYS** **1015.1 Exit or exit access doorways required.** Two exits or exit access doorways from any space shall be provided where one of the following conditions exists: 1. The occupant load of the space exceeds the values in Table 1015.1. 2. The common path of egress travel exceeds the limitations of Section 1014.3. 3. Where required by Sections 1015.3, 1015.4 and 1015.5. **TABLE 1015.1 SPACES WITH ONE MEANS OF EGRESS** OCCUPANCY | MAXIMUM OCCUPANT LOAD A, B,E[a], F, M, U | 49 **1015.1.1 Three or more exits.** Access to three or more exits shall be provided from a floor area where required by Section 1019.1. **1015.2 Exit or exit access doorway arrangement.** Required exits shall be located in a manner that makes their availability obvious. Exits shall be unobstructed at all times. Exit and exit access doorways shall be arranged in accordance with Sections 1015.2.1 and 1015.2.2. **1015.2.1 Two exits or exit access doorways.** Where two exits or exit access doorways are required from any portion of the exit access, the exit doors or exit access doorways shall be placed a distance apart equal to not less than one-half of the length of the maximum overall diagonal dimension of the building or area to be served measured in a straight line between exit doors or exit access doorways. Interlocking or scissor stairs shall be counted as one exit stairway. **Exceptions:** 1. Where exit enclosures are provided as a portion of the required exit and are interconnected by a 1-hour fire-resistance-rated corridor conforming to the requirements of Section 1017, the required exit separation shall be measured along the shortest direct line of travel within the corridor. 2. Where a building is equipped throughout with an automatic sprinkler system in accordance with Section 903.3.1.1 or 903.3.1.2, the separation distance of the exit doors or exit access doorways shall not be less than one-third of the length of the maximum overall diagonal dimension of the area served. **1015.2.2 Three or more exits or exit access doorways.** Where access to three or more exits is required, at least two exit doors or exit access doorways shall be arranged in accordance with the provisions of Section 1015.2.1.
34	1017.1	**1017.1 Construction.** Corridors shall be fire-resistance rated in accordance with Table 1017.1. The corridor walls required to be fire-resistance rated shall comply with Section 708 for fire partitions. **TABLE 1017.1 CORRIDOR FIRE-RESISTANCE RATING**

PASSERO ASSOCIATES
engineering architecture

		<table><tr><th>OCCUPANCY</th><th>OCCUPANT LOAD SERVED BY CORRIDOR</th><th>REQUIRED FIRE-RESISTANCE RATING (hours) Without sprinkler system</th></tr><tr><td>A, B, E, F, M, S, U</td><td>Greater than 30</td><td>1</td></tr></table>
39	1021	**SECTION 1021 EXIT PASSAGEWAYS** **1021.1 Exit passageway.** Exit passageways serving as an exit component in a means of egress system shall comply with the requirements of this section. An exit passageway shall not be used for any purpose other than as a means of egress. **1021.2 Width.** The width of exit passageways shall be determined as specified in Section 1005.1 but such width shall not be less than 44 inches (1118 mm), except that exit passageways serving an occupant load of less than 50 shall not be less than 36 inches (914 mm) in width. The required width of exit passageways shall be unobstructed. **Exception:** Doors, when fully opened, and handrails, shall not reduce the required width by more than 7 inches (178 mm). Doors in any position shall not reduce the required width by more than one-half. Other nonstructural projections such as trim and similar decorative features are permitted to project into the required width 1.5 inches (38 mm) on each side. **1021.3 Construction.** Exit passageway enclosures shall have walls, floors and ceilings of not less than 1-hour fire-resistance rating, and not less than that required for any connecting exit enclosure. Exit passageways shall be constructed as fire barriers in accordance with Section 706. **1021.4 Openings and penetrations.** Exit passageway opening protectives shall be in accordance with the requirements of Section 715. Except as permitted in Section 402.4.6, openings in exit passageways other than unexposed exterior openings shall be limited to those necessary for exit access to the exit passageway from normally occupied spaces and for egress from the exit passageway. Where interior exit enclosures are extended to the exterior of a building by an exit passageway, the door assembly from the exit enclosure to the exit passageway shall be protected by a fire door conforming to the requirements in Section 715.4. Fire door assemblies in exit passageways shall comply with Section 715.4.4. Elevators shall not open into an exit passageway. **1021.5 Penetrations.** Penetrations into and openings through an exit passageway are prohibited except for required exit doors, equipment and ductwork necessary for independent pressurization, sprinkler piping, standpipes, electrical raceway for fire department communication and electrical raceway serving the exit passageway and terminating at a steel box not exceeding 16 square inches (0.010 m^2). Such penetrations shall be protected in accordance with Section 712. There shall be no penetrations or communicating openings, whether protected or not, between adjacent exit passageways.
43	1101.1-1110 & ICC/A117.1(03)	**SECTION 1101 GENERAL** **1101.1 Scope.** The provisions of this chapter shall control the design and construction of facilities for accessibility to physically disabled persons. **1101.2 Design.** Buildings and facilities shall be designed and constructed to be accessible in accordance with this code and ICC/ANSI A117.1.

PASSERO ASSOCIATES
engineering architecture

		SECTION 1103 SCOPING REQUIREMENTS **1103.1 Where required.** Sites, buildings, structures, facilities, elements and spaces, temporary or permanent, shall be accessible to persons with physical disabilities. **1103.2 General exceptions.** Sites, buildings, structures, facilities, elements and spaces shall be exempt from this chapter to the extent specified in this section. **1103.2.1 Specific requirements.** Accessibility is not required in buildings and facilities, or portions thereof, to the extent permitted by Sections 1104 through 1110. **1103.2.2 Existing buildings.** Existing buildings shall comply with the *Existing Building Code of New York State.* **1103.2.3 Employee work areas.** Spaces and elements within employee work areas shall only be required to comply with Sections 907.9.1.2, 1007 and 1104.3.1 and shall be designed and constructed so that individuals with disabilities can approach, enter and exit the work area. Work areas, or portions of work areas, that are less than 150 square feet (14 m²) in area and elevated 7 inches (178 mm) or more above the ground or finish floor where the elevation is essential to the function of the space shall be exempt from all requirements. **1103.2.6 Construction sites.** Structures, sites and equipment directly associated with the actual processes of construction including, but not limited to, scaffolding, bridging, materials hoists, materials storage or construction trailers are not required to be accessible. **1103.2.7 Raised areas.** Raised areas used primarily for purposes of security, life safety or fire safety including, but not limited to, observation galleries, prison guard towers, fire towers or lifeguard stands are not required to be accessible or to be served by an accessible route. **1103.2.8 Limited access spaces.** Nonoccupiable spaces accessed only by ladders, catwalks, crawl spaces, freight elevators or very narrow passageways are not required to be accessible. **1103.2.9 Equipment spaces.** Spaces frequented only by personnel for maintenance, repair or monitoring of equipment are not required to be accessible. Such spaces include, but are not limited to, elevator pits, elevator penthouses, mechanical, electrical or communications equipment rooms, piping or equipment catwalks, water or sewage treatment pump rooms and stations, electric substations and transformer vaults, and highway and tunnel utility facilities. **SECTION 1104 ACCESSIBLE ROUTE** **1104.1 Site arrival points.** Accessible routes within the site shall be provided from public transportation stops; accessible parking; accessible passenger loading zones; and public streets or sidewalks to the accessible building entrance served. **Exception:** Other than in buildings or facilities containing or serving Type B units, an accessible route shall not be required between site arrival points and the building or facility entrance if the only means of access between them is a vehicular way not providing for pedestrian access. **1104.2 Within a site.** At least one accessible route shall connect accessible buildings, accessible facilities, accessible elements and accessible spaces that are on the same site. **Exception:** An accessible route is not required between accessible buildings, accessible facilities, accessible elements and accessible spaces that have, as the only means of access between them, a vehicular way not providing for pedestrian access. **1104.3 Connected spaces.** When a building or portion of a building is required to be accessible, an accessible route shall be provided to each portion of the building, to accessible building entrances connecting accessible pedestrian walkways and the public way.

Exception: In assembly areas with fixed seating required to be accessible, an accessible route shall not be required to serve fixed seating where wheelchair spaces or designated aisle seats required to be on an accessible route are not provided.

1104.3.1 Employee work areas. Common use circulation paths within employee work areas shall be accessible routes.

Exceptions:
1. Common use circulation paths, located within employee work areas that are less than 300 square feet (27.9 m^2) in size and defined by permanently installed partitions, counters, casework or furnishings, shall not be required to be accessible routes.
2. Common use circulation paths, located within employee work areas, that are an integral component of equipment, shall not be required to be accessible routes.
3. Common use circulation paths, located within exterior employee work areas that are fully exposed to the weather, shall not be required to be accessible routes.

1104.5 Location. Accessible routes shall coincide with or be located in the same area as a general circulation path. Where the circulation path is interior, the accessible route shall also be interior. Where only one accessible route is provided, the accessible route shall not pass through kitchens, storage rooms, restrooms, closets or similar spaces.

1104.6 Security barriers. Security barriers including, but not limited to, security bollards and security check points shall not obstruct a required accessible route or accessible means of egress.

Exception: Where security barriers incorporate elements that cannot comply with these requirements, such as certain metal detectors, fluoroscopes or other similar devices, the accessible route shall be permitted to be provided adjacent to security screening devices. The accessible route shall permit persons with disabilities passing around security barriers to maintain visual contact with their personal items to the same extent provided others passing through the security barrier.

SECTION 1105 ACCESSIBLE ENTRANCES

1105.1 Public entrances. In addition to accessible entrances required by Sections 1105.1.1 through 1105.1.6, at least 60 percent of all public entrances shall be accessible.

Exceptions:

1. An accessible entrance is not required to areas not required to be accessible.
2. Loading and service entrances that are not the only entrance to a tenant space.

1105.1.3 Restricted entrances. Where restricted entrances are provided to a building or facility, at least one restricted entrance to the building or facility shall be accessible.

1105.1.5 Service entrances. If a service entrance is the only entrance to a building or a tenant space in a facility, that entrance shall be accessible.

SECTION 1106 PARKING AND PASSENGER LOADING FACILITIES

PASSERO ASSOCIATES
engineering architecture

1106.1 Required. Where parking is provided, accessible parking spaces shall be provided in compliance with Table 1106.1, except as required by Sections 1106.2 through 1106.4. Where more than one parking facility is provided on a site, the number of parking spaces required to be accessible shall be calculated separately for each parking facility.

Exception: This section does not apply to parking spaces used exclusively for buses, trucks, other delivery vehicles, law enforcement vehicles or vehicular impound and motor pools where lots accessed by the public are provided with an accessible passenger loading zone.

TABLE 1106.1 ACCESSIBLE PARKING SPACES

TOTAL PARKING SPACES PROVIDED	REQUIRED MINIMUM NUMBER OF ACCESSIBLE SPACES
1 to 25	1
26 to 50	2
51 to 75	3
76 to 100	4
101 to 150	5
151 to 200	6
201 to 300	7
301 to 400	8
401 to 500	9
501 to 1,000	2% of total
1,001 and over	20, plus one for each 100, or fraction thereof, over 1,000

1106.1.1 Access aisles. Accessible parking spaces shall be in conformance with ICC/ANSI A117.1 except that spaces shall be provided with access aisles at least 8 feet (2440 mm) in width.

1106.3 Hospital outpatient facilities. Ten percent of patient and visitor parking spaces provided to serve hospital outpatient facilities shall be accessible.

1106.4 Rehabilitation facilities and outpatient physical therapy facilities. Twenty percent, but not less than one, of the portion of patient and visitor parking spaces serving rehabilitation facilities and outpatient physical therapy facilities shall be accessible.

1106.5 Signage. Each accessible parking space shall be provided with signage displaying the international symbol of accessibility. Each access aisle shall be provided with signage reading "NO PARKING ANYTIME". Signs shall be permanently installed at a clear height of between 60 inches (1525 mm) and 84 inches (2185 mm) above grade and shall not interfere with an accessible route from an access aisle.

1106.6 Location. Accessible parking spaces shall be located on the shortest accessible route of travel from adjacent parking to an accessible building entrance. In parking facilities that do not serve a particular building, accessible parking spaces shall be located on the shortest route to an accessible pedestrian entrance to the parking facility. Where buildings have multiple accessible entrances with adjacent parking, accessible parking spaces shall be dispersed and located near the accessible entrances.

Exceptions:

2. Accessible parking spaces shall be permitted to be located in different parking facilities if substantially equivalent or greater accessibility is provided in terms of distance from an accessible entrance or entrances, parking fee and user convenience.

1106.7 Passenger loading zones. Passenger loading zones shall be designed and constructed in accordance with ICC/ANSI A117.1.

1106.7.1 Continuous loading zones. Where passenger loading zones are provided, one passenger loading zone in every continuous 100 linear feet (30.4 m) maximum of loading zone space shall be accessible.
1106.7.2 Medical facilities. A passenger loading zone shall be provided at an accessible entrance to licensed medical and long-term care facilities where people receive physical or medical treatment or care and where the period of stay exceeds 24 hours.
1106.7.3 Valet parking. A passenger loading zone shall be provided at valet parking services.

SECTION 1109 OTHER FEATURES AND FACILITIES

1109.1 General. Accessible building features and facilities shall be provided in accordance with Sections 1109.2 through 1109.14.

1109.2 Toilet and bathing facilities. Toilet rooms and bathing facilities shall be accessible. Where a floor level is not required to be connected by an accessible route, the only toilet rooms or bathing facilities provided within the facility shall not be located on the inaccessible floor. At least one of each type of fixture, element, control or dispenser in each accessible toilet room and bathing facility shall be accessible.

Exceptions:

1. In toilet rooms or bathing facilities accessed only through a private office, not for common or public use and intended for use by a single occupant, any of the following alternatives are allowed:
1.1. Doors are permitted to swing into the clear floor space, provided the door swing can be reversed to meet the requirements in ICC/ANSI A117.1;
1.2 The height requirements for the water closet in ICC/ANSI A117.1 are not applicable;
1.3. Grab bars are not required to be installed in a toilet room, provided that reinforcement has been installed in the walls and located so as to permit the installation of such grab bars; and
1.4. The requirement for height, knee and toe clearance shall not apply to a lavatory.
2. This section is not applicable to toilet and bathing facilities that serve dwelling units or sleeping units that are not required to be accessible by Section 1107.
3. Where multiple single-user toilet rooms or bathing facilities are clustered at a single location, at least 50 percent but not less than one room for each use at each cluster shall be accessible.
4. Where no more than one urinal is provided in a toilet room or bathing facility, the urinal is not required to be accessible.
5. Toilet rooms that are part of critical care or intensive care patient sleeping rooms are not required to be accessible.
1109.2.1 Unisex toilet and bathing rooms. In assembly and mercantile occupancies, an accessible unisex toilet room shall be provided where an aggregate of six or more male and female water closets is required. In buildings of mixed occupancy, only those water closets required for the assembly or mercantile occupancy shall be used to determine the unisex toilet room requirement. In recreational facilities where separate-sex bathing rooms are provided, an accessible unisex bathing room shall be provided. Fixtures located within unisex toilet and bathing rooms shall be included in determining the number of fixtures provided in an occupancy.

Exception: Where each separate-sex bathing room has only one shower or bathtub fixture, a unisex bathing room is not required.

1109.2.1.1 Standard. Unisex toilet and bathing rooms shall comply with Sections 1109.2.1.2 through 1109.2.1.7 and ICC/ANSI A117.1.
1109.2.1.2 Unisex toilet rooms. Unisex toilet rooms shall include only one water closet and only one lavatory. A unisex bathing room in accordance with Section 1109.2.1.3 shall be considered a unisex toilet room.

Exception: A urinal is permitted to be provided in addition to the water closet in a unisex toilet room.
1109.2.1.3 Unisex bathing rooms. Unisex bathing rooms shall include only one shower or bathtub fixture. Unisex bathing rooms shall also include one water closet and one lavatory. Where storage facilities are provided for separate-sex bathing rooms, accessible storage facilities shall be provided for unisex bathing rooms.
1109.2.1.4 Location. Unisex toilet and bathing rooms shall be located on an accessible route. Unisex toilet rooms shall be located not more than one story above or below separate-sex toilet rooms. The accessible route from any separate-sex toilet room to a unisex toilet room shall not exceed 500 feet (152 m).
1109.2.1.6 Clear floor space. Where doors swing into a unisex toilet or bathing room, a clear floor space not less than 30 inches by 48 inches (762 mm by 1219 mm) shall be provided, within the room, beyond the area of the door swing.
1109.2.1.7 Privacy. Doors to unisex toilet and bathing rooms shall be securable from within the room.
1109.2.2 Water closet compartment. Where water closet compartments are provided in a toilet room or bathing facility, at least one wheelchair-accessible compartment shall be provided. Where the combined total water closet compartments and urinals provided in a toilet room or bathing facility is six or more, at least one ambulatory-accessible water closet compartment shall be provided in addition to the wheelchair-accessible compartment. Wheelchair-accessible and ambulatory-accessible compartments shall comply with ICC/ANSI A117.1.

1109.3 Sinks. Where sinks are provided, at least 5 percent but not less than one provided in accessible spaces shall comply with ICC/ANSI A117.1.

Exception: Mop or service sinks are not required to be accessible.

1109.4 Kitchens and kitchenettes. Where kitchens and kitchenettes are provided in accessible spaces or rooms, they shall be accessible in accordance with ICC/ANSI A117.1.

1109.5 Drinking fountains. Where drinking fountains are provided on an exterior site, on a floor or within a secured area, the drinking fountains shall be provided in accordance with Sections 1109.5.1 and 1109.5.2.

1109.5.1 Minimum number. No fewer than two drinking fountains shall be provided. One drinking fountain shall comply with the requirements for people who use a wheelchair and one drinking fountain shall comply with the requirements for standing persons.

Exception: A single drinking fountain that complies with the requirements for people who use a wheelchair and standing persons shall be permitted to be substituted for two separate drinking fountains.
1109.5.2 More than the minimum number. Where more than the minimum number of drinking fountains specified in Section 1109.5.1 are provided, 50 percent of the total number of drinking fountains provided shall comply with the requirements for persons who use a wheelchair and 50 percent of the total number of drinking fountains provided shall comply with the requirements for standing persons.

Exception: Where 50 percent of the drinking fountains yields a fraction, 50 percent shall be permitted to be rounded up or down, provided that the total number of drinking fountains complying with this section equals 100 percent of the drinking fountains.

1109.8 Storage. Where fixed or built-in storage elements such as cabinets, shelves, medicine cabinets, closets and drawers are provided in required

accessible spaces, at least one of each type shall contain storage space complying with ICC/ANSI A117.1.

1109.8.1 Lockers. Where lockers are provided in accessible spaces, at least five percent, but not less than one, of each type shall be accessible.
1109.8.2 Shelving and display units. Self-service shelves and display units shall be located on an accessible route. Such shelving and display units shall not be required to comply with reach-range provisions.
1109.8.3 Coat hooks and shelves. Where coat hooks and shelves are provided in toilet rooms or toilet compartments or in dressing, fitting or locker rooms, at least one of each type shall be accessible and shall be provided in accessible toilet rooms without toilet compartments, accessible toilet compartments and accessible dressing, fitting and locker rooms.

1109.11 Seating at tables, counters and work surfaces. Where seating or standing space at fixed or built-in tables, counters or work surfaces is provided in accessible spaces, at least 5 percent of the seating and standing spaces, but not less than one, shall be accessible. In Group I-3 occupancy visiting areas at least 5 percent, but not less than one, cubicle or counter shall be accessible on both the visitor and detainee sides.

Exceptions:

1. Check-writing surfaces at check-out aisles not required to comply with Section 1109.12.2 are not required to be accessible.
1109.11.1 Dispersion. Accessible fixed or built-in seating at tables, counters or work surfaces shall be distributed throughout the space or facility containing such elements.

1109.12 Service facilities. Service facilities shall provide for accessible features in accordance with Sections 1109.12.1 through 1109.12.5.

1109.12.1 Dressing, fitting and locker rooms. Where dressing rooms, fitting rooms or locker rooms are provided, at least 5 percent, but not less than one, of each type of use in each cluster provided shall be accessible.
1109.12.2 Check-out aisles. Where check-out aisles are provided, accessible check-out aisles shall be provided in accordance with Table 1109.12.2. Where check-out aisles serve different functions, at least one accessible check-out aisle shall be provided for each function. Where checkout aisles serve different functions, accessible check-out aisles shall be provided in accordance with Table 1109.12.2 for each function. Where check-out aisles are dispersed throughout the building or facility, accessible check-out aisles shall also be dispersed. Traffic control devices, security devices and turnstiles located in accessible check-out aisles or lanes shall be accessible.

TABLE 1109.12.2 ACCESSIBLE CHECK-OUT AISLES

TOTAL CHECK-OUT AISLES OF EACH FUNCTION	MINIMUM NUMBER OF ACCESSIBLE CHECK-OUT AISLES OF EACH FUNCTION
1 to 4	1
5 to 8	2
9 to 15	3
Over 15	3, plus 20% of additional aisles

1109.12.3 Point of sale and service counters. Where counters are provided for sales or distribution of goods or services, at least one of each type provided shall be accessible. Where such counters are dispersed throughout the building or facility, accessible counters shall also be dispersed.
1109.12.5 Queue and waiting lines. Queue and waiting lines servicing accessible counters or check-out aisles shall be accessible.

1109.13 Controls, operating mechanisms and hardware. Controls, operating mechanisms and hardware intended for operation by the occupant, including switches that control lighting and ventilation and electrical convenience outlets, in accessible spaces, along accessible routes or as parts of accessible elements shall be accessible.

Exceptions:

1. Operable parts that are intended for use only by service or maintenance personnel shall not be required to be accessible.
2. Electrical or communication receptacles serving a dedicated use shall not be required to be accessible.
3. Where two or more outlets are provided in a kitchen above a length of counter top that is uninterrupted by a sink or appliance, one outlet shall not be required to be accessible.
4. Floor electrical receptacles shall not be required to be accessible.
5. HVAC diffusers shall not be required to be accessible.
6. Except for light switches, where redundant controls are provided for a single element, one control in each space shall not be required to be accessible.
7. Access doors or gates in barrier walls and fences protecting pools, spas and hot tubs shall be permitted to have operable parts of the release of latch on self-latching devices at 54 inches (1370 mm) maximum and 48 inches minimum above the finished floor or ground, provided the self-latching devices are not also self-locking devices, operated by means of a key, electronic opener, or integral combination lock.

1109.13.1 Operable window. Where operable windows are provided in rooms that are required to be accessible in accordance with Sections 1107.5.1.1, 1107.5.2.1, 1107.5.3.1, 1107.5.4, 1107.6.1.1, 1107.6.2.2.1 and 1107.6.4.1, at least one window in each room shall be accessible and each required operable window shall be accessible.

Exception: Accessible windows are not required in bathrooms or kitchens.

SECTION 1110 SIGNAGE

1110.1 Signs. Required accessible elements shall be identified by the International Symbol of Accessibility at the following locations:

1. Accessible parking spaces required by Section 1106.1 except where the total number of parking spaces provided is four or less.
2. Accessible passenger loading zones.
3. Accessible areas of refuge required by Section 1007.6.
4. Accessible rooms where multiple single-user toilet or bathing rooms are clustered at a single location.
5. Accessible entrances where not all entrances are accessible.
6. Accessible check-out aisles where not all aisles are accessible. The sign, where provided, shall be above the check-out aisle in the same location as the check-out aisle number or type of check-out identification.
7. Unisex toilet and bathing rooms.
8. Accessible dressing, fitting and locker rooms where not all such rooms are accessible.

1110.2 Directional signage. Directional signage indicating the route to the nearest like accessible element shall be provided at the following locations. These directional signs shall include the International Symbol of Accessibility:

1. Inaccessible building entrances.
2. Inaccessible public toilets and bathing facilities.
3. Elevators not serving an accessible route.

PASSERO ASSOCIATES
engineering architecture

4. At each separate-sex toilet and bathing room indicating the location of the nearest unisex toilet or bathing room where provided in accordance with Section 1109.2.1.
5. At exits and elevators serving a required accessible space, but not providing an approved accessible means of egress, signage shall be provided in accordance with Section 1007.7.

1110.3 Other signs. Signage indicating special accessibility provisions shall be provided as shown:

1. Each assembly area required to comply with Section 1108.2.6 shall provide a sign notifying patrons of the availability of assistive listening systems.

Exception: Where ticket offices or windows are provided, signs are not required at each assembly area provided that signs are displayed at each ticket office or window informing patrons of the availability of assistive listening systems.
2. At each door to an egress stairway, exit passageway and exit discharge, signage shall be provided in accordance with Section 1011.3.
3. At areas of refuge, signage shall be provided in accordance with Sections 1007.6.3 through 1007.6.5.
4. At areas for assisted rescue, signage shall be provided in accordance with Section 1007.8.3.

ICC/A117.1

301 General

301.1 Scope. The provisions of Chapter 3 shall apply where required by the scoping provisions adopted by the administrative authority or by Chapters 4 through 10.

302 Floor Surfaces

302.1 General. Floor surfaces shall be stable, firm, and slip resistant, and shall comply with Section 302. Changes in level in floor surfaces shall comply with Section 303.

302.2 Carpet. Carpet or carpet tile shall be securely attached and shall have a firm cushion, pad, or backing or no cushion or pad. Carpet or carpet tile shall have a level loop, textured loop, level cut pile, or level cut/uncut pile texture. The pile shall be 1/2 inch (13 mm) maximum in height. Exposed edges of carpet shall be fastened to the floor and shall have trim along the entire length of the exposed edge. Carpet edge trim shall comply with Section 303.

Fig. 302.2 Carpet on Floor Surfaces

302.3 Openings. Openings in floor surfaces shall be of a size that does not permit the passage of a 1/2 inch (13 mm) diameter sphere, except as allowed in Sections 407.4.3, 408.4.3, 409.4.3, 410.4, and 805.10. Elongated openings shall be placed so that the long dimension is perpendicular to the dominant

PASSERO ASSOCIATES
engineering architecture

direction of travel.

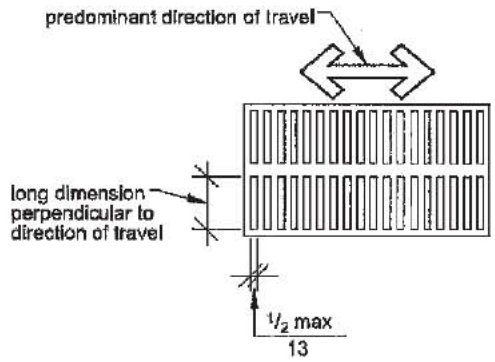

Fig. 302.3 Openings in Floor Surfaces

303 Changes in Level

303.1 General. Changes in level in floor surfaces shall comply with Section 303.

303.2 Vertical. Changes in level of 1/4 inch (6.4 mm) maximum in height shall be permitted to be vertical.

Fig. 303.2 Carpet on Floor Surfaces

303.3 Beveled. Changes in level greater than 1/4 inch (6.4 mm) in height and not more than 1/2 inch (13 mm) maximum in height shall be beveled with a slope not steeper than 1:2.

PASSERO ASSOCIATES
engineering architecture

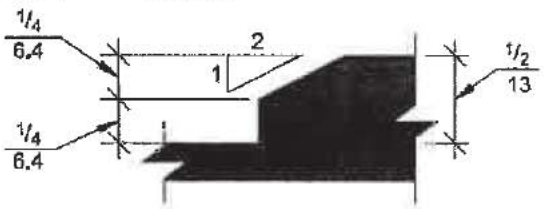

(a)

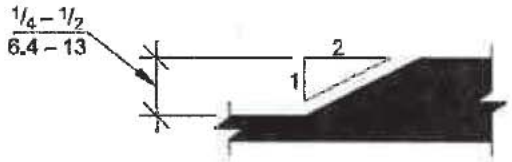

(b)

Fig. 303.3 Beveled Changes in Level

303.4 Ramped. Changes in level greater that 1/2 inch (13 mm) in height shall be ramped and shall comply with Section 405 or 406.

304 Turning Space

304.1 General. A turning space shall comply with Section 304.

304.2 Floor Surface. Floor surfaces of a turning space shall have a slope not steeper than 1:48 and shall comply with Section 302.

304.3 Size. Turning spaces shall comply with Section 304.3.1 or 304.3.2.

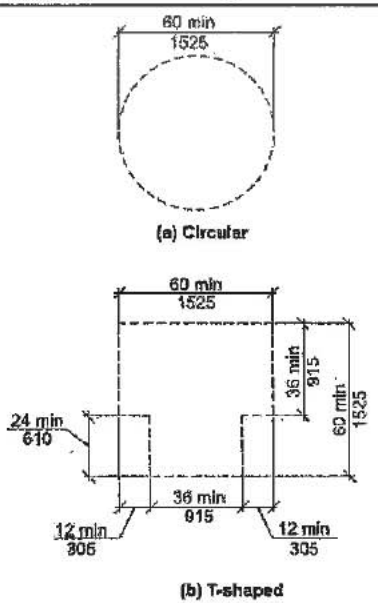

Fig. 304.3 Size of Turning Space

304.3.1 Circular Space. The turning space shall be a circular space with a 60-inch (1525 mm) minimum diameter. The turning space shall be permitted to include knee and toe clearance complying with Section 306.

304.3.2 T-Shaped Space. The turning space shall be a T-shaped space within a 60-inch (1525 mm) minimum square, with arms and base 36 inches (915 mm) minimum in width. Each arm of the T shall be clear of obstructions 12 inches (305 mm) minimum in each direction, and the base shall be clear of obstructions 24 inches (610 mm) minimum. The turning space shall be permitted to include knee and toe clearance complying with Section 306 only at the end of either the base or one arm.

304.4 Door Swing. Unless otherwise specified, doors shall be permitted to swing into turning spaces.

305 Clear Floor Space

305.1 General. A clear floor space shall comply with Section 305.

305.2 Floor Surfaces. Floor surfaces of a clear floor space shall have a slope not steeper than 1:48 and shall comply with Section 302.

305.3 Size. The clear floor space shall be 48 inches (1220 mm) minimum in length and 30 inches (760 mm) minimum in width.

PASSERO ASSOCIATES
engineering architecture

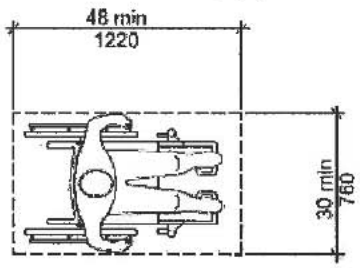

Fig. 305.3 Size of Clear Floor Space

305.4 Knee and Toe Clearance. Unless otherwise specified, clear floor space shall be permitted to include knee and toe clearance complying with Section 306.

305.5 Position. Unless otherwise specified, the clear floor space shall be positioned for either forward or parallel approach to an element.

PASSERO ASSOCIATES
engineering architecture

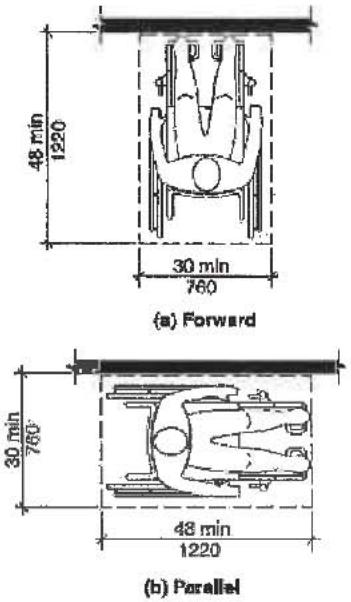

Fig. 305.5 Position of Clear Floor Space

305.6 Approach. One full, unobstructed side of the clear floor space shall adjoin or overlap an accessible route or adjoin another clear floor space.

305.7 Alcoves. If a clear floor space is in an alcove or otherwise confined on all or part of three sides, additional maneuvering clearances complying with Sections 305.7.1 and 305.7.2 shall be provided, as applicable.

PASSERO ASSOCIATES
engineering architecture

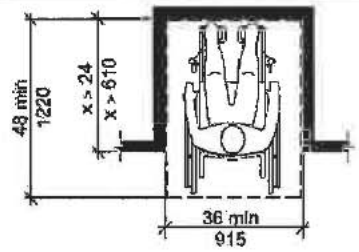

(a) Forward Approach

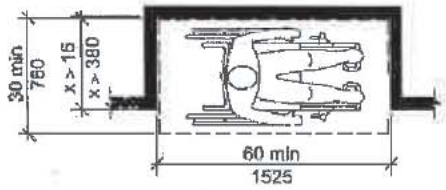

(b) Parallel Approach

Fig. 305.7 Maneuvering Clearance in an Alcove

305.7.1 Parallel Approach. Where the clear floor space is positioned for a parallel approach, the alcove shall be 60 inches (1525 mm) minimum in width where the depth exceeds 15 inches (380 mm).

305.7.2 Forward Approach. Where the clear floor space is positioned for a forward approach, the alcove shall be 36 inches (915 mm) minimum in width where the depth exceeds 24 inches (610 mm).

306 Knee and Toe Clearance

306.1 General. Where space beneath an element is included as part of clear floor space at an element, clearance at an element, or a turning space, the space shall comply with Section 306. Additional space beyond knee and toe clearance shall be permitted beneath elements.

306.2 Toe Clearance.

PASSERO ASSOCIATES
engineering architecture

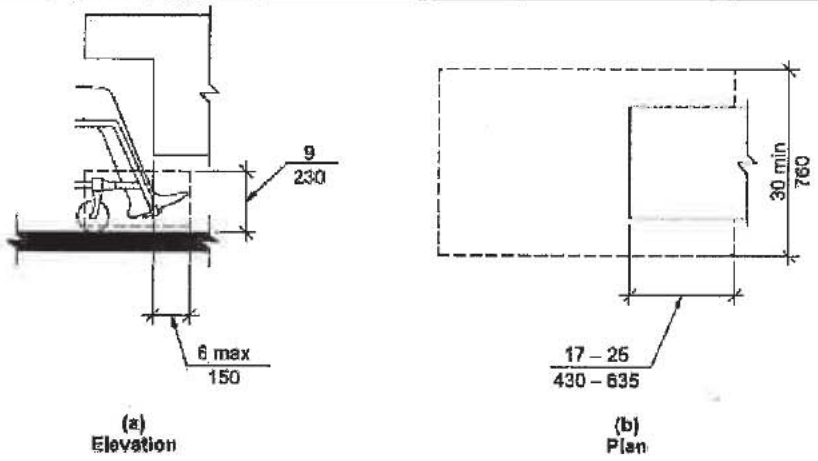

Fig. 306.2 Toe Clearance

306.2.1 General. Space beneath an element between the floor and 9 inches (230 mm) above the floor shall be considered toe clearance and shall comply with Section 306.2.

306.2.2 Maximum Depth. Toe clearance shall be permitted to extend 25 inches (635 mm) maximum under an element.

306.2.3 Minimum Depth. Where toe clearance is required at an element as part of a clear floor space, the toe clearance shall extend 17 inches (430 mm) minimum beneath the element.

306.2.4 Additional Clearance. Space extending greater than 6 inches (150 mm) beyond the available knee clearance at 9 inches (230 mm) above the floor shall not be considered toe clearance.

306.2.5 Width. Toe clearance shall be 30 inches (760 mm) minimum in width.

306.3 Knee Clearance.

PASSERO ASSOCIATES
engineering architecture

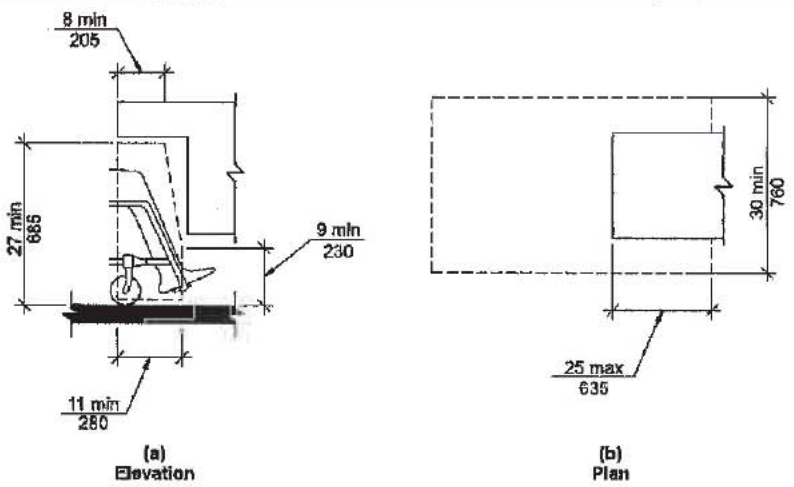

Fig. 306.3 Knee Clearance

306.3.1 General. Space beneath an element between 9 inches (230 mm) and 27 inches (685 mm) above the floor shall be considered knee clearance and shall comply with Section 306.3.

306.3.2 Maximum Depth. Knee clearance shall be permitted to extend 25 inches (635 mm) maximum under an element at 9 inches (230 mm) above the floor.

306.3.3 Minimum Depth. Where knee clearance is required beneath an element as part of a clear floor space, the knee clearance shall be 11 inches (280 mm) minimum in depth at 9 inches (230 mm) above the floor, and 8 inches (205 mm) minimum in depth at 27 inches (685 mm) above the floor.

306.3.4 Clearance Reduction. Between 9 inches (230 mm) and 27 inches (685 mm) above the floor, the knee clearance shall be permitted to be reduced at a rate of 1 inch (25 mm) for each 6 inches (150 mm) in height.

306.3.5 Width. Knee clearance shall be 30 inches (760 mm) minimum in width.

307 Protruding Objects

307.1 General. Protruding objects on circulation paths shall comply with Section 307.

307.2 Protrusion Limits. Objects with leading edges more than 27 inches (685 mm) and not more than 80 inches (2030 mm) above the floor shall protrude 4 inches (100 mm) maximum horizontally into the circulation path.

EXCEPTIONS:

1. Handrails shall be permitted to protrude 4½ inches (115 mm) maximum.
2. Door closers and door stops shall be permitted to be 78 inches (1980 mm) minimum above the floor.

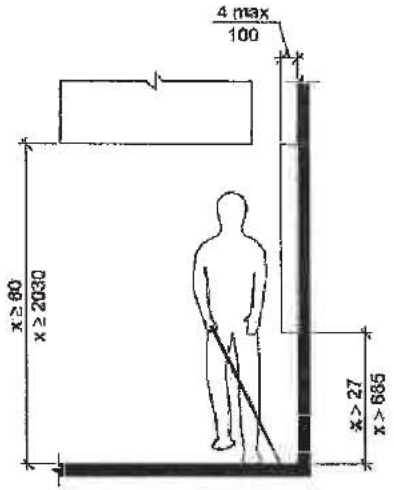

Fig. 307.2 Limits of Protruding Objects

307.3 Post-Mounted Objects. Objects on posts or pylons shall be permitted to overhang 4 inches (100 mm) maximum where more than 27 inches (685 mm) and not more than 80 inches (2030 mm) above the floor. Objects on multiple posts or pylons where the clear distance between the posts or pylons is greater than 12 inches (305 mm) shall have the lowest edge of such object either 27 inches (685 mm) maximum or 80 inches (2030 mm) minimum above the floor.

PASSERO ASSOCIATES
engineering architecture

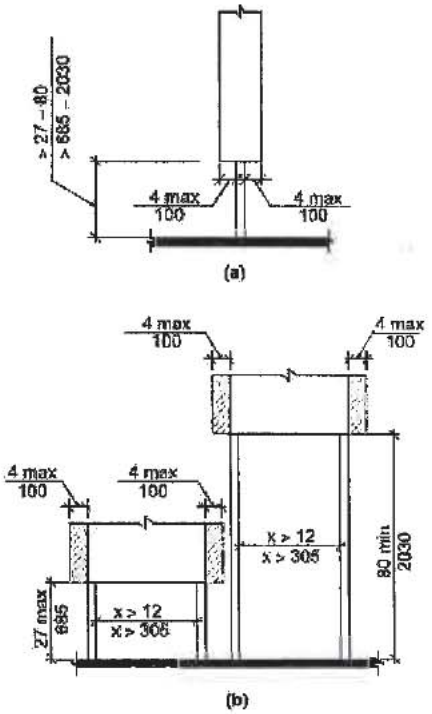

Fig. 307.3 Post-Mounted Protruding Objects

307.4 Reduced Vertical Clearance. Guardrails or other barriers shall be provided where object protrusion is beyond the limits allowed by Sections 307.2 and 307.3, and where the vertical clearance is less than 80 inches (2030 mm) above the floor. The leading edge of such guardrail or barrier shall be 27 inches (685 mm) maximum above the floor.

PASSERIO ASSOCIATES
engineering architecture

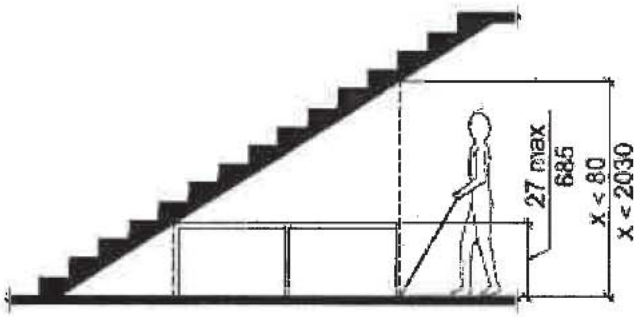

Fig. 307.4 Reduced Vertical Clearance

307.5 Required Clear Width. Protruding objects shall not reduce the clear width required for accessible routes.

308 Reach Ranges

308.1 General. Reach ranges shall comply with Section 308.

308.2 Forward Reach.

308.2.1 Unobstructed. Where a forward reach is unobstructed, the high forward reach shall be 48 inches (1220 mm) maximum and the low forward reach shall be 15 inches (380 mm) minimum above the floor.

PASSERO ASSOCIATES
engineering architecture

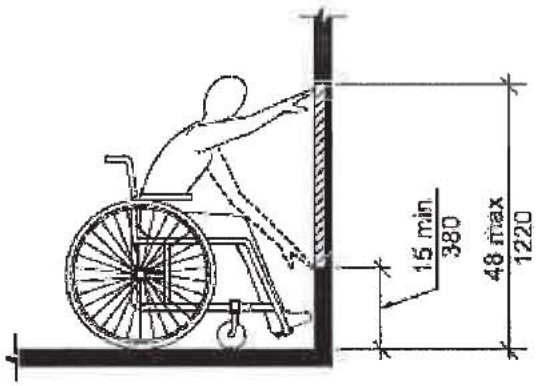

Fig. 308.2.1 Unobstructed Forward Reach

308.2.2 Obstructed High Reach. Where a high forward reach is over an obstruction, the clear floor space shall extend beneath the element for a distance not less than the required reach depth over the obstruction. The high forward reach shall be 48 inches (1220 mm) maximum where the reach depth is 20 inches (510 mm) maximum. Where the reach depth exceeds 20 inches (510 mm), the high forward reach shall be 44 inches (1120 mm) maximum, and the reach depth shall be 25 inches (635 mm) maximum.

PASSERO ASSOCIATES
engineering architecture

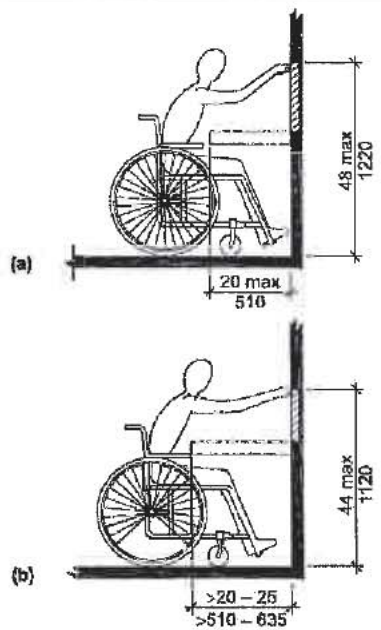

Fig. 308.2.2 Obstructed High Forward Reach

308.3 Side Reach.

308.3.1 Unobstructed. Where a clear floor space allows a parallel approach to an element and the side reach is unobstructed, the high side reach shall be 48 inches (1220 mm) maximum and the low side reach shall be 15 inches (380 mm) minimum above the floor.

EXCEPTION: Existing elements shall be permitted at 54 inches (1370 mm) maximum above the floor.

PASSERO ASSOCIATES
engineering architecture

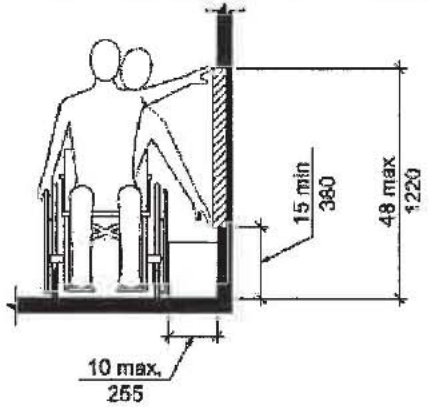

Fig. 308.3.1 Unobstructed Side Reach

308.3.2 Obstructed High Reach. Where a clear floor space allows a parallel approach to an object and the high side reach is over an obstruction, the height of the obstruction shall be 34 inches (865 mm) maximum and the depth of the obstruction shall be 24 inches (610 mm) maximum. The high side reach shall be 48 inches (1220 mm) maximum for a reach depth of 10 inches (255 mm) maximum. Where the reach depth exceeds 10 inches (255 mm), the high side reach shall be 46 inches (1170 mm) maximum for a reach depth of 24 inches (610 mm) maximum.

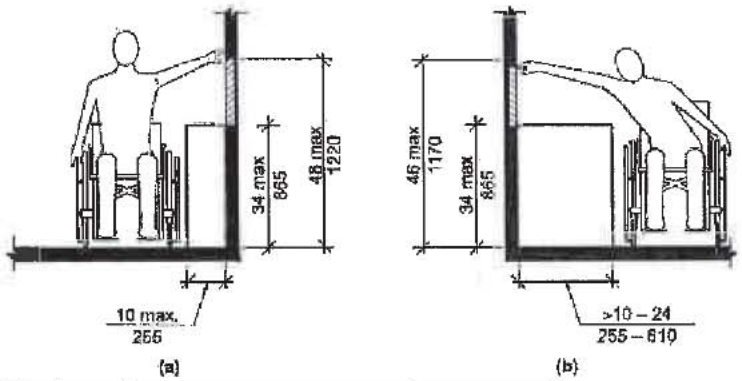

PASSERO ASSOCIATES
engineering architecture

		Fig. 308.3.2 Obstructed High Side Reach **309 Operable Parts** **309.1 General.** Operable parts required to be accessible shall comply with Section 309. **309.2 Clear Floor Space.** A clear floor space complying with Section 305 shall be provided. **309.3 Height.** Operable parts shall be placed within one or more of the reach ranges specified in Section 308. **309.4 Operation.** Operable parts shall be operable with one hand and shall not require tight grasping, pinching, or twisting of the wrist. The force required to activate operable parts shall be 5.0 pounds (22.2 N) maximum. **EXCEPTION:** Gas pump nozzles shall not be required to provide operable parts that have an activating force of 5.0 pounds (22.2 N) maximum.
44	2010 NYS ECCC & IECC 2012	**2010 NYS ECCC** **SECTION 101 SCOPE AND GENERAL REQUIREMENTS** **101.4 Applicability.** The provisions of this code shall apply to the construction of buildings. This code shall apply as provided in this Section 101.4. Where, in any specific case, different sections of this code specify different materials, methods of construction or other requirements, the most restrictive shall govern. Where there is a conflict between a general requirement and a specific requirement, the specific requirement shall govern. **101.4.1 Existing buildings.** Except as specified in this chapter, this code shall not be used to require the removal, *alteration* or abandonment of, nor prevent the continued use and maintenance of, an existing building or building system lawfully in existence at the time of adoption of this code. **101.4.3 Additions, alterations or renovations.** It is intended that this code apply to additions, alterations, and renovations to existing residential building in all cases where the 2009 IECC would apply, and that this code shall apply to additions, alterations and renovations to existing commercial buildings in all cases where ASHRAE 90.1-2007 would apply. Additions, alterations or renovations to an existing building, building system or portion thereof shall conform to the provisions of this code as they relate to new construction without requiring the unaltered portion(s) of the existing building or building system to comply with this code. Additions, alterations or renovations shall not create an unsafe or hazardous condition or overload existing building systems. An addition shall be deemed to comply with this code if (1) the addition alone complies with this code, or (2) the existing building and addition considered as a single building comply with this code. **Exceptions:** The following need not comply with the provisions of this code, provided the energy use of the building is not increased: 1. Storm windows installed over existing fenestration. 2. Glass only replacements in an existing sash and frame, provided the *U*-factor and the solar heat gain coefficient (SHGC) will be equal to or lower than before the glass replacement. 3. Alterations, renovations or repairs to roof/ceiling, wall or floor cavities which are insulated to full depth with insulation having a minimal nominal value of R-3.0/inch. 4. Alterations, renovations or repairs to walls and floors, where the existing structure is without framing cavities and no new framing cavities are

		created. 5. Reroofing where neither the sheathing nor the insulation is exposed. Roofs without insulation in the cavity and where the sheathing or insulation is exposed during reroofing shall be insulated either above or below the sheathing. 6. Replacement of existing doors that separate *conditioned space* from the exterior shall not require the installation of a vestibule or revolving door, provided, however, that an existing vestibule that separates a *conditioned space* from the exterior shall not be removed. 7. An alteration that replaces less than 50 percent of the luminaires in a space, provided that such alteration does not increase the installed interior lighting power. 8. An alteration that replaces only the bulb and ballast within the existing luminaires in a space, provided that such *alteration* does not increase the installed interior lighting power. **101.4.4 Change in occupancy or use.** Spaces undergoing a change in occupancy that would result in an increase in demand for either fossil fuel or electrical energy shall comply with this code. Where the use in a space changes from one use in Table 505.5.2 to another use in Table 505.5.2, the installed lighting wattage shall comply with Section 505.5. **101.4.5 Change in space conditioning.** Any nonconditioned space that is altered to become conditioned space shall be required to be brought into full compliance with this code. **101.4.6 Statutory exemptions and limitations.** The provisions of sections 101.4.1, 101.4.2, 101.4.4, 101.4.5 and 101.4.6, of this code are subject to any provisions of Article 11 of the New York State Energy Law, as in effect at the time of adoption of this code and as thereafter amended from time to time, which may (1) require certain buildings to be exempt from this code or (2) limit the applicability of this code in the case of renovations of existing buildings. If the provisions of Article 11 of the New York State Energy Law, as in effect at the time of any alteration, renovation or repair to an existing building, require that such building be exempt from this code, then such alteration, renovation or repair to such building need not comply with this code. If the provisions of Article 11 of the New York State Energy Law, as in effect at the time of any alteration, renovation or repair to an existing building, limit the applicability of this code to such alteration, renovation or repair, then the applicability of this code to such alteration, renovation or repair shall be limited to the extent required by the provisions of Article 11 of the New York State Energy Law, as then in effect. **Example:** New York State Energy Law section 11-103(b), as in effect at the time of adoption of this code, provides that in the case of the renovation of an existing building, this code (1) shall apply only if the renovation is a "substantial renovation" (i.e., only if more than fifty percent of any "building subsystem" is replaced), and (2) shall apply only to that portion of the "building subsystem" which is being replaced. If New York State Energy Law section 11-103(b) remains in effect at the time of any alteration, renovation or repair to an existing building, the applicability of this code to such alteration, renovation or repair shall be limited to the extent required by said section 11-103(b).
45	2702.1	**SECTION 2702 EMERGENCY AND STANDBY POWER SYSTEMS [F]** **2702.1 Installation.** Emergency and standby power systems required by this code or the *Fire Code of New York State* shall be installed in accordance with this code, NFPA 110 and 111. **[F]** **2702.1.1 Stationary generators.** Emergency and standby power generators shall be listed in accordance with UL 2200. **[F]** **2702.2 Where required.** Emergency and standby power systems shall be provided where required by Sections 2702.2.1 through 2702.2.20. **[F]** **2702.2.2 Smoke control systems.** Standby power shall be provided for smoke control systems in accordance with Section 909.11. **[F]** **2702.2.3 Exit signs.** Emergency power shall be provided for exit signs in accordance with Section 1011.5.3. **[F]** **2702.2.4 Means of egress illumination.** Emergency power shall be provided for means of egress illumination in accordance with Section 1006.3. **[F]** **2702.3 Maintenance.** Emergency and standby power systems shall be maintained and tested in accordance with the *Fire Code of New York State.* **[F]**

PASSERO ASSOCIATES
engineering architecture

<table>
<tr><td>46</td><td>2702.2.2</td><td>2702.2.2 Smoke control systems. Standby power shall be provided for smoke control systems in accordance with Section 909.11. [F]</td></tr>
<tr><td>47</td><td>2902.1</td><td>SECTION 2902 MINIMUM PLUMBING FACILITIES

TABLE 2902.1 MINIMUM NUMBER OF REQUIRED PLUMBING FIXTURES[a] (See Sections 2902.2 and 2902.3) [P]

<table>
<tr><th rowspan="2">NO.</th><th rowspan="2">CLASSIFIC-ATION</th><th rowspan="2">OCCUP-ANCY</th><th rowspan="2">DESCRIP-TION</th><th colspan="2">WATER CLOSETS</th><th colspan="2">LAVATORIES</th><th rowspan="2">DRINKING FOUNTAINS</th><th rowspan="2">OTHER[f]</th></tr>
<tr><th>MALE</th><th>FEMALE</th><th>MALE</th><th>FEMALE</th></tr>
<tr><td>6</td><td>Mercantile (see Sections 2902.2, 2902.4, 2902.4.1 and 2902.4.2)</td><td>M</td><td>Retail stores, service stations, shops, salesrooms, markets and shopping centers</td><td>1 per 500</td><td>1 per 500</td><td>1 per 750</td><td>1 per 750</td><td>1 per 1,000</td><td>1 service sink</td></tr>
</table>

2902.1.1 Unisex toilet and bath fixtures. Fixtures located within unisex toilet bathing rooms complying with Chapter 11 of this Code are permitted to be included in determining the minimum required number of fixtures for assembly and mercantile occupancies. [P]
2902.2 Separate facilities. Where plumbing fixtures are required, separate facilities shall be provided for each sex. [P]

Exceptions:

2. Separate facilities shall not be required in structures or tenant spaces with a total occupant load, including both employees and customers, of 15 or less.
3. Separate facilities shall not be required in mercantile occupancies in which the maximum occupant load is 50 or less.</td></tr>
</table>

Appendix B: Architectural Program

A SEPARATE "APPENDIX B" SHALL BE COMPLETED FOR EACH SEPARATE BUILDING AND/OR FACILITY INCLUDED IN THE ORGANIZATION'S BUSINESS PLAN

COMPANY INFORMATION

Business Name:	Citiva Medical
Facility Type:	Manufacturing Facility ☐ Dispensing Facility ☑
Use and Occupancy Classification:	Mercantile
Building Construction Type and Classification:	IIIB
Facility Address:	35 First Ave NY, NY 10003
Primary Contact Telephone number:	Michael Caridi 1-516-852-2549
Primary Contact Fax number:	mcaridi@citivamedical.com

PART I – ARCHITECTURAL PROGRAM & CONSTRUCTION TIMELINE:

Applicant shall identify planning requirements, including but not limited to:

- ☐ TOWN BOARD APPROVAL
- ☑ PLANNING BOARD APPROVAL
- ☐ ZONING BOARD OF APPEALS APPROVAL
- ☑ PREPARATION OF CONSTRUCTION DOCUMENTS
- ☑ BUILDING PERMIT
- ☑ BIDDING PHASE
- ☑ CONTRACT AWARD PHASE PER EACH APPLICABLE CONTRACTOR (Identify all that apply)
- ☑ COMMENCEMENT OF CONSTRUCTION
- ☑ COMPLETION OF CONSTRUCTION

Appendix B – Architectural Program

PART II – SITE PLAN(S)

Applicant shall provide the appropriate details for each of the following by identifying the location and dimension on the Site Plan attached to the application for each building location.

- ☑ Entrance and Exits
- ☑ Public Parking Spaces
- ☑ Staff Parking Spaces
- ☑ Accessible Parking Spaces
- ☑ Accessible Route(s)
- ☑ Fire Lane and/or Fire Apparatus Road
- ☑ Percentage of Green Space
- ☑ Location of Emergency Power Systems
- ☑ Loading & Unloading
- ☑ Security Gates & Fences

PART III – ENERGY SOURCES & ENGINEERING SYSTEMS:

Applicant shall provide the following minimum information to outline the specifications relating to the energy sources and engineering systems of each building included in the application.

Energy Source:

☑ Natural Gas ☐ Oil ☑ Electric
☐ Solar ☐ Other _____

Engineering Systems:

☑ Heating System: Type Gas, Size Varies Efficiency 80% e.t.,
Ventilation Requirements NYSMC Occupancy Compliance

☑ Cooling System: Type dx coolin, Size Varies Efficiency 9.5-13 SEER
Ventilation Requirements NYSMC Occupancy Compliance

☑ Ventilation & Humidification Systems:
Type Ultrasoni, Size Varies, Efficiency 100%,
Ventilation Requirements NYSMC Occupancy Compliance

☑ Electrical Distribution Available Yes On-Site

☑ Water Supply: Municipal Water Service X or Private Well Water _____

☑ Sewage: Municipal Sewer System X or Private Septic System _____

☑ Emergency Power System:
Type NG, Size Varies Efficiency 60-80%,

Appendix B – Architectural Program

PART IV – BUILDING CODE COMPLIANCE: (pages 3-13)

CHECK ALL APPLICABLE CODES FOR THE FACILITY

- [x] 2010 BUILDING CODE OF NYS
- [x] 2010 FIRE CODE OF NYS
- [x] 2010 PLUMBING CODE OF NYS
- [x] 2010 MECHANICAL CODE OF NYS
- [x] 2010 FUEL GAS CODE OF NYS
- [x] 2010 PROPERTY MAINTENANCE CODE OF NYS
- [x] 2010 ENERGY CONSERVATION CONSTRUCTION CODE OF NYS
- [x] 2012 IECC COMMERCIAL PROVISIONS
- [x] 2010 EXISTING BUILDING CODE OF NYS
- [x] NEC NATIONAL ELECTRIC CODE, (Specify Applicable Version)
- [x] 2014 NY CITY CONSTRUCTION CODE
- [ ] 2008 NY CITY CONSTRUCTION CODE
- [ ] 1968 NY CITY CONSTRUCTION CODE
- [x] NFPA 101-06 LIFE SAFETY CODE
- [x] ICC/ANSI A117.1-03 ACCESSIBLE AND USABLE BUILDINGS AND FACILITIES
- [ ] OTHER

Appendix B – Architectural Program

Select Project Type:
Check all that apply. Refer to the Existing Building Code for definitions.

- ☐ New Building
- ☐ Repair
- ☐ Alteration Level 1
- ☐ Alteration Level 2
- ☑ Alteration Level 3
- ☑ Change of Occupancy
- ☐ Addition
- ☐ Historic Building
- ☐ Demolition
- ☐ Chapter 3. Prescriptive Compliance Method
- ☐ Chapter 13. Performance Compliance Method

Select Work Involved:
Check all that apply.

- ☑ General Construction
- ☐ Roofing
- ☐ Asbestos Abatement/Environmental
- ☑ Fire Alarm
- ☑ Structural
- ☑ Mechanical
- ☑ Plumbing
- ☑ Electrical
- ☐ Site Work
- ☐ Sprinkler
- ☐ Elevators
- ☐ Other:_____

CODE COMPLIANCE REVIEW

Applicant shall provide all applicable information in regards to the code topic and section listed below.

1. Code Compliance Review is based on the 2010 NY State Building Code for New Construction. If any other building code applies to the location or type of construction, provide applicable code and sections that most closely relates and references the code topic and information in the code sections listed below. Provide appropriate abbreviations for other applicable codes, such as: **FC:** ***Fire Code,*** **PC:** ***Plumbing Code,*** **MC:** ***Mechanical Code,*** **FGC:** ***Fuel Gas Code,*** **ECCC:** ***Energy Conservation Code.***
2. Provide the Required standard for each applicable code section. (i.e.: area, quantity, classification type, materials, hourly separation, etc.). If section does not apply, indicate one of the following with explanation: **NA:** *Not Applicable,* **NR:** *Not Required,* **NP:** *Not Permitted*
3. Provide your facilities "Actual" value for each required standard as per applicable code section.

No.	Topic	NYS Building Code Section	Other Code[1] (as Stated Above) & Section	Minimum Information Required to be Identified for this building/facility on the Building or Site Plan(s)	Required Code Value[2] /Allowed Code Value	Facility's Actual Value[3]
1	Use & Occupancy Classification	302.1 - 312	NYCC Chapter 3	Use & occupancy of this facility. Identify all applicable materials, class and quantities regarding Table 307.1.	Mercantile	Mercantile

Appendix B – Architectural Program

No.	Topic	NYS Building Code Section	Other Code[1] (as Stated Above) & Section	Minimum Information Required to be Identified for this building/facility on the Building or Site Plan(s)	Required Code Value[2] /Allowed Code Value	Facility's Actual Value[3]
2	Combustible Storage	413		All combustible storage areas and rooms, as per applicable Building and Fire Codes. Identify all combustible stored materials, area and room dimensions, all required fire separations, and exit requirements.	N/A	N/A
3	Hazardous Materials	414		All hazardous materials stored or used as per applicable Building and Fire Codes. Identify all combustible stored materials, area and room dimensions, all required fire separations, and exit requirements.	N/A	N/A
4	Hazardous Materials Control Areas	414.2		Provide additional information indicating number, size, materials stored, and quantity of each material.	N/A	N/A
5	Building Area & Height	501-507	NYCC 501-507	Provide the building area & height Provide all calculations and cite applicable code sections for increased Building Area & Heights allowed per building code(s).	1 Story 9,000 SF	1 Story + 1 Basement 2,092 SF
6	Incidental Use Areas	508.2		Identify all Incidental Use Areas and required fire separation of occupancies on Building Plans.	N/A	N/A

Appendix B – Architectural Program

No.	Topic	NYS Building Code Section	Other Code[1] (as Stated Above) & Section	Minimum Information Required to be Identified for this building/facility on the Building or Site Plan(s)	Required Code Value[2] /Allowed Code Value	Facility's Actual Value[3]
7	Mixed Occupancies	508.3	NYCC 508	Provide analysis with code cited, and required fire separation of occupancies. Identify required fire separation of occupancies on Building Plan(s).	All applicable sections Refer to attached for details	Fully compliant Mercantile / Buisness
8	Nonseparated Uses	508.3.2	NYCC 508.3	Provide analysis with code cited, and required fire separation of occupancies. Identify required fire separation of occupancies on Building Plan(s).	All applicable sections Refer to attached for details	Fully compliant Mercantile / Buisness - Accessory Storage
9	Separated Uses (Ratio < 1)	508.3.3		Provide analysis with code cited, and required fire separation of occupancies. Identify required fire separation of occupancies on Building Plan(s).	N/A	N/A
10	Construction Classification	602	NYC 602	Provide Construction Classification per each building included in Application.	IIIB	IIIB
11	Fire Resistance Rating Reqm't for Building Elements	Table 601	NYCC Table 601	Provide Fire Resistance Rating per each building element as per Table 601. Identify rating & elements on Building Plans.	2hr exterior bearing 0-hr	Existing 2 hr exterior bearing 0-hr

Appendix B – Architectural Program

No.	Topic	NYS Building Code Section	Other Code[1] (as Stated Above) & Section	Minimum Information Required to be Identified for this building/facility on the Building or Site Plan(s)	Required Code Value[2] /Allowed Code Value	Facility's Actual Value[3]
12	Exterior Wall Fire-Resistance Rating	Table 602	NYCC Table 602	Identify required fire resistance rating of exterior walls on Building Plan(s).	2-hr Refer to attached for details	3-hr
13	Exterior Fire Separation Distance	Table 602	NYCC Table 602	Identify required fire separation distance of exterior walls between Buildings on Plan.	0 feet = 2-hr separation	3-hr Firewall
14	Fire Walls	705	NYCC 705 + 706	Provide code information and identify all applicable required Fire Wall(s) and fire resistance requirement on Building Plans.	All applicable sections Refer to attached for details	Fully Compliant
15	Fire Barriers	706		Provide code information and identify all applicable required Fire Barrier(s) and fire resistance requirement on Building Plans.	N/A	N/A
16	Shaft Enclosures	707		Provide code information and identify all applicable required Shaft Wall(s) and fire resistance requirement on Building Plans.	N/A	N/A
17	Fire Partitions	708		Provide code information and identify all applicable required Fire Partition(s) and fire resistance requirement on Building Plans.	N/A	N/A

Appendix B – Architectural Program

No.	Topic	NYS Building Code Section	Other Code[1] (as Stated Above) & Section	Minimum Information Required to be Identified for this building/facility on the Building or Site Plan(s)	Required Code Value[2] /Allowed Code Value	Facility's Actual Value[2]
18	Horizontal Assemblies	711		Provide code information and identify all applicable required Horizontal Assemblies and fire resistance requirement on Building Plans.	N/A	N/A
19	Fire Protection: Sprinkler System	903		Indicate Type of Sprinkler System: ☐ NFPA 13 ☐ NFPA 13 R ☐ NFPA 13D Provide code information of all applicable requirements for Automatic Sprinkler Systems with code section cited.	N/A	N/A
20	Alt. Fire Extinguishing System	904		Provide code information of all applicable requirements for Alternative Automatic Fire-Extinguishing Systems with code section(s) cited.	N/A	N/A
21	Standpipe System	905		Provide code information of all applicable requirements for Standpipe Systems with code section(s) cited.	N/A	N/A
22	Fire Alarm & Detection Systems	907	NYCC 907	Provide code information of all applicable requirements for Fire Alarm System(s) with code section cited. Indicate Type of Fire Alarm System ☑ Addressable ☐ Hardwired (zoned)	All applicable sections Refer to attached for details	Fully compliant

Appendix B – Architectural Program

No.	Topic	NYS Building Code Section	Other Code[1] (as Stated Above) & Section	Minimum Information Required to be Identified for this building/facility on the Building or Site Plan(s)	Required Code Value[2] /Allowed Code Value	Facility's Actual Value[3]
23	Emergency Alarm System	908		Provide code information of all applicable requirements for Emergency Alarm Systems with code section cited.	N/A	N/A
24	Fire Department Connections	912	NYCC 912	Identify Fire Department connections in accordance with NFPA applicable standard.	All applicable sections. Refer to attached for details	Fully compliant
25	Exits	1001.1 &2	NYCC 1001.1 +2	Identify on the Building Plans and documents, per each door, the following information: door width, door height, direction of swing, type of construction, hourly rating, and door closures.	All applicable sections Refer to attached for details	See plans
26	Occupant Load	1004 & Table 1004.1.1	NYCC 1004	Identify the use/name of each room, dimensions of each room, and Occupant Loads per each room on the Building Plans.	Values per table 1004.1.1 Refer to attached for details	Total occupant load: 40
27	Egress Width	1005	NYCC 1005	Provide egress widths & cite applicable code section(s) and requirement(s) on the Building Plans	Corridor: 44" min. Stair: 36" min. w/ occ.< 50	Fully Compliant
28	Accessible Means of Egress	1007.1	NYCC 1007.1	Provide accessible means of egress as per Section 1007 & cite applicable code section(s) and requirement(s) on the Building Plans.	(2) Means of Egress Refer to attached for details	(2) Means of Egress All means of egress to meet req.'s of section 1007

Appendix B – Architectural Program

No.	Topic	NYS Building Code Section	Other Code[1] (as Stated Above) & Section	Minimum Information Required to be Identified for this building/facility on the Building or Site Plan(s)	Required Code Value[2] /Allowed Code Value	Facility's Actual Value[3]
29	Doors, Gates, and Turnstiles	1008	NYCC 1008	Means of egress doors shall meet the requirements of this section.	Refer to attached for details	Fully Compliant, See plans
30	Interior Stairs	1009	NYCC 1009	Identify the following information for each stairway on the Building Plan(s): the width of stairways; the height, width, depth and number of risers and treads; dimensions of landings; stairway construction type; and handrail height.	All applicable sections Refer to attached for details	Fully compliant See plans
31	Ramps	1010.1		Identify the following information of each ramp, on the Building Plan(s): width; total vertical rise; length of ramp; and handrail height.	N/A	N/A
32	Common Path of Travel	1014.3	NYCC 1014.3	Identify on the Building Plan(s): the length of the "Common Path of Travel" per each room as per applicable building code requirements.	75'-0" max.	70'-6"
33	Exit Doorway Arrangement	1015	NYCC 1015	Identify on the Building Plan(s): applicable building code requirements for all Exits and Exit Access Doorways per each room and required exits in all buildings.	All applicable sections	Fully Compliant, See plans
34	Corridor Fire Rating	1017.1	NYCC 1018.1	Identify, on the Building Plan(s): all corridors with required fire resistance and the applicable fire rating.	All applicable sections.	Fully Compliant, See plans

Appendix B – Architectural Program

No.	Topic	NYS Building Code Section	Other Code[1] (as Stated Above) & Section	Minimum Information Required to be Identified for this building/facility on the Building or Site Plan(s)	Required Code Value[2] /Allowed Code Value	Facility's Actual Value[3]
35	Corridor Width	1017.2	NYCC 1018.2	Identify on the Building Plan(s): the width of all corridors. Provide applicable code section(s) and requirement(s).	44" min. per section 1017.2	52"
36	Dead End Corridor	1017.3	NYCC 1018.4	Corridors shall not exceed the maximum dead end corridor length as per applicable code.	20'-0" max.	19'-8"
37	Number of Exits and Continuity	1019	NYCC 1021	Identify on the Building Plan(s): required number of exits, continuity and arrangement as per the applicable code requirements.	2 min.	2
38	Vertical Exit Enclosures	1020	NYCC 1022	Identify on the Building Plan(s): all applicable code requirements for each Vertical Exit Enclosure.	All applicable sections	Fully compliant
39	Exit Passageways	1021	NYCC 1023	Identify on the Building Plan(s): all applicable code requirements for each Exit Passageway.	All applicable sections	Fully Compliant, See plans
40	Horizontal Exits	1022	NYCC 1025	Identify on the Building Plan(s): all applicable code requirements for each Horizontal Exit.	All applicable sections	Fully Compliant, See plans

Appendix B – Architectural Program

No.	Topic	NYS Building Code Section	Other Code[1] (as Stated Above) & Section	Minimum Information Required to be Identified for this building/facility on the Building or Site Plan(s)	Required Code Value[2] /Allowed Code Value	Facility's Actual Value[3]
41	Exterior Exit Ramps & Stairways	1023		Identify on the Building Plan(s): all applicable code requirements for each exterior exit ramps and stairways.	N/A	N/A
42	Exit Discharge	1024		Identify on the Building Plan(s): all applicable code requirements for each Exit Discharge.	N/A	N/A
43	Accessibility	1101.1 - 1110 & ICC/A117. 1(03)	NYCC 1001.1-1110	Identify on the Building Plan(s): all applicable code requirements such that the design and construction of each building/facility provides accessibility to physically disabled persons.	All applicable sections Refer to attached for details	Fully compliant
44	Energy Conservation	2010 NYS ECCC & IECC 2012	NYC ECC	Identify the R-Value and U-Value of each construction component and assembly of the building envelope as required in the applicable energy and building code(s).	All applicable sections Refer to attached for details	Fully compliant
45	Emergency & Standby Power	2702.1	NYCC 2702.1	Identify emergency & Standby Power locations and specifications of the system to be provided.	All applicable sections Refer to attached for details	Fully compliant
46	Smoke Control Systems	2702.2.2	NYCC 2702.2	Identify the Standby power for smoke control systems in accordance with Section 909.11 of NYS Building Code.	All applicable sections Refer to attached for details	Fully compliant

Appendix B – Architectural Program

No.	Topic	NYS Building Code Section	Other Code[1] (as Stated Above) & Section	Minimum Information Required to be Identified for this building/facility on the Building or Site Plan(s)	Required Code Value[2] /Allowed Code Value	Facility's Actual Value[3]
47	Plumbing Fixture Count	2902.1	NYCPC	Identify on the Building Plan(s): the minimum plumbing facilities as per applicable plumbing code(s).	1 for each. Refer to attached for details	1 for each, see plans
48	Available Street Water Pressure			Provide the available street or well water pressure.		60 psi
49	Fire Apparatus Access Road	FC503.1		Identify on the Site Plan: Fire Apparatus Road, Fire Lane and other Fire Service requirements per applicable Building and Fire Codes.	All applicable sections	Fully compliant

PASSERO ASSOCIATES
engineering architecture

<table>
<tr><th>NO.</th><th>NYC BUILDING CODE SECTION</th><th>REQUIRED CODE VALUE / ALLOWED CODE VALUE</th></tr>
<tr><td>7</td><td>508.1</td><td>508.1 General.
Each portion of a building shall be individually classified in accordance with Section 302.1. Where a building contains more than one occupancy group, the building or portion thereof shall comply with the applicable provisions of Section 508.2, 508.3 or 508.4, or a combination of these sections.
Exceptions:
1.Occupancies separated in accordance with Section 510.
2.Where required by Table 415.5.2, areas of Group H-1, H-2 and H-3 occupancies shall be located in a detached building or structure.
3.Where identified in Table 509, rooms or spaces shall be treated as incidental uses.
4.Where not identified in Table 509, mechanical and/or electrical equipment rooms shall be permitted to be classified as the occupancy within which they are located, orat the option of the applicant, classified as Group F-2 occupancy in accordance with Section 306.3.</td></tr>
<tr><td>8</td><td>508.3</td><td>508.3 Nonseparated occupancies. Buildings or portions of buildings that comply with the provisions of this section shall qualify as nonseparated occupancies.
508.3.1 Occupancy classification.
Nonseparated occupancies shall be individually classified in accordance with Section 302.1. The requirements of this code shall apply to each portion of the building based on the occupancy classification of that space. In addition, the most restrictive provisions of Chapter 9 which apply to the nonseparated occupancies shall apply to the total nonseparated occupancy area. Where nonseparated occupancies occur in a high-rise building, the most restrictive requirements of Section 403 which apply to the nonseparated occupancies shall apply throughout the high-rise building.
508.3.2 Allowable building area and height.
The allowable building area and height of the building or portion thereof shall be based on the most restrictive allowances for the occupancy groups under consideration for the type of construction of the building
in accordance with Section 503.1.
508.3.3 Separation.
No separation is required between nonseparated occupancies.
Exceptions:
2. Separated tenancies in accordance with Section 510.10.</td></tr>
<tr><td>12</td><td>Table 602</td><td>TABLE 602 FIRE-RESISTANCE RATING REQUIREMENTS FOR EXTERIOR WALLS BASED ON FIRE SEPARATION DISTANCE [a], [c],[g],[h]
<table>
<tr><th>FIRE SEPARATION DISTANCE = X (feet)</th><th>TYPE OF CONSTRUCTION</th><th>OCCUPANCY GROUP M</th></tr>
<tr><td>X<5[e]</td><td>All</td><td>2</td></tr>
<tr><td rowspan="2">5>X<10</td><td>IA</td><td>2</td></tr>
<tr><td>Others</td><td>1</td></tr>
<tr><td>10>X<30</td><td>IA, IB</td><td>1</td></tr>
</table></td></tr>
</table>

	IIB, VB	0
	Others	1
X>30	All	0

a. Load-bearing exterior walls shall also comply with the fire-resistance rating requirements of Table 601.
b. For special requirements for Group U occupancies see Section 406.1.2
c. See Section 705.1.1 for party walls.
d. Open parking garages complying with Section 406 shall not be required to have a fire-resistance rating.
e. The fire-resistance rating of an exterior wall is determined based upon the fire separation distance of the exterior wall and the story in which the wall is located.

14 | 704 + 705

SECTION BC 704 EXTERIOR WALLS

704.1 General. Exterior walls shall be fire-resistance rated and have opening protection as required by this section. Exterior wall construction shall comply with the provisions of Chapter 14 and Appendix D where applicable.

704.2 Projections. Cornices, eave overhangs, exterior balconies and similar architectural appendages, including but not limited to, fascias, belt courses, pilasters, surrounds, gutters, leaders, half-timber work, shutters, trellises, which extend beyond the floor area shall conform to the requirements of this section and Section 1406, provided, if removed or destroyed, will not reduce the structural stability of the building enclosure, and installed so as not to reduce the required fire-resistance rating of the enclosure. Exterior egress balconies and exterior exit stairways shall comply with the requirements of this section and Sections 1013.5 and‡ 1022.1. Projections shall not extend beyond the distance determined by the following two methods, whichever results in the lesser projection:

1. A point one-third the distance to the lot line from an assumed vertical plane located where protected openings are required in accordance with Section 704.8.
2. More than 12 inches (305 mm) into areas where openings are prohibited.

704.2.1 Type III, IV or V construction. Projections from walls of Type III, IV or V construction shall be of any approved material.

704.2.2 Combustible projections. Combustible projections located where openings are not permitted or where protection of openings is required shall be of at least 1-hour fire-resistance-rated construction, Type IV construction, or as required by Section 1406.3.

704.3 Buildings on the same lot. For the purposes of determining the required wall and opening protection and roof-covering requirements, buildings on the same tax lot shall be assumed to have an imaginary line between them.

Exception: Two or more buildings on the same tax lot shall either be regulated as separate buildings or shall be considered as portions of one building if the aggregate area of such buildings is within the limits specified in Chapter 5 for a single building. Where the buildings contain different occupancy groups or are of different types of construction, the area shall be that allowed for the most restrictive occupancy or construction.

704.4 Materials. Exterior walls shall be of materials permitted by the building type of construction.

704.5 Fire-resistance ratings. Exterior walls shall be fire-resistance rated in accordance with Tables 601, 602, and Appendix D where applicable. The fire-resistance rating of exterior walls with a fire-separation distance of greater than 5 feet (1524 mm) shall be rated for exposure to fire from the inside. The

fire-resistance rating of exterior walls with a fire-separation distance of 5 feet (1524 mm) or less shall be rated for exposure to fire from both sides.

704.6 Structural stability. The wall shall extend to the height required by Section 704.11 and shall have sufficient structural stability such that it will remain in place for the duration of time indicated by the required fire-resistance rating.

704.7 Unexposed surface temperature. Where protected openings are not limited by Section 704.8, the limitation on the rise of temperature on the unexposed surface of exterior walls as required by ASTM E 119 shall not apply. Where protected openings are limited by Section 704.8, the limitation on the rise of temperature on the unexposed surface of exterior walls as required by ASTM E 119 shall not apply provided that a correction is made for radiation from the unexposed exterior wall surface in accordance with the following formula:

$A_e = A + (A_f \times F_\omega)$ **(Equation 7-1)**

where:

A_e = Equivalent area of protected openings.
A = Actual area of protected openings.
A_f = Area of exterior wall surface in the story under consideration exclusive of openings, on which the temperature limitations of ASTM E 119 for walls are exceeded.
F_ω = An "equivalent opening factor" derived from Figure 704.7 based on the average temperature of the unexposed wall surface and the fire-resistance rating of the wall.

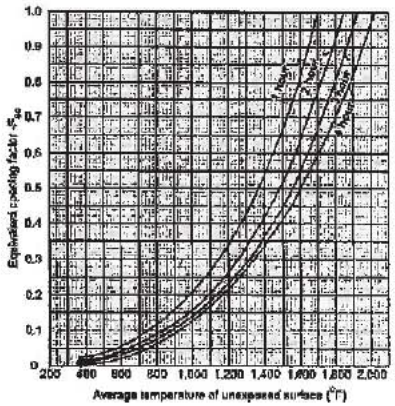

For SI: °C = [(°F) - 32] / 1.8.

FIGURE 704.7 EQUIVALENT OPENING FACTOR

704.8 Allowable area of openings. The maximum area of unprotected or protected openings permitted in an exterior wall in any story shall not exceed the values set forth in Table 704.8. Where both unprotected and protected openings are located in the exterior wall in any story, the total area of the openings shall comply with the following formula:

$$\frac{A}{a}+\frac{A_u}{a_u} \leq 1.0 \qquad \text{(Equation 7-2)}$$

where:

A = Actual area of protected openings, or the equivalent area of protected openings, A_e (see Section 704.7).
a = Allowable area of protected openings.
A_u = Actual area of unprotected openings.
a_u = Allowable area of unprotected openings.

TABLE 704.8 MAXIMUM AREA OF EXTERIOR WALL OPENINGS[a, i]

CLASSIFICATION OF OPENING	FIRE SEPARATION DISTANCE (feet)							
	0 to 3[c,h]	Greater than 3 and not more than 5[b]	Greater than 5 and not more than 10[d,f]	Greater than 10 and not more than 15[c,d,f]	Greater than 15 and not more than 20[c,f]	Greater than 20 and not more than 25[c, f]	Greater than 25 and not more than 30[c, f]	Greater than 30
Unprotected	Not Permitted[g]	Not Permitted[b, g, k]	10%	15%	25%	45%	70%	No Limit
Protected	Not Permitted[b, i]	15%[k]	25%[k]	45%[k]	75%[k]	No Limit[k]	No Limit[k]	No Limit

For SI: 1 foot = 304.8 mm.

a. Values given are percentage of the area of the exterior wall.
b. For occupancies in Group R-3, the maximum percentage of unprotected and protected exterior wall openings shall be 25 percent.

c. The area of openings in an open parking structure with a fire separation distance of greater than 10 feet shall not be limited.
d. For occupancies in Group H-2 or H-3, unprotected openings shall not be permitted for openings with a fire separation distance of 15 feet or less.
e. For requirements for fire walls for buildings with differing roof heights, see Section 705.6.1.
f. The area of unprotected and protected openings is not limited for occupancies in Group R-3, as applicable in Section 101.2, with a fire separation distance greater than 5 feet.
g. Buildings whose exterior bearing wall, exterior nonbearing wall and exterior structural frame are not required to be fire-resistance rated shall be permitted to have unlimited unprotected openings.
h. Includes accessory buildings to Group R-3.
i. Protected openings through a wall or walls between buildings shall comply with Section 705.8.
j. Protected openings within a fire separation distance of 3 feet or less are permitted for Occupancy Groups R-2 and R-3 provided such openings do not exceed 10 percent of the area of the façade of the story in which they are located. These openings shall not be credited towards meeting any mandatory natural light or ventilation requirements.
k. In Group R-2 and R-3 occupancies with an exterior separation distance greater than 3 feet, openings shall be in accordance with percentages indicated as "Protected Classification of Opening" in Table 704.8. However, such openings shall not be required to be protected.

l. Upon special application, the commissioner may permit exterior wall openings to be constructed in excess of the permitted area established by Table 704.8 if such openings at the time of their construction are located at least 60 feet in a direct line from any neighboring building, unless otherwise permitted by Section 704.3for buildings on the same lot. If any neighboring building is later altered or constructed to come within the above distance limitation, the affected exterior openings shall immediately be closed with construction meeting the fire-resistance-rating requirements for exterior wall construction of the building in which they are located. Such additional openings shall not be credited toward meeting any of the mandatory natural light or ventilation requirements unless they also comply with applicable provisions of Chapter 12 and the zoning resolution.

704.8.2 First story. In occupancies other than Group H, unlimited unprotected openings are permitted in the first story of exterior walls facing a street that have a fire separation distance of greater than 15 feet (4572 mm), or facing an unoccupied space. The unoccupied space shall be on the same lot or dedicated for public use, shall not be less than 30 feet (9144 mm) in width, and shall have access from a street by a posted fire lane in accordance with the *New York City Fire Code*.

704.9 Vertical separation of openings. Openings in exterior walls in adjacent stories shall be separated vertically to protect against fire spread on the exterior of the buildings where the openings are within 5 feet (1524 mm) of each other horizontally in accordance with Section 715.4.8. Such openings shall be separated vertically at least 3 feet (914 mm) by spandrel girders, exterior walls or other similar assemblies that have a fire-resistance rating of at least 1 hour or by flame barriers that extend horizontally at least 30 inches (762 mm) beyond the exterior wall and that are at least as wide as the opening. Flame barriers shall also have a fire-resistance rating of at least 1 hour. The unexposed surface temperature limitations specified in ASTM E 119 shall not apply to the flame barriers or vertical separation unless otherwise required by the provisions of this code. Where a curtain wall assembly is used on the exterior wall, the intersection between the floor assembly and curtain wall assembly shall be protected in accordance with Section 713.4.
Exceptions:

1. This section shall not apply to buildings that are three stories or less in height.
2. This section shall not apply to buildings equipped throughout with an automatic sprinkler system in accordance with Section 903.3.1.1 or 903.3.1.2.
3. This section shall not apply to open parking garages.
4. This section shall not apply to Occupancy Group A, E, I or R.

704.10 Vertical exposure. For buildings on the same tax lot, approved protectives shall be provided in every opening that is less than 15 feet (4572 mm) vertically above the roof of an adjoining building or adjacent structure that is within a horizontal fire-separation distance of 15 feet (4572 mm) of the wall in which the opening is located.

Exception: Opening protectives are not required where the roof construction has a fire-resistance rating of not less than 1 hour for a minimum distance of 10 feet (3048 mm) from the adjoining building and the entire length and span of the supporting elements for the fire-resistance-rated roof assembly has a fire-resistance rating of not less than 1 hour.

704.11 Parapets. Parapets shall be provided on exterior walls of buildings.

Exceptions: A parapet need not be provided on an exterior wall where any of the following conditions exist:

1. The wall is not required to be fire-resistance rated in accordance with Table 602 because of fire separation distance.
2. The building has an area of not more than 1,000 square feet (93 m²) on every floor.
3. Walls that terminate at roofs of not less than 2-hour fire-resistance-rated construction.
4. One-hour fire-resistance-rated exterior walls that terminate at the underside of the roof sheathing, deck or slab, provided that the entire building is covered with a Class A roof covering. Such roof shall not have openings located within 10 feet (3048 mm) of the 1-hour fire-resistance-rated exterior wall and not within 5 feet (1524 mm) for Groups R and U.

4.1. Where the roof/ceiling framing elements are parallel to the walls, such framing and elements supporting such framing shall not be of less than 1-hour fire-resistance-rated construction for a width of 4 feet (1219 mm) measured from the interior side of the wall for Groups R and U and 10 feet (3048 mm) for other occupancies; or

4.2. Where roof/ceiling framing elements are not parallel to the wall, the entire span of such framing and elements supporting such framing shall not be of less than 1-hour fire-resistance-rated construction.

5. In occupancies of Groups R-2 and R-3, both provided with a Class A or B roof covering, the exterior wall shall be permitted to terminate at the roof sheathing or deck in Type III, IV and V construction provided:

5.1. The roof sheathing or deck is constructed of approved noncombustible materials or of fire-retardant-treated wood, for a distance of 4 feet (1219 mm) from the perimeter; or

5.2. The roof is protected with 0.625-inch (15.88 mm) Type X gypsum board directly beneath the underside of the roof sheathing or deck, supported by a minimum of nominal 2-inch (51 mm) ledgers attached to the sides of the roof framing members, for a minimum distance of 4 feet (1219 mm).

6. Where the wall is permitted to have at least 25 percent of the exterior wall areas containing unprotected openings based on fire separation distance as determined in accordance with Section 704.8.

704.11.1 Parapet construction. Parapets shall have the same fire-resistance rating as that required for the supporting wall, and on any side adjacent to a roof surface, shall have noncombustible faces for the uppermost 18 inches (457 mm), including counterflashing and coping materials. The height of the parapet shall not be less than 30 inches (762 mm) above the point where the roof surface and the wall intersect. Where the roof slopes toward a parapet at a slope greater than two units vertical in 12 units horizontal (16.7-percent slope), the parapet shall extend to the same height as any portion of the roof within a fire separation distance where protection of wall openings is required, but in no case shall the height be less than 30 inches (762 mm).

704.12 Opening protection. Windows required to be protected in accordance with Section 704.8, 704.9, or 704.10 shall comply with Section

715.4.8. Other openings required to be protected with fire doors or shutters in accordance with Sections 704.8, 704.9 and 704.10 shall comply with Section 715.3.

Exception: Fire protective assemblies are not required where the building is protected throughout by an automatic sprinkler system and the exterior openings are protected by an approved water curtain using automatic sprinklers approved for that use. The sprinklers and the water curtain shall be installed in accordance with NFPA 13, as modified in Appendix Q.

704.12.1 Unprotected openings. Where protected openings are not required by Section 704, windows and doors shall be constructed of any approved materials. Glazing shall conform to the requirements of Chapters 24 and 26.

704.13 Joints. Joints made in or between exterior walls required by this section to have a fire-resistance rating shall comply with Section 713.

Exception: Joints in exterior walls that are permitted to have unprotected openings.

704.13.1 Voids. The void created at the intersection of a floor/ceiling assembly and an exterior curtain wall assembly shall be protected in accordance with Section 713.4.

704.14 Ducts and air transfer openings. Penetrations by air ducts and air transfer openings in fire-resistance-rated exterior walls required to have protected openings shall comply with Section 716.

Exception: Foundation vents installed in accordance with this code are permitted.

SECTION BC 705 FIRE WALLS

705.1 General. Each portion of a building separated by one or more fire walls that comply with the provisions of this section shall be considered a separate building. The extent and location of such fire walls shall provide a complete separation. Where a fire wall also separates groups that are required to be separated by a fire barrier wall, the most restrictive requirements of each separation shall apply. Concealed spaces in cornices and eaves shall comply with the provisions of Section 705.5.2.

705.1.1 Party walls. Any wall located on a property line between adjacent buildings, which is used or adapted for joint service between the two buildings, shall be constructed as a fire wall in accordance with Section 705, and shall create separate buildings.

705.1.2 Walls separating attached one- and two-family dwellings. Attached one- and two-family dwellings shall be separated by walls constructed in accordance with Section 705 or Appendix M.

705.2 Structural stability. Fire walls shall have sufficient structural stability under fire conditions to allow collapse of construction on either side without collapse of the wall for the duration of time indicated by the required fire-resistance rating.

705.3 Materials. Fire walls shall be constructed of any approved noncombustible materials.

705.4 Fire-resistance rating. Fire walls shall have a fire-resistance rating of not less than that required by Table 705.4.

TABLE 705.4 FIRE WALL FIRE-RESISTANCE RATINGS

GROUP	FIRE-RESISTANCE RATING (hours)
A, B, E, H-4, I, R-1, R-2, U	3[a]
F-1, H-3[b], H-5, M, S-1	3

H-1, H-2	4[b]
F-2, S-2, R-3, R-4	2

a. Walls shall be not less than 2-hour fire-resistance rated where separating buildings of Type II or V construction.
b. For Group H-1, H-2 or H-3 buildings, also see Sections 415.4 and 415.5.

705.5 Horizontal continuity. Fire walls shall be continuous from exterior wall to exterior wall and shall extend at least 18 inches (457 mm) beyond the exterior surface of exterior walls.

Exceptions:

1. Fire walls shall be permitted to terminate at the interior surface of combustible exterior sheathing or siding provided the exterior wall has a fire-resistance rating of at least 1 hour for a horizontal distance of at least 4 feet (1219 mm) on both sides of the fire wall. Openings within such exterior walls shall be protected by fire assemblies having a fire protection rating of not less than $^3/_4$ hour.
2. Fire walls shall be permitted to terminate at the interior surface of noncombustible exterior sheathing, exterior siding or other noncombustible exterior finishes provided the sheathing, siding, or other exterior noncombustible finish extends a horizontal distance of at least 4 feet (1219 mm) on both sides of the fire wall.
3. Fire walls shall be permitted to terminate at the interior surface of noncombustible exterior sheathing where the building on each side of the fire wall is protected by an automatic sprinkler system installed in accordance with Section 903.3.1.1 or 903.3.1.2.

705.5.1 Exterior walls. Where the fire wall intersects the exterior walls, the fire-resistance rating for the exterior walls on both sides of the fire wall shall have a 1-hour fire-resistance rating with $^3/_4$-hour opening protection where opening protection is required. The fire-resistance rating of the exterior wall shall extend a minimum of 4 feet (1219 mm) on each side of the intersection of the fire wall to exterior wall. Exterior wall intersections at fire walls that form an angle equal to or greater than 180 degrees (3.14 rad) do not need exterior wall protection.

705.5.2 Horizontal projecting elements. Fire walls shall extend to the outer edge of horizontal projecting elements such as balconies, roof overhangs, canopies, marquees and architectural projections that are within 4 feet (1219 mm) of the fire wall.

Exceptions:

1. Noncombustible horizontal projecting elements without concealed spaces provided the exterior wall behind and below the projecting element has not less than 1-hour fire-resistance-rated construction for a distance not less than the depth of the projecting element on both sides of the fire wall. Openings within such exterior walls shall be protected by fire assemblies having a fire protection rating of not less than $^3/_4$ hour.
2. Noncombustible horizontal projecting elements with concealed spaces, provided a minimum 1-hour fire-resistance-rated wall extends through the concealed space. The projecting element shall be separated from the building by a minimum of 1-hour fire-resistance-rated construction for a distance on each side of the firewall equal to the depth of the projecting element. The wall is not required to extend under the projecting element where the building exterior wall is a minimum of 1-hour fire-resistance rated for a distance on each side of the firewall equal to the depth of the projecting element. Openings within such exterior walls shall be protected by fire assemblies having a fire protection rating of not less than $^3/_4$ hour.

705.6 Vertical continuity. Fire walls shall extend from the foundation through the roof, to form a parapet at least 30 inches (762 mm) in height. Such parapet shall in no event extend to a point less than 4 inches (102 mm) above the highest point of peaked or gabled roof.

Exceptions:

1. Where a 2-hour fire wall is permitted in accordance with Table 705.4, such wall shall be permitted to terminate at the underside of the roof sheathing, deck or slab provided:
1.1. The lower roof assembly within 4 feet (1219 mm) of the wall has not less than a 1-hour fire-resistance rating and the entire length and span

		of supporting elements for the rated roof assembly has a fire-resistance rating of not less than 1 hour; and 1.2. Openings in the roof shall not be located within 4 feet (1219 mm) of the fire wall; and 1.3. Each building shall be provided with not less than a Class A roof covering. 2. In buildings of Type I or II construction, fire walls shall be permitted to terminate at the underside of noncombustible roof sheathing, deck, or slabs where both buildings are provided with not less than a Class A roof covering. Openings in the roof shall not be located within 4 feet (1219 mm) of the fire wall. 3. In buildings of Type III, IV and V construction, fire walls shall be permitted to terminate at the underside of noncombustible roof sheathing or decks provided: 3.1. There are no openings in the roof within 4 feet (1219 mm) of the fire wall; and 3.2. The roof is covered with a minimum Class A roof covering. 4. Buildings located above a parking garage designed in accordance with Section 509.2 shall be permitted to have the fire walls for the buildings located above the parking garage extend from the horizontal separation between the parking garage and the buildings. **705.7 Combustible framing in fire walls.** Adjacent combustible members entering into a concrete or masonry firewall from opposite sides shall not have less than a 4-inch (102 mm) distance between embedded ends. Where combustible members frame into hollow walls or walls of hollow units, hollow spaces shall be solidly filled for the full thickness of the wall and for a distance not less than 4 inches (102 mm) above, below and between the structural members, with noncombustible materials approved for fireblocking. **705.8 Openings.** Each opening through a fire wall, a party wall, or a through wall between two buildings shall be protected in accordance with Section 715.3 and shall not exceed 120 square feet (11 m^2), with no dimension greater than 12 feet (3658 mm). The aggregate width of openings at any floor level shall not exceed 25 percent of the length of the wall. **Exception:** Openings shall not be limited to 120 square feet (11 m^2) where both buildings are equipped throughout with an automatic sprinkler system installed in accordance with Section 903.3.1.1. However, the aggregate width of all openings at any one floor level shall not exceed 25 percent of the length of the wall. **705.9 Penetrations.** Penetrations through fire walls shall comply with Section 712. **705.10 Joints.** Joints made in or between fire walls shall comply with Section 713. **705.11 Ducts and air transfer openings.** Ducts and air transfer openings shall not penetrate fire walls. **Exception:** Penetrations by ducts and air transfer openings of fire walls that are not on a tax lot line shall be allowed provided the penetrations comply with Sections 712 and 716. The size and aggregate width of all openings shall not exceed the limitations of Section 705.8.
22	907	**SECTION BC 907 FIRE ALARM AND DETECTION SYSTEMS** **907.1 General.** This section covers the application, installation, performance and maintenance of fire alarm systems and their components. Systems shall be designed and installed in accordance with NFPA 72 as modified in Appendix Q and the *New York City Electrical Code.* **907.1.1 Construction documents.** Construction documents for fire alarm systems shall be submitted for review and approval to the department and the Fire Department prior to system installation. Construction documents shall include, but not be limited to, all of the following: 1. A floor plan that indicates the use of all rooms. 2. Locations of alarm-initiating and notification appliances. 3. Alarm control and trouble signaling equipment.

		4. Annunciation. 5. Power connection. 6. Fire alarm riser diagram and all fire alarm devices indicated on the floor plans. Quantities of devices on the floor plans shall match the quantities indicated on the riser diagram. 7. Copies of any variances granted by the department or the Fire Department. 8. Legend of all fire alarm symbols and abbreviations used. 9. Design criteria for fire alarm audibility in various occupancies indicated on plans. 10. Fire alarm sequence of operation for the fire alarm control panel and the central station transmitter. 11. The interface of fire safety control functions. **907.1.2 Equipment.** Systems and their components shall be listed for the purpose for which they are installed. **907.2 Where required.** An approved manual, automatic or manual and automatic fire alarm system shall be provided in accordance with Sections 907.2.1 through 907.2.21. Where automatic sprinkler protection, installed in accordance with Section 903.3.1.1 or 903.3.1.2, is provided and connected to the building fire alarm system, automatic heat detection required by this section shall not be required. An approved automatic fire detection system shall be installed in accordance with the provisions of this code, the *New York City Mechanical Code*, and NFPA 72. Devices, combinations of devices, appliances and equipment shall comply with Section 907.1.2. The automatic fire detectors shall be smoke detectors, except that an approved alternative type of detector shall be installed in spaces such as boiler rooms where, during normal operation, products of combustion are present in sufficient quantity to actuate a smoke detector. All initiating devices related to fire or life safety, other than smoke alarms, shall be connected to the fire alarm system. In all occupancies where an automatic fire alarm system is required by this section, selective coverage smoke detectors shall be located as follows, unless partial or total coverage automatic detection is specified. 1. In each mechanical equipment, electrical, transformer, telephone equipment or similar room, in elevator machine rooms, and in elevator lobbies. 2. In air distribution systems in accordance with Section 606 of the *New York City Mechanical Code*. **907.2.2 Group B.** A manual and automatic fire alarm system shall be installed in Group B occupancies having an occupant load of 500 or more persons or more than 100 persons above or below the lowest level of exit discharge. Where such occupancies are not protected by an automatic sprinkler system, a manual fire alarm and partial coverage automatic smoke detection or automatic heat detection system shall be installed in accordance with NFPA 72. **907.2.7 Group M.** A manual and automatic fire alarm system shall be installed in Group M occupancies where any one of the following conditions exists: 1. Where a Group M fire area exceeds 12,000 square feet (1115 m²); 2. Where a Group M fire area is located more than three stories above grade; 3. Where the combined area of all Group M fire areas on all floors, including mezzanines, exceeds 24,000 square feet (2230 m²); or 4. Where a Group M fire area in a below-grade story exceeds 1,500 square feet (139 m²). Where such occupancies are not protected by an automatic sprinkler system, a manual fire alarm and partial coverage automatic smoke detection or automatic heat detection system shall be installed in accordance with NFPA 72. **907.2.15 Delayed egress locks.** Where delayed egress locks are installed on means of egress doors in accordance with Section 1008.1.8.6, an automatic smoke or heat detection system shall be installed as required by that section. **907.2.18 Underground buildings with smoke exhaust system.** Where a smoke exhaust system is installed in an underground building as required by Section 405, automatic fire detectors shall be provided in accordance with this section. **907.2.18.1 Smoke detectors.** A minimum of one smoke detector listed for the intended purpose shall be installed in the following areas:

1. Mechanical equipment, electrical, transformer, telephone equipment, elevator machine or similar rooms.
2. Elevator lobbies.
3. The main supply and return and exhaust air plenum of each air-conditioning system serving more than one story and located in a serviceable area downstream from filters on supply ducts and in return/exhaust ducts downstream of the last duct inlet.
4. Each connection to a vertical duct or riser serving two or more floors from return air ducts or plenums of heating, ventilating and air-conditioning systems, except that in Group R occupancies, a listed smoke detector is allowed to be used in each return air riser carrying not more than 5,000 cfm (2.4 m^3/s) and serving not more than 10 air inlet openings.

907.2.18.2 Alarm required. Activation of the smoke exhaust system shall activate an audible alarm at a constantly attended location.

907.2.19 Underground buildings. In underground buildings complying with Section 405 where the lowest level of a structure is more than 30 feet (18 144 mm) below the lowest level of exit discharge, the structure shall be equipped throughout with a manual and automatic fire alarm system, including an emergency voice/alarm communication system installed in accordance with Section 907.2.12.2.

907.2.19.1 Public address system. In underground buildings complying with Section 405 where a fire alarm system is not required by Section 907.2, a public address system shall be provided that shall be capable of transmitting voice communications to the highest level of exit discharge serving the underground portions of the structure and all levels below.

907.2.20 Covered mall buildings. Covered mall buildings exceeding 50,000 square feet (4645 m^2) in total floor area shall be provided with an emergency voice/alarm communication system. An emergency voice/alarm communication system serving a mall, required or otherwise, shall be accessible to the Fire Department. The system shall be provided in accordance with Section 907.2.12.2.

907.3 Manual fire alarm boxes. Manual fire alarm boxes shall be installed in accordance with Sections 907.3.1 through 907.3.5.

907.3.1 Location. Manual fire alarm boxes shall be located not more than 5 feet (1524 mm) from the entrance to each exit. Additional manual fire alarm boxes shall be located so that travel distance to the nearest box does not exceed 200 feet (60 960 mm).

907.3.2 Height. The height of the manual fire alarm boxes shall be a minimum of 42 inches (1067 mm) and a maximum of 48 inches (1219 mm), measured vertically, from the floor level to the activating handle or lever of the box.

907.3.3 Color. Manual fire alarm boxes shall be red in color.

907.3.4 Signs. Where fire alarm systems are not monitored by a supervising station, an approved permanent sign that reads: WHEN ALARM SOUNDS-CALL FIRE DEPARTMENT shall be installed adjacent to each manual fire alarm box.

Exception: Where the manufacturer has permanently provided this information on the manual fire alarm box.

907.3.5 Protective covers. The Fire Department is authorized to require the installation of listed manual fire alarm box protective covers to prevent malicious false alarms or provide the manual fire alarm box with protection from physical damage. The protective cover shall be transparent or red in color with a transparent face to permit visibility of the manual fire alarm box. Each cover shall include proper operating instructions. A protective cover that emits a local alarm signal shall not be installed unless approved.

907.4 Power supply. The primary and secondary power supplies for the fire alarm system shall be provided in accordance with NFPA 72.

907.5 Wiring. Wiring shall comply with the requirements of the *New York City Electrical Code* and NFPA 72. Wireless protection systems utilizing radio-frequency transmitting devices shall comply with the special requirements for supervision of low-power wireless systems in NFPA 72.

907.6 Activation. Where an alarm notification system is required by another section of this code, it shall be activated by:

1. A required automatic fire alarm system.
2. Sprinkler water-flow devices.
3. Required manual fire alarm boxes.
4. Other required types of automatic fire detection devices or suppression systems.

907.7 Presignal system. Presignal systems shall not be installed unless approved by the Fire Department. Where a presignal system is installed, 24-hour personnel supervision shall be provided at a location approved by the Fire Department. Where a connection to a supervising station is required, the

transmission of the alarm signal to the supervising station shall activate upon the initial alarm signal.

907.8 Zones. Each floor shall be zoned separately and a zone shall not exceed 22,500 square feet (2090 m²). The length of any zone shall not exceed 300 feet (91 440 mm) in any direction.

Exception: Automatic sprinkler system zones shall not exceed the area permitted by NFPA 13.

907.8.1 Zoning indicator panel. A zoning indicator panel and the associated controls shall be provided at the main building entrance accessible to responding Fire Department personnel and in other locations approved by the department and the Fire Department. The visual zone indication shall lock in until the system is reset and shall not be canceled by the operation of an audible alarm-silencing switch.

907.9 Alarm notification appliances. Alarm notification appliances listed for their purpose shall be provided.

907.9.1 Visible alarms. Visible alarm notification appliances shall be provided in accordance with Sections 907.9.1.1 through 907.9.1.3.

Exception: Visible alarm notification appliances shall not be required in exits.

907.9.1.1 Public and common areas. Visible alarm notification appliances shall be provided in public areas and common areas.

907.9.1.2 Employee work areas. Where employee work areas have audible alarm coverage, the wiring systems shall be designed so that visible alarm notification appliances can be integrated into the alarm system.

TABLE 907.9.1.3 VISIBLE AND AUDIBLE ALARMS [F]

NUMBER OFDWELLING UNITS	DWELLING UNITS WITH VISIBLE AND AUDIBLE ALARMS
6 to 25	2
26 to 50	4
51 to 75	7
76 to 100	9
101 to 150	12
151 to 200	14
201 to 300	17
301 to 400	20
401 to 500	22

501 to 1,000	5% of total
1,001 and over	50 plus 3 for each 100 over 1,000

907.9.2 Audible alarms. Audible alarm notification appliances shall be provided and shall sound a distinctive sound that is not to be used for any purpose other than that of a fire alarm. The audible alarm notification appliances shall provide a sound pressure level of 15 decibels (dBA) above the average ambient sound level or 5 dBA above the maximum sound level having a duration of at least 60 seconds, whichever is greater, in every occupied space within the building. The minimum sound pressure levels shall be: 70 dBA in occupancies in Groups R and I-1; 90 dBA in mechanical equipment rooms and 60 dBA in other occupancies. The maximum sound pressure level for audible alarm notification appliances shall be 120 dBA at the minimum hearing distance from the audible appliance. Where the average ambient noise is greater than 105 dBA, visible alarm notification appliances shall be provided in accordance with NFPA72 and audible alarm notification appliances shall not be required to provide a maximum sound pressure level above 120 dBA.

Exception: Visible alarm notification appliances shall be allowed in lieu of audible alarm notification appliances in critical-care areas of Group I-2 occupancies.

907.10 Fire safety functions. Where a fire alarm system is required by Section 907.2, automatic fire detectors utilized for the purpose of performing fire safety functions shall be connected to the building's fire alarm control panel. Detectors shall, upon actuation, perform the intended function and activate the alarm notification appliances or a visible and audible supervisory signal at a constantly attended location. In buildings not required to be equipped with a fire alarm system, the automatic fire detector shall be powered by normal electrical service and, upon actuation, perform the intended function. The detectors shall be located in accordance with NFPA 72.

907.11 Duct smoke detectors. Where a fire alarm system is provided, duct smoke detectors shall be connected to the building's fire alarm control panel. Activation of a duct smoke detector shall initiate a visible and audible supervisory signal at a constantly attended location. Duct smoke detectors shall not be used as a substitute for required open-area detection.

Exceptions:

1. The supervisory signal at a constantly attended location is not required where duct smoke detectors activate the building's alarm notification appliances.
2. In occupancies not required to be equipped with a fire alarm system, actuation of a smoke detector shall activate a visible and audible signal in an approved location. Smoke detector trouble conditions shall activate a visible or audible signal in an approved location and shall be identified as air duct detector trouble.

907.12 Access. Access shall be provided to each detector for periodic inspection, maintenance and testing.

907.13 Fire-extinguishing systems. Where a fire alarm system is required by another section of this code or is otherwise installed, automatic fire-extinguishing systems shall be connected to the building fire alarm system.

907.14 Monitoring. Where required by this chapter or the *New York City Fire Code*, an approved supervising station in accordance with NFPA 72 shall monitor fire alarm systems.

Exception: Supervisory service is not required for:

1. Single- and multiple-station smoke alarms required by Section 907.2.10.
2. Smoke detectors in Group I-3 occupancies.
3. Automatic sprinkler systems in one- and two-family dwellings.

PASSERO ASSOCIATES
engineering architecture

		907.15 Automatic telephone-dialing devices. Automatic telephone-dialing devices used to transmit an emergency alarm shall not be connected to any Fire Department telephone number unless approved by the Fire Commissioner. **907.16 Acceptance tests.** Upon completion of the installation of the fire alarm system, alarm notification appliances and circuits, alarm-initiating devices and circuits, supervisory-signal initiating devices and circuits, signaling line circuits, and primary and secondary power supplies shall be tested in accordance with NFPA 72. **907.17 Record of completion.** A record of completion in accordance with NFPA 72 verifying that the system has been installed in accordance with the approved construction documents and specifications shall be provided. **907.18 Instructions.** Operating, testing and maintenance instructions, and record drawings ("as builts") and equipment specifications shall be provided at an approved location. **907.19 Inspection, testing and maintenance.** The maintenance and testing schedules and procedures for fire alarm and fire detection systems shall be in accordance with the *New York City Fire Code.*
24	912	**SECTION BC 912 FIRE DEPARTMENT CONNECTIONS** **912.1 Installation.** Fire Department connections shall be installed in accordance with the NFPA standard applicable to the system design and shall comply with Sections 912.2 through 912.5. **912.2 Location.** With respect to hydrants, driveways, buildings and landscaping, Fire Department connections shall be so located that fire apparatus and hose connected to supply the system will not obstruct access to the buildings for other fire apparatus. 912.2.1 Fire Department connections. The location of Fire Department connections shall be as follows: **912.2.1.1** One Fire Department connection shall be provided for each 300 feet (91 140 mm) of exterior building wall or fraction thereof facing upon each street or public space. **912.2.1.2** Where buildings face upon two parallel streets or public spaces without an intersecting street or public space, one connection shall be provided for each 300 feet (91 140 mm) of exterior building wall or fraction thereof facing upon each such parallel street or public space. **912.2.1.3** Where a building faces upon two intersecting streets or public spaces and the total length of the exterior building walls facing upon such streets or public spaces does not exceed 300 feet (91 140 mm) only one Fire Department connection need be installed provided the Fire Department connection is located within 15 feet (4572 mm) of the corner and on the street with the longest building frontage. **912.2.1.4** Where a building faces on three streets or public spaces, one Fire Department connection shall be provided for each 300 feet (91 140 mm) of building wall or fraction thereof facing upon such streets or public spaces provided that at least one Fire Department connection is installed on each of the parallel streets or public spaces, and further provided that the Fire Department connections shall be located so that the distance between them does not exceed 300 feet (91 140 mm). **912.2.1.5** Where a building faces upon four streets or public spaces, at least one Fire Department connection shall be provided on each street front or public space; however, only one Fire Department connection need be provided at the corner of two intersecting streets or public spaces if the Fire Department connection is located within 15 feet (4572 mm) of the corner and on the street with the longest building frontage or public space, and if the distances between Fire Department connections, in all cases, do not exceed 300 feet (91 140 mm). **912.2.1.6** In any case where the exterior building walls of a building facing a street or public space are obstructed in part by another building, one Fire Department connection shall be provided for each clear 300feet (91 140 mm) of exterior building wall or fraction thereof facing upon such street or public space. **912.2.2** Existing buildings. On existing buildings, wherever the Fire Department connection is not visible to approaching fire apparatus, the Fire Department connection shall be indicated by an approved sign mounted onthe street front or on the side of the building. Such sign shall have the letters –"FDC"at least 6 inches (152 mm) high and words in letters at least 2 inches (51 mm) high or an arrow to indicate the location. All such signs shall be

PASSERO ASSOCIATES
engineering architecture

		subject to the approval of the Fire Department. **912.3 Access.** Immediate access to Fire Department connections shall be maintained at all times and without obstruction by fences, bushes, trees, walls or any other object. A working space of not less than 36 inches (762 mm) in width, 36 inches (914 mm) in depth and 78 inches (1981 mm) in height shall be provided and maintained in front of and to the sides of wall-mounted Fire Department connections and around the circumference of free-standing Fire Department connections, exceptas otherwise required or approved. Exception: Fences, where provided with an access gate and a means of emergency operation that shall be maintained operational at all times in accordance with the New York City Fire Code. **912.4 Signs.** Fire Department connections shall be provided with signage in accordance with Section 912 of the New York City Fire Code. **912.5 Backflow protection.** The potable water supply to automatic sprinkler and standpipe systems shall be protected against backflow as required by the New York City Plumbing Code.
25	1001.1 &2	**1001.1 General.** Buildings or portions thereof shall be provided with a means of egress system as required by this chapter. The provisions of this chapter shall control the design, construction and arrangement of means of egress components required to provide an approved means of egress from structures and portions thereof. **1001.2 Minimum requirements.** It shall be unlawful to alter a building or structure in a manner that will reduce the number of exits or the capacity of the means of egress to less than required by this code.
26	1004 & Table 1004.1.1	**SECTION 1004 OCCUPANT LOAD** **1004.1 Design occupant load.** In determining means of egress requirements, the number of occupants for whom means of egress facilities shall be provided shall be determined in accordance with this section. Where occupants from accessory areas egress through a primary space, the calculated occupant load for the primary space shall include the total occupant load of the primary space plus the number of occupants egressing through it from the accessory area. **1004.1.1 Areas without fixed seating.** The number of occupants shall be computed at the rate of one occupant per unit of area as prescribed in Table 1004.1.1. For areas without fixed seating, the occupant load shall not be less than that number determined by dividing the floor area under consideration by the occupant per unit of area factor assigned to the occupancy as set forth in Table 1004.1.1. Where an intended use is not listed in Table 1004.1.1, the code enforcement official shall establish a use based on a listed use that most nearly resembles the intended use. **TABLE 1004.1.1 MAXIMUM FLOOR AREA ALLOWANCES PER OCCUPANT**

FUNCTION OF SPACE	FLOOR AREA IN SQ. FT. PER OCCUPANT
Accessory storage areas, mechanical equipment room	300 gross
Assembly without fixed seats	
Concentrated (chairs only—not fixed)	7 net
Standing space	5 net
Unconcentrated (tables and chairs)	15 net
Business areas	100 gross
Locker rooms	50 gross
Mercantile	

PASSERO ASSOCIATES
engineering architecture

		Areas on other floors: 60 gross Basement and grade floor areas: 30 gross Storage, stock, shipping areas: 300 gross **1004.2 Increased occupant load.** The occupant load permitted in any building, or portion thereof, is permitted to be increased from that number established for the occupancies in Table 1004.1.1, provided that all other requirements of the code are also met based on such modified number and the occupant load does not exceed one occupant per 7 square feet (0.65 m²) of occupiable floor space. Where required by the code enforcement official, an approved aisle, seating or fixed equipment diagram substantiating any increase in occupant load shall be submitted. Where required by the code enforcement official, such diagram shall be posted. **1004.3 Posting of occupant load.** Every room or space that is an assembly occupancy shall have the occupant load of the room or space posted in a conspicuous place, near the main exit or exit access doorway from the room or space. Posted signs shall be of an approved legible permanent design and shall be maintained by the owner or authorized agent. Such sign shall also comply with Section 1028.1.2.
28	1007.1	**SECTION BC 1007 ACCESSIBLE MEANS OF EGRESS** **1007.1 Accessible means of egress required.** Accessible means of egress shall comply with this section. Accessible spaces shall be provided with not less than one accessible means of egress. Where more than one means of egress is required by Section 1014.1 or 1018.1 from any accessible space, at least two accessible means of egress shall be provided to each accessible portion of the space. **Exceptions:** 1. Accessible means of egress are not required in alterations to existing buildings where the level of alterations does not trigger full compliance of accessibility pursuant to Section 28-101.4 of the *Administrative Code*.‡ 2. One accessible means of egress is required from an accessible mezzanine level in accordance with Section 1007.3 or 1007.4.
29	1008	**SECTION BC 1008 DOORS, GATES AND TURNSTILES** **1008.1 Doors.** Means of egress doors shall meet the requirements of this section. Doors serving a means of egress system shall meet the requirements of this section and Section 1017.2. Doors provided for egress purposes in numbers greater than required by this code shall meet the requirements of this section. Means of egress doors shall be readily distinguishable from the adjacent construction and finishes such that the doors are easily recognizable as doors. Mirrors or similar reflecting materials shall not be used on means of egress doors. Means of egress doors shall not be concealed by curtains, drapes, decorations or similar materials. **1008.1.1 Size of doors.** The minimum width and height of each door opening shall be in accordance with this section. **1008.1.1.1 Door width.** The minimum width of each door opening shall be sufficient for the occupant load thereof and shall provide a clear width of not less than 32 inches (813 mm). Clear openings of doorways with swinging doors shall be measured between the face of the door and the stop, with the door open 90 degrees (1.57 rad). Where this section requires a minimum clear width of 32 inches (813 mm) and a door opening includes two door leaves without a mullion, one leaf shall provide a clear opening width of 32 inches (813 mm). The maximum width of a swinging door leaf shall be 48 inches (1219 mm) nominal. **1008.1.1.2 Projections into clear width.** There shall not be projections into the required clear width lower than 34 inches (864 mm) above the floor or ground. Projections into the clear opening width between 34 inches (864 mm) and 80 inches (2032 mm) above the floor or ground shall not exceed 4 inches (102 mm).

PASSERO ASSOCIATES
engineering architecture

		1008.1.1.3 Height. The height of doors shall not be less than 80 inches (2032 mm). **1008.1.2 Door swing.** Egress doors shall be installed in accordance with this section. **1008.1.2.1 Mounting.** Egress doors shall be side-hinged swinging. **Exceptions:** 1. Private garages, office areas, factory and storage areas with an occupant load of 10 or less. 2. Group I-3 occupancies used as a place of detention. 3. Doors within or serving a single dwelling unit in Groups R-2 and R-3. 4. In other than Group H occupancies, revolving doors complying with Section 1008.1.3.1. 5. In other than Group H occupancies, horizontal sliding doors complying with Section 1008.1.3.3 are permitted in a means of egress. 6. Power-operated doors in accordance with Section 1008.1.3.2. **1008.1.2.2 Direction of swing.** Doors shall swing in the direction of egress travel where serving: 1. Group F or H occupancies. 2. Rooms or spaces with an occupant load of 50 or more persons. 3. Rooms or spaces requiring more than one exit door. 4. Automatic teller machines in accordance with Section 10-160 of the *Administrative Code*. **1008.1.2.3 Opening force.** The opening force for interior side-swinging doors without closers shall not exceed a 5-pound (22 N) force. For other side-swinging, sliding and folding doors, the door latch shall release when subjected to a 15-pound (67 N) force. The door shall be set in motion when subjected to a 30-pound (133 N) force. The door shall swing to a full-open position when subjected to a 15-pound (67 N) force. Forces shall be applied to the latch side. **1008.1.3 Special doors.** Special doors and security grilles shall comply with the requirements of Sections 1008.1.3.1 through 1008.1.3.5. **1008.1.3.2 Power-operated doors.** Where means of egress doors are operated by power, such as doors with a photoelectric-actuated mechanism to open the door upon the approach of a person, or doors with power-assisted manual operation, the design shall be such that in the event of power failure, the door is capable of being opened manually to permit means of egress travel or closed where necessary to safeguard means of egress. The forces required to open these doors manually shall not exceed those specified in Section 1008.1.2, except that the force to set the door in motion shall not exceed 50 pounds (220 N). The door shall be capable of swinging from any position to the full width of the opening in which such door is installed when a force is applied to the door on the side from which egress is made. Full-power-operated doors shall comply with BHMA A156.10. Power-assisted and low-energy doors shall comply with BHMA A156.19. **Exceptions:** 1. Power operated doors are not required to be manually operable in occupancies in Group I-3 when egress complies with Section 408. 2. Section 1008.1.3.2 does not apply to horizontal sliding doors complying with Section 1008.1.3.3. 3. For a biparting door in the emergency breakout mode, a door leaf located within a multiple-leaf opening shall be exempt from the minimum 32-inch (813 mm) single-leaf requirement of Section 1008.1.1, provided a minimum 32-inch (813 mm) clear opening is provided when the two biparting leaves meeting in the center are broken out. **1008.1.3.4 Access-controlled entrance doors.** The exterior building entrance doors serving occupancies in Group A, B, E, M, R-1 or R-2 and entrance doors to tenant spaces in occupancies in Groups A, B, E, M, R-1 and R-2 are permitted to be equipped with an approved entrance and egress access control system which shall be installed in accordance with all of the following criteria: 1. A sensor shall be provided on the egress side arranged to detect an occupant approaching the doors. The doors shall be arranged to unlock by a signal from or loss of power to the sensor. 2. Loss of power to that part of the access control system which locks the doors shall automatically unlock the doors. 3. The doors shall be arranged to unlock from a manual unlocking device located 40 inches to 48 inches (1016 mm to 1219 mm) vertically above the floor and within 5 feet (1524 mm) of the secured doors. Ready access shall be provided to the manual unlocking device and the device shall be clearly identified by a sign that reads "PUSH TO EXIT." When operated, the manual unlocking device shall result in direct interruption of

PASSERO ASSOCIATES
engineering architecture

power to the lock—independent of the access control system electronics—and the doors shall remain unlocked for a minimum of 30 seconds.
4. Activation of the building fire alarm system, if provided, shall automatically unlock the doors, and the doors shall remain unlocked until the fire alarm system has been reset.
5. Activation of the building automatic sprinkler or fire detection system, if provided, shall automatically unlock the doors. The doors shall remain unlocked until the fire alarm system has been reset.
6. Entrance doors in buildings with an occupancy in Group A, B, E or M shall not be secured from the egress side during periods that the building is open to the general public.

1008.1.3.5 Security grilles. In Groups B, M and S, horizontal sliding or vertical security grilles are permitted at the main entrance where the opening of such grilles are essential to the operation of the establishments. Such grilles shall beinstalled in accordance with the following criteria:
1. Security grilles shall be openable from the inside without the use of a key or special knowledge or effort during periods that the space is occupied.
2. The security grilles shall remain secured in the full-open position during the period of occupancy by the general public.
3. Except as to buildings or structures classified in occupancy Group S, buildings or structures that have been designated as a landmark by the landmarks preservation commission or located in a historic district designated by such commission, on or after July 1, 2011, no security grille may be installed or replaced, nor shall the owner of a structure classified as a Group B or M occupancy or the operator of the business occupying such structure allow to be installed or replaced, a security grille to secure such property where the grille abuts the sidewalk, unless the grille, when closed, permits visibility from the sidewalk of at least 70 percent of the area covered by such grille.
4. No later than July 1, 2026, all security grilles installed on buildings or structures classified in occupancy Groups B or M shall comply with the provisions of paragraph 3 of this section.

1008.1.4 Floor elevation. There shall be a floor or landing on each side of a door. Such floor or landing shall be at the same elevation on each side of the door. Landings shall be level except for exterior landings, which are permitted to have a slope not to exceed 0.25 unit vertical in 12 units horizontal (2-percent slope).

Exceptions:
1. Doors serving individual dwelling units in Groups R-2 and R-3 where the following apply:
1.1. A door is permitted to open at the top step of an interior flight of stairs within the dwelling unit, provided the door does not swing over the top step.
1.2. Screen doors and storm doors are permitted to swing over stairs or landings.
2. Landings serving exterior doors as provided for in Section 1003.5, Exception 1, and Section 1017.2, which are not on an accessible route may be constructed a single 7-inch (178 mm) step below the elevation at the door threshold.

1008.1.5 Landings at doors. Landings shall have a width not less than the width of the stairway or the door, whichever is the greater. Doors in the fully open position shall not reduce a required dimension by more than 7 inches (178 mm). When a landing serves an occupant load of 50 or more, doors in any position shall not reduce the landing to less than 75 percent of its required width. Landings shall have a length measured in the direction of travel of not less than 44 inches (1118 mm).

1008.1.6 Thresholds. Thresholds at doorways shall not exceed 0.75 inch (19.1 mm) in height for sliding doors serving dwelling units or 0.5 inch (12.7 mm) for other doors. Raised thresholds and floor level changes greater than 0.25 inch (6.4 mm) at doorways shall be beveled with a slope not greater than one unit vertical in two units horizontal (50-percent slope).

1008.1.7 Door arrangement. Space between two doors in series shall be 48 inches (1219 mm) minimum plus the width of a door swinging into the space. Doors in series shall swing either in the same direction or away from the space between doors.

1008.1.8 Door operations. Except as specifically permitted by this section egress doors shall be readily openable from the egress side without the use of a key or special knowledge or effort.

1008.1.8.1 Hardware. Door handles, pulls, latches, locks and other operating devices on doors required to be accessible by Chapter 11 shall not require tight grasping, tight pinching or twisting of the wrist to operate.

PASSERO ASSOCIATES
engineering architecture

		1008.1.8.2 Hardware height. Door handles, pulls, latches, locks and other operating devices shall be installed 34 inches (864 mm) minimum and 48 inches (1219 mm) maximum above the finished floor. Locks used only for security purposes and not used for normal operation are permitted at any height. **1008.1.8.3 Locks and latches.** Locks and latches shall be permitted to prevent operation of doors where any of the following exists: 1. Places of detention or restraint. 2. Places where extra safeguards are required such as banks, museums, and jewelry stores subject to the approval of the commissioner and provided the locks are equipped with electrical release devices for remote control in case of emergencies. However, museums shall be subject to further special review by the commissioner and Fire Commissioner. 3. Main entrances in Occupancy Groups B, M, and S as permitted by Section 1008.1.3.5. 4. Doors from individual dwelling or sleeping units of Group R occupancies having an occupant load of 10 or less are permitted to be equipped with a night latch, dead bolt or security chain, provided such devices are openable from the inside without the use of a key or tool. 5. Stairways leading from the top floor to a roof may be provided with locked wire mesh gates openable by key in Occupancy Group E. The use of a hook and eye closing device on the inside of all doors to roofs shall be permitted. **1008.1.8.4 Bolt locks.** Manually operated flush bolts or surface bolts are not permitted. **Exceptions:** 1. On doors not required for egress in individual dwelling units or sleeping units. 2. Where a pair of doors serves a storage or equipment room, manually operated edge- or surface-mounted bolts are permitted on the inactive leaf. **1008.1.8.5 Unlatching.** The unlatching of any leaf shall not require more than one operation. **Exception:** More than one operation is permitted for unlatching doors in the following locations: 1. Places of detention or restraint. 2. Where manually operated bolt locks are permitted by Section 1008.1.8.4. 3. Doors from individual dwelling units and guestrooms of Group R occupancies as permitted by Section 1008.1.8.3, Exception 4. **1008.1.8.6 Delayed egress locks.** Subject to special review and approval by the commissioner, approved, listed, delayed egress locks may be permitted on doors serving spaces where extra safeguards are required in buildings that are equipped throughout with an automatic sprinkler system in accordance with Section 903.3.1.1 or an approved automatic smoke or heat detection system installed in accordance with Section 907, provided that the doors unlock in accordance with Items 1 through 6 below. A building occupant shall not be required to pass through more than one door equipped with a delayed egress lock before entering an exit. 1. The doors unlock upon actuation of the automatic sprinkler system or automatic fire detection system. 2. The doors unlock upon loss of power controlling the lock or lock mechanism. 3. The door locks shall have the capability of being unlocked by a signal from the fire command center. 4. The initiation of an irreversible process which will release the latch in not more than 15 seconds when a force of not more than 15 pounds (67 N) is applied for 1 second to the release device. Initiation of the irreversible process shall activate an audible signal in the vicinity of the door. Once the door lock has been released by the application of force to the releasing device, relocking shall be by manual means only. **Exception:** Where approved, a delay of not more than 30 seconds is permitted. 5. A sign shall be provided on the door located above and within 12 inches (305 mm) of the release device reading: PUSH UNTIL ALARM SOUNDS. DOOR CAN BE OPENED IN 15 SECONDS. 6. Emergency lighting shall be provided at the door. **Exceptions:** 1. Delayed egress locks shall not be permitted in buildings or spaces in Group A, E, F and H occupancies. However, in museums, delayed egress locks may be installed on exit doors subject to special review by the commissioner and Fire Commissioner. 2. Places of detention or restraints in Group I-3 are permitted to install delayed egress locks without the special review by the commissioner,

		provided that the installation complies with all of the other requirements of this section. **1008.1.8.7 Stairway doors.** Interior stairway means of egress doors shall be openable from both sides without the use of a key or special knowledge or effort. **Exceptions:** 1. Stairway discharge doors shall be openable from the egress side and shall only be locked from the opposite side. 2. This section shall not apply to doors arranged in accordance with Section 403.12. 3. In stairways serving not more than four stories, doors are permitted to be locked from the stair side, provided they are openable from the egress side. **1008.1.9 Panic and fire exit hardware.** Each door in a means of egress from an occupancy of Group A or E having an occupant load of 75 or more and any occupancy of Group H-1, H-2, H-3 or H-5 shall be provided with panic hardware or fire exit hardware. Where panic and fire exit hardware is installed, it shall comply with the following: 1. The actuating portion of the releasing device shall extend at least one-half of the door leaf width. 2. The maximum unlatching force shall not exceed 15 pounds (67 N). 3. If balanced doors are used and panic hardware is required, the panic hardware shall be the push-pad type and the pad shall not extend more than one-half the width of the door measured from the latch side. **1008.4 Security requirements for doors and windows.** The provisions of Sections 1008.4.1 through 1008.4.4 shall apply to Group R-2 occupancies. **1008.4.1 Entrance doors.** Building entrance doors and other exterior exit doors shall be equipped with heavy duty lock sets with auxiliary latch bolts to prevent the latch from being manipulated by means other than a key. Latch sets shall have stop-work in the inside cylinder controlled by a master key only. Outside cylinders of main entrance door locks shall be operated by the tenants' key, which shall not be keyed to also open the tenants' apartment door. A light or lights shall be provided at or near the outside of the front entranceway of the building providing not less than 5-foot candles (53.82 lux) intensity measured at the floor level for the full width of the entranceway. **1008.4.2 Doors to dwelling units.** Doors to dwelling units shall be equipped with a heavy duty latch set and a heavy duty dead bolt operable by a key from the outside and a thumb-turn from the inside. Those doors shall also be equipped with a chain guard so as to permit partial opening of the door. Dwelling unit entrance doors shall also be equipped with a viewing device located so as to enable a person on the inside of the entrance door to view a person immediately outside. **1008.4.3 Windows.** All openable windows shall be equipped with sash locks designed to be openable from the inside only. Grilles lockable from the inside only may be placed on the inside or outside of windows that are accessible from grade but that do not serve to provide access to exits. **1008.4.4 Intercommunication system.** Buildings containing eight or more dwelling units shall be provided with an intercommunication system located at the door giving access to the main entrance lobby, consisting of a device or devices for voice communication between the occupant of each dwelling unit and a person outside the door to the main entrance lobby, and permitting such dwelling unit occupant to release the locking mechanism of said door from the dwelling unit. In buildings provided with a full-time lobby attendant, the intercommunication system may be between each dwelling unit and the attendant's station.
30	1009	**SECTION BC 1009 STAIRWAYS AND HANDRAILS** **1009.1 Stairway width.** The width of stairways shall be determined as specified in Section 1005.1, but such width shall not be less than 44 inches (1118 mm). See Section 1007.3 for accessible means of egress stairways. **Exceptions:** 1. A width of not less than 36 inches (914 mm) shall be permitted in: 1.1. A stairway that serves an occupant load of 50 or less cumulative for all stories; or **1009.2 Headroom.** Stairways shall have a minimum headroom clearance of 84 inches (2134 mm) measured vertically from a line connecting the edge of the nosings. Such headroom shall be continuous above the stairway to the point where the line intersects the landing below, one tread depth beyond the

bottom riser. The minimum clearance shall be maintained the full width of the stairway and landing. Projections into the required width shall not be limited above the minimum headroom height.

1009.3 Stair treads and risers. Stair riser heights shall be 7 inches (178 mm) maximum and 4 inches (102 mm) minimum. Stair tread depths shall be 11 inches (279 mm) minimum. The riser height shall be measured vertically between the leading edges of adjacent treads. The greatest riser height within any flight of stairs shall not exceed the smallest by more than 0.375 inch (9.5 mm). The tread depth shall be measured horizontally between the vertical planes of the foremost projection of adjacent treads and at right angle to the tread's leading edge. The greatest tread depth within any flight of stairs shall not exceed the smallest by more than 0.375 inch (9.5 mm). Winder treads shall have a minimum tread depth of 11 inches (279 mm) measured at a right angle to the tread's leading edge at a point 12 inches (305 mm) from the side where the treads are narrower and a minimum tread depth of 10 inches (254 mm). The greatest winder tread depth at the 12-inch (305 mm) walk line within any flight of stairs shall not exceed the smallest by more than 0.375 inch (9.5 mm).

1009.3.1 Dimensional uniformity. Stair treads and risers shall be of uniform size and shape. The tolerance between the largest and smallest riser or between the largest and smallest tread shall not exceed 0.375 inch (9.5 mm) in any flight of stairs.

Exceptions:

1. Nonuniform riser dimensions of aisle stairs complying with Section 1024.11.2.
2. Consistently shaped winders, complying with Section 1009.8, differing from rectangular treads in the same stairway flight.
3. Where the bottom or top riser adjoins a sloping public way, walkway or driveway having an established grade and serving as a landing, the bottom or top riser is permitted to be reduced along the slope to less than 4 inches (102 mm) in height with the variation in height of the bottom or top riser not to exceed one unit vertical in 12 units horizontal (8-percent slope) of stairway width. The nosings or leading edges of treads at such nonuniform height risers shall have a distinctive marking stripe, different from any other nosing marking provided on the stair flight. The distinctive marking stripe shall be visible in descent of the stair and shall have a slip-resistant surface. Marking stripes shall have a width of at least 1 inch (25 mm) but not more than 2 inches (51 mm).

1009.3.2 Profile. The radius of curvature at the leading edge of the tread shall be not greater than 0.5 inch (12.7 mm). Beveling of nosings shall not exceed 0.5 inch (12.7 mm). Risers shall be solid and vertical or sloped from the underside of the leading edge of the tread above at an angle not more than 30 degrees (0.52 rad) from the vertical. The leading edge (nosings) of treads shall project not more than 1.25 inches (32 mm) beyond the tread below and all projections of the leading edges shall be of uniform size, including the leading edge of the floor at the top of a flight. Perforated risers with openings not exceeding $1/4$ inch (6.4 mm) shall be considered solid risers.

Exceptions:

1. Solid risers are not required for stairways that are not serving as means of egress or that are not required to comply with Section 1007.3, provided that the opening between treads does not permit the passage of a sphere with a diameter of 4 inches (102 mm).
2. Solid risers are not required for occupancies in Group I-3.
3. In Group R-3 occupancies, the following shall apply:

3.1. The radius of curvature at the leading edge of the tread shall be no greater than 0.5625 inch (14.3 mm).

3.2. Solid risers are not required provided that the opening between treads does not permit the passage of a sphere with a diameter of 4 inches (102 mm). However, the opening between treads is not limited on stairways with a total rise of 30 inches (762 mm) or less.

1009.4 Stairway landings. There shall be a floor or landing at the top and bottom of each stairway. The width of landings shall not be less than the width of stairways they serve. Every landing shall have a minimum dimension measured in the direction of travel equal to the width of the stairway. Such dimension need not exceed 48 inches (1219 mm) where the stairway has a straight run.

Exceptions:

1. Aisle stairs complying with Section 1024.
2. Doors opening onto a landing shall not reduce the landing to less than 75 percent of the required width. When fully open, the door shall not project more than 7 inches (178 mm) into a landing.

1009.5 Stairway construction. All stairways shall be built of materials consistent with the type permitted for the type of construction of the building,

except that wood handrails shall be permitted for all types of construction.

1009.5.1 Stairway walking surface. The walking surface of treads and landings of a stairway shall not be sloped steeper than one unit vertical in 48 units horizontal (2-percent slope) in any direction. Stairway treads and landings shall have a solid surface. Finish floor surfaces shall be securely attached.

Exception: In Group F, H and S occupancies, other than areas of parking structures accessible to the public, openings in treads and landings shall not be prohibited provided a sphere with a diameter of $1^1/_8$ inches (29 mm) cannot pass through the opening.

1009.5.2 Outdoor conditions. Outdoor stairways and outdoor approaches to stairways shall be designed so that water will not accumulate on walking surfaces. In other than occupancies in Group R-3, and occupancies in Group U that are accessory to an occupancy in Group R-3, treads, platforms and landings that are part of exterior stairways in climates subject to snow or ice shall be protected to prevent the accumulation of same.

1009.6 Vertical rise. A flight of stairs shall not have a vertical rise greater than 12 feet (3658 mm) between floor levels or landings, except that the vertical rise shall not be greater than 8 feet (2438 mm) in Group A and I occupancies.

Exception: Aisle stairs comply with Section 1024.

1009.7 Circular stairways. Circular stairways shall have a minimum tread depth and a maximum riser height in accordance with Section 1009.3 and the smaller radius shall not be less than twice the width of the stairway. The minimum tread depth measured 12 inches (305 mm) from the narrower end of the tread shall not be less than 11 inches (279 mm). The minimum tread depth at the narrow end shall not be less than 10 inches (254 mm).

1009.8 Winders. Winders are not permitted in means of egress stairways except in Group‡ R-3 occupancies or within dwelling units in Group R-2 occupancies.

1009.9 Spiral stairways. Spiral stairways are permitted to be used as a component in the means of egress only within dwelling units or from a space not more than 250 square feet (23 m^2) in area and serving not more than five occupants, or from galleries, catwalks and gridirons in accordance with Section 1014.6. A spiral stairway shall have a 7.5-inch (191 mm) minimum clear tread depth at a point 12 inches (305 mm) from the narrow edge. The risers shall be sufficient to provide a headroom of 78 inches (1981 mm) minimum, but riser height shall not be more than 9.5 inches (241 mm). The minimum stairway width shall be 26 inches (660 mm).

1009.11 Handrails. Stairways shall have handrails on each side. Handrails shall be adequate in strength and attachment in accordance with Section 1607.7. Handrails for ramps, where required by Section 1010.8, shall comply with this section.

Exceptions:

1. Aisle stairs complying with Section 1024 provided with a center handrail need not have additional handrails.
2. Stairways within dwelling units, spiral stairways and aisle stairs serving seating only on one side are permitted to have a handrail on one side only.
3. Decks, patios and walkways that have a single change in elevation where the landing depth on each side of the change of elevation is greater than what is required for a landing do not require handrails.
4. In Group R-3 occupancies, a change in elevation consisting of a single riser at an entrance or egress door does not require handrails.
5. Changes in room elevations of only one riser within dwelling units and sleeping units in Group R-2 and R-3 occupancies do not require handrails.
6. One handrail shall be allowed in enclosed exit stairs less than 44 inches (1118 mm) wide that do not serve as an accessible means of egress.

1009.11.1 Height. Handrail height, measured above stair tread nosings, or finish surface of ramp slope, shall be uniform, not less than 34 inches (864 mm) and not more than 38 inches (965 mm).

1009.11.2 Intermediate handrails. Intermediate handrails are required so that all portions of the stairway width required for egress capacity are within 30 inches (762 mm) of a handrail. On monumental stairs, handrails shall be located along the most direct path of egress travel.

1009.11.3 Handrail graspability. Handrails with a circular cross section shall have an outside diameter of at least 1.25 inches (32 mm) and not greater than 2 inches (51 mm) or shall provide equivalent graspability. If the handrail is not circular, it shall have a perimeter dimension of at least 4 inches (102 mm) and not greater than 6.25 inches (160 mm) with a maximum cross-section dimension of 2.25 inches (57 mm). Edges shall

		have a minimum radius of 0.01 inch (0.25mm). **1009.11.4 Continuity.** Handrail-gripping surfaces shall be continuous, without interruption by newel posts or other obstructions. **Exceptions:** 1. Handrails within dwelling units are permitted to be interrupted by a newel post at a stair landing. 2. Within a dwelling unit, the use of a volute, turnout or starting easing is allowed on the lowest tread. 3. Handrail brackets or balusters attached to the bottom surface of the handrail that do not project horizontally beyond the sides of the handrail within 1.5 inches (38 mm) of the bottom of the handrail shall not be considered to be obstructions and provided further that for each 0.5 inch (13 mm) of additional handrail perimeter dimension above 4 inches (102 mm), the vertical clearance dimension of 1.5 inches (38 mm) shall be permitted to be reduced by 0.125 inch (3 mm). **1009.11.5 Handrail extensions.** Handrails shall return to a wall, guard or the walking surface or shall be continuous to the handrail of an adjacent stair flight. Where handrails are not continuous between flights, the handrails shall extend horizontally at least 12 inches (305 mm) beyond the top riser and continue to slope for the depth of one tread beyond the bottom riser. **1009.11.6 Clearance.** Clear space between a handrail and a wall or other surface shall be a minimum of 1.5 inches (38 mm). A handrail and a wall or other surface adjacent to the handrail shall be free of any sharp or abrasive elements. **1009.11.7 Stairway projections.** Projections into the required width at each handrail shall not exceed 4.5 inches (114 mm).
43	1101.1-1110 & ICC/A117.1(03)	**SECTION 1101 GENERAL** **1101.1 Scope.** The provisions of this chapter shall control the design and construction of facilities for accessibility to physically disabled persons. **1101.2 Design.** Buildings and facilities shall be designed and constructed to be accessible in accordance with this code and ICC/ANSI A117.1. **SECTION BC 1103 SCOPING REQUIREMENTS** **1103.1 Where required.** Buildings and structures, temporary or permanent, including their associated sites and facilities, shall be accessible to persons with physical disabilities. **1103.2 General exceptions.** Sites, buildings, facilities and elements shall be exempt from this chapter to the extent specified in this section. **1103.2.1 Specific requirements.** Accessibility is not required in buildings and facilities, or portions thereof, to the extent permitted by Sections 1104through 1110. **1103.2.2 Existing buildings.** Existing buildings shall comply with Section 28-101.4 of the *Administrative Code*.‡ **1103.2.3 Employee work areas.** All or any portion of a space used exclusively by employees and only for work shall be required to comply only with Section 1103.2.3. However, common use circulation paths, located within employee work areas shall also comply with Section 1104.3.1. **1103.2.3.1 Employee work areas and work stations.** Spaces and elements within employee work areas shall comply with Sections 907.9.1.2, 1007 and1104.3.1 and shall be designed and constructed so that individuals with disabilities can approach, enter and exit the work area. In addition, at least one and not less than five percent of seating, tables and/or work stations, if provided, within employee work areas shall comply with applicable sections of ICC A117.1. **SECTION 1104 ACCESSIBLE ROUTE** **1104.1 Site arrival points.** Accessible routes within the site shall be provided from public transportation stops; accessible parking; accessible passenger loading zones; and public streets or sidewalks to the accessible building entrance served. **Exception:** Other than in buildings or facilities containing or serving Type B units, an accessible route shall not be required between site arrival points and the building or facility entrance if the only means of access between them is a vehicular way not providing for pedestrian access.

1104.2 Within a site. At least one accessible route shall connect accessible buildings, accessible facilities, accessible elements and accessible spaces that are on the same site.

Exception: An accessible route is not required between accessible buildings, accessible facilities, accessible elements and accessible spaces that have, as the only means of access between them, a vehicular way not providing for pedestrian access.

1104.3 Connected spaces. When a building or portion of a building is required to be accessible, an accessible route shall be provided to each portion of the building, to accessible building entrances connecting accessible pedestrian walkways and the public way.

Exception: In assembly areas with fixed seating required to be accessible, an accessible route shall not be required to serve fixed seating where wheelchair spaces or designated aisle seats required to be on an accessible route are not provided.

1104.3.1 Employee work areas. Common use circulation paths within employee work areas shall be accessible routes.

Exceptions:
1. Common use circulation paths, located within employee work areas that are less than 300 square feet (27.9 m^2) in size and defined by permanently installed partitions, counters, casework or furnishings, shall not be required to be accessible routes.
2. Common use circulation paths, located within employee work areas, that are an integral component of equipment, shall not be required to be accessible routes.
3. Common use circulation paths, located within exterior employee work areas that are fully exposed to the weather, shall not be required to be accessible routes.

1104.5 Location. Accessible routes shall coincide with or be located in the same area as a general circulation path. Where the circulation path is interior, the accessible route shall also be interior. Where only one accessible route is provided, the accessible route shall not pass through kitchens, storage rooms, restrooms, closets or similar spaces.

1104.6 Security barriers. Security barriers including, but not limited to, security bollards and security check points shall not obstruct a required accessible route or accessible means of egress.

Exception: Where security barriers incorporate elements that cannot comply with these requirements, such as certain metal detectors, fluoroscopes or other similar devices, the accessible route shall be permitted to be provided adjacent to security screening devices. The accessible route shall permit persons with disabilities passing around security barriers to maintain visual contact with their personal items to the same extent provided others passing through the security barrier.

SECTION 1105 ACCESSIBLE ENTRANCES

1105.1 Public entrances. In addition to accessible entrances required by Sections 1105.1.1 through 1105.1.6, at least 60 percent of all public entrances shall be accessible.

Exceptions:

PASSERO ASSOCIATES
engineering architecture

1. An accessible entrance is not required to areas not required to be accessible.
2. Loading and service entrances that are not the only entrance to a tenant space.

1105.1.3 Restricted entrances. Where restricted entrances are provided to a building or facility, at least one restricted entrance to the building or facility shall be accessible.

1105.1.5 Service entrances. If a service entrance is the only entrance to a building or a tenant space in a facility, that entrance shall be accessible.

SECTION BC 1106 PARKING AND PASSENGER LOADING FACILITIES

1106.1 Required. Where parking is provided, 5 percent of the total number of parking spaces, but not less than one parking space, shall be accessible parking spaces except as otherwise required by Sections 1106.2 through 1106.4. Van-accessible parking spaces shall be provided in accordance with Section 1106.5.Accessible parking spaces shall be designed and constructed in accordance with Section 502 (Parking Spaces) of ICC A117.1. The number of accessible parking spaces shall be determined based on the total number of parking spaces provided for the facility. Where a determination of the minimum number of parking spaces results in a number containing a decimal of 0.5 or more, the next highest integer shall be used.
Exception: This section does not apply to parking spaces used exclusively for buses, trucks, other delivery vehicles, law enforcement vehicles or vehicular impound where lots accessed by the public are provided with an accessible passenger loading zone.

1106.5 Van spaces. For every six or fraction of six accessible parking spaces, at least one space shall be a van-accessible parking space. Van-accessible parking spaces shall be designed and constructed in accordance with ICC A117.1, including Section 502 (Parking Spaces).

1106.6 Location. Accessible parking spaces shall be located on the shortest accessible route of travel from adjacent parking to an accessible building entrance. Accessible parking spaces shall be dispersed among the various types of parking facilities provided. In parking facilities that do not serve a particular building, accessible parking spaces shall be located on the shortest route to an accessible pedestrian entrance to the parking facility. Where buildings have multiple accessible entrances with adjacent parking, accessible parking spaces shall be dispersed and located near the accessible entrances. In Occupancy Groups R-2 and R-3, at least one of each type of parking space shall be accessible.
Exceptions:

1. In multilevel parking structures, van-accessible parking spaces complying with Section 502 (Parking Spaces) of ICC A117.1 may be provided on one level.
2. In an attended parking facility in which vehicles customarily are parked and later returned to their drivers by an attendant employed by the parking facility, accessible parking spaces need not be designated by a sign or lines if all of the following conditions are met:
2.1. Van-accessible parking spaces complying with Section 502 (Parking Spaces) of ICC A117.1 are provided;
2.2. A passenger loading zone complying with Section 1106.7 is provided where an attendant shall take control of the vehicles. A vertical clearance of 98 inches (2489 mm) shall be permitted at such loading zone;
2.3. At least one accessible parking space shall remain available unless all accessible parking spaces are occupied;
2.4. The attendant shall park and retrieve all vehicles not equipped with special controls entering the facility in which a person with disabilities is either the driver or a passenger, provided accessible parking space is available;
2.5. The attendant shall direct the drivers of vehicles equipped with special controls to accessible parking spaces. The attendant shall accompany such drivers to and from such space along an accessible route when they enter and exit the facility. If necessary, the accessible route and accessible parking space shall be created by the repositioning of vehicles parked previously by the attendant; and
2.6. Each van-accessible parking space shall have two permanently and prominently posted signs. One shall include the International Symbol of Accessibility complying with Section 703.6.3.1 of ICC A117.1. The other sign shall note that vehicles parked in such spaces are subject to being moved by an attendant of the parking facility in order to accommodate a vehicle which cannot be accommodated in another accessible parking space. Such signs shall not be obstructed by a vehicle parked in the space.

PASSERO ASSOCIATES
engineering architecture

1106.7 Passenger loading zones. Passenger loading zones shall be designed and constructed in accordance with ICC A117.1 including Section 503 (Passenger Loading Zones). Where there are curbs between the access aisle and the vehicle pull-up space, a curb ramp complying with ICC A117.1 including Section 406 (Curb Ramps) shall be provided.

1106.7.1 Continuous loading zones. Where passenger loading zones are provided, at least one accessible passenger loading zone shall be provided within each continuous 100 linear feet (30.4 m) of loading zone space, or fraction thereof, so that travel between accessible passenger loading zones will not exceed 100 linear feet (30.4 m).
1106.7.2 Medical facilities. A passenger loading zone shall be provided at an accessible entrance to licensed medical and long-term care facilities where people receive physical or medical treatment or care and where the period of stay exceeds 24 hours.
1106.7.3 Valet parking. A passenger loading zone shall be provided at valet parking services.

SECTION 1109 OTHER FEATURES AND FACILITIES

1109.1 General. Accessible building features and facilities shall be provided in accordance with Sections 1109.2 through 1109.14.

1109.2 Toilet and bathing facilities. Toilet rooms and bathing facilities shall be accessible. Where a floor level is not required to be connected by an accessible route, the only toilet rooms or bathing facilities provided within the facility shall not be located on the inaccessible floor. At least one of each type of fixture, element, control or dispenser in each accessible toilet room and bathing facility shall be accessible.

Exceptions:

1. In toilet rooms or bathing facilities accessed only through a private office, not for common or public use and intended for use by a single occupant, any of the following alternatives are allowed:
1.1. Doors are permitted to swing into the clear floor space, provided the door swing can be reversed to meet the requirements in ICC/ANSI A117.1;
1.2 The height requirements for the water closet in ICC/ANSI A117.1 are not applicable;
1.3. Grab bars are not required to be installed in a toilet room, provided that reinforcement has been installed in the walls and located so as to permit the installation of such grab bars; and
1.4. The requirement for height, knee and toe clearance shall not apply to a lavatory.
2. This section is not applicable to toilet and bathing facilities that serve dwelling units or sleeping units that are not required to be accessible by Section 1107.
3. Where multiple single-user toilet rooms or bathing facilities are clustered at a single location, at least 50 percent but not less than one room for each use at each cluster shall be accessible.
4. Where no more than one urinal is provided in a toilet room or bathing facility, the urinal is not required to be accessible.
5. Toilet rooms that are part of critical care or intensive care patient sleeping rooms are not required to be accessible.
1109.2.1 Unisex toilet and bathing rooms. In assembly and mercantile occupancies, an accessible unisex toilet room shall be provided where an aggregate of six or more male and female water closets is required. In buildings of mixed occupancy, only those water closets required for the assembly or mercantile occupancy shall be used to determine the unisex toilet room requirement. In recreational facilities where separate-sex bathing rooms are provided, an accessible unisex bathing room shall be provided. Fixtures located within unisex toilet and bathing rooms shall be included in determining the number of fixtures provided in an occupancy.

Exception: Where each separate-sex bathing room has only one shower or bathtub fixture, a unisex bathing room is not required.

1109.2.1.1 Standard. Unisex toilet and bathing rooms shall comply with Sections 1109.2.1.2 through 1109.2.1.7 and ICC/ANSI A117.1.
1109.2.1.2 Unisex toilet rooms. Unisex toilet rooms shall include only one water closet and only one lavatory. A unisex bathing room in accordance with Section 1109.2.1.3 shall be considered a unisex toilet room.

Exception: A urinal is permitted to be provided in addition to the water closet in a unisex toilet room.
1109.2.1.3 Unisex bathing rooms. Unisex bathing rooms shall include only one shower or bathtub fixture. Unisex bathing rooms shall also include one water closet and one lavatory. Where storage facilities are provided for separate-sex bathing rooms, accessible storage facilities shall be provided for unisex bathing rooms.
1109.2.1.4 Location. Unisex toilet and bathing rooms shall be located on an accessible route. Unisex toilet rooms shall be located not more than one story above or below separate-sex toilet rooms. The accessible route from any separate-sex toilet room to a unisex toilet room shall not exceed 500 feet (152 m).
1109.2.1.6 Clear floor space. Where doors swing into a unisex toilet or bathing room, a clear floor space not less than 30 inches by 48 inches (762 mm by 1219 mm) shall be provided, within the room, beyond the area of the door swing.
1109.2.1.7 Privacy. Doors to unisex toilet and bathing rooms shall be securable from within the room.
1109.2.2 Water closet compartment. Where water closet compartments are provided in a toilet room or bathing facility, at least one wheelchair-accessible compartment shall be provided. Where the combined total water closet compartments and urinals provided in a toilet room or bathing facility is six or more, at least one ambulatory-accessible water closet compartment shall be provided in addition to the wheelchair-accessible compartment. Wheelchair-accessible and ambulatory-accessible compartments shall comply with ICC/ANSI A117.1.

1109.3 Sinks. Where sinks are provided, at least 5 percent but not less than one provided in accessible spaces shall comply with ICC/ANSI A117.1.

Exception: Mop or service sinks are not required to be accessible.

1109.4 Kitchens and kitchenettes. Where kitchens and kitchenettes are provided in accessible spaces or rooms, they shall be accessible in accordance with ICC/ANSI A117.1.

1109.5 Drinking fountains. Where drinking fountains are provided on an exterior site, on a floor or within a secured area, the drinking fountains shall be provided in accordance with Sections 1109.5.1 and 1109.5.2.

1109.5.1 Minimum number. No fewer than two drinking fountains shall be provided. One drinking fountain shall comply with the requirements for people who use a wheelchair and one drinking fountain shall comply with the requirements for standing persons.

Exception: A single drinking fountain that complies with the requirements for people who use a wheelchair and standing persons shall be permitted to be substituted for two separate drinking fountains.
1109.5.2 More than the minimum number. Where more than the minimum number of drinking fountains specified in Section 1109.5.1 are provided, 50 percent of the total number of drinking fountains provided shall comply with the requirements for persons who use a wheelchair and 50 percent of the total number of drinking fountains provided shall comply with the requirements for standing persons.

Exception: Where 50 percent of the drinking fountains yields a fraction, 50 percent shall be permitted to be rounded up or down, provided that the total number of drinking fountains complying with this section equals 100 percent of the drinking fountains.

1109.8 Storage. Where fixed or built-in storage elements such as cabinets, shelves, medicine cabinets, closets and drawers are provided in required

PASSERO ASSOCIATES
engineering architecture

accessible spaces, at least one of each type shall contain storage space complying with ICC/ANSI A117.1.

1109.8.1 Lockers. Where lockers are provided in accessible spaces, at least five percent, but not less than one, of each type shall be accessible.
1109.8.2 Shelving and display units. Self-service shelves and display units shall be located on an accessible route. Such shelving and display units shall not be required to comply with reach-range provisions.
1109.8.3 Coat hooks and shelves. Where coat hooks and shelves are provided in toilet rooms or toilet compartments or in dressing, fitting or locker rooms, at least one of each type shall be accessible and shall be provided in accessible toilet rooms without toilet compartments, accessible toilet compartments and accessible dressing, fitting and locker rooms.

1109.11 Seating at tables, counters and work surfaces. Where seating or standing space at fixed or built-in tables, counters or work surfaces is provided in accessible spaces, at least 5 percent of the seating and standing spaces, but not less than one, shall be accessible. In Group I-3 occupancy visiting areas at least 5 percent, but not less than one, cubicle or counter shall be accessible on both the visitor and detainee sides.

Exceptions:

1. Check-writing surfaces at check-out aisles not required to comply with Section 1109.12.2 are not required to be accessible.

1109.11.1 Dispersion. Accessible fixed or built-in seating at tables, counters or work surfaces shall be distributed throughout the space or facility containing such elements.

1109.12 Service facilities. Service facilities shall provide for accessible features in accordance with Sections 1109.12.1 through 1109.12.5.

1109.12.1 Dressing, fitting and locker rooms. Where dressing rooms, fitting rooms or locker rooms are provided, at least 5 percent, but not less than one, of each type of use in each cluster provided shall be accessible.
1109.12.2 Check-out aisles. Where check-out aisles are provided, accessible check-out aisles shall be provided in accordance with Table 1109.12.2. Where check-out aisles serve different functions, at least one accessible check-out aisle shall be provided for each function. Where checkout aisles serve different functions, accessible check-out aisles shall be provided in accordance with Table 1109.12.2 for each function. Where check-out aisles are dispersed throughout the building or facility, accessible check-out aisles shall also be dispersed. Traffic control devices, security devices and turnstiles located in accessible check-out aisles or lanes shall be accessible.

TABLE 1109.12.2 ACCESSIBLE CHECK-OUT AISLES

TOTAL CHECK-OUT AISLES OF EACH FUNCTION	MINIMUM NUMBER OF ACCESSIBLE CHECK-OUT AISLES OF EACH FUNCTION
1 to 4	1
5 to 8	2
9 to 15	3
Over 15	3, plus 20% of additional aisles

1109.12.3 Point of sale and service counters. Where counters are provided for sales or distribution of goods or services, at least one of each type provided shall be accessible. Where such counters are dispersed throughout the building or facility, accessible counters shall also be dispersed.
1109.12.5 Queue and waiting lines. Queue and waiting lines servicing accessible counters or check-out aisles shall be accessible.

1109.13 Controls, operating mechanisms and hardware. Controls, operating mechanisms and hardware intended for operation by the occupant, including switches that control lighting and ventilation and electrical convenience outlets, in accessible spaces, along accessible routes or as parts of accessible elements shall be accessible.

Exceptions:

1. Operable parts that are intended for use only by service or maintenance personnel shall not be required to be accessible.
2. Electrical or communication receptacles serving a dedicated use shall not be required to be accessible.
3. Where two or more outlets are provided in a kitchen above a length of counter top that is uninterrupted by a sink or appliance, one outlet shall not be required to be accessible.
4. Floor electrical receptacles shall not be required to be accessible.
5. HVAC diffusers shall not be required to be accessible.
6. Except for light switches, where redundant controls are provided for a single element, one control in each space shall not be required to be accessible.
7. Access doors or gates in barrier walls and fences protecting pools, spas and hot tubs shall be permitted to have operable parts of the release of latch on self-latching devices at 54 inches (1370 mm) maximum and 48 inches minimum above the finished floor or ground, provided the self-latching devices are not also self-locking devices, operated by means of a key, electronic opener, or integral combination lock.

1109.13.1 Operable window. Where operable windows are provided in rooms that are required to be accessible in accordance with Sections 1107.5.1.1, 1107.5.2.1, 1107.5.3.1, 1107.5.4, 1107.6.1.1, 1107.6.2.2.1 and 1107.6.4.1, at least one window in each room shall be accessible and each required operable window shall be accessible.

Exception: Accessible windows are not required in bathrooms or kitchens.

SECTION 1110 SIGNAGE

1110.1 Signs. Required accessible elements shall be identified by the International Symbol of Accessibility at the following locations:

1. Accessible parking spaces required by Section 1106.1 except where the total number of parking spaces provided is four or less.
2. Accessible passenger loading zones.
3. Accessible areas of refuge required by Section 1007.6.
4. Accessible rooms where multiple single-user toilet or bathing rooms are clustered at a single location.
5. Accessible entrances where not all entrances are accessible.
6. Accessible check-out aisles where not all aisles are accessible. The sign, where provided, shall be above the check-out aisle in the same location as the check-out aisle number or type of check-out identification.
7. Unisex toilet and bathing rooms.
8. Accessible dressing, fitting and locker rooms where not all such rooms are accessible.

1110.2 Directional signage. Directional signage indicating the route to the nearest like accessible element shall be provided at the following locations. These directional signs shall include the International Symbol of Accessibility:

1. Inaccessible building entrances.
2. Inaccessible public toilets and bathing facilities.
3. Elevators not serving an accessible route.

4. At each separate-sex toilet and bathing room indicating the location of the nearest unisex toilet or bathing room where provided in accordance with Section 1109.2.1.
5. At exits and elevators serving a required accessible space, but not providing an approved accessible means of egress, signage shall be provided in accordance with Section 1007.7.

1110.3 Other signs. Signage indicating special accessibility provisions shall be provided as shown:

1. Each assembly area required to comply with Section 1108.2.6 shall provide a sign notifying patrons of the availability of assistive listening systems.

Exception: Where ticket offices or windows are provided, signs are not required at each assembly area provided that signs are displayed at each ticket office or window informing patrons of the availability of assistive listening systems.
2. At each door to an egress stairway, exit passageway and exit discharge, signage shall be provided in accordance with Section 1011.3.
3. At areas of refuge, signage shall be provided in accordance with Sections 1007.6.3 through 1007.6.5.
4. At areas for assisted rescue, signage shall be provided in accordance with Section 1007.8.3.

ICC/A117.1

301 General

301.1 Scope. The provisions of Chapter 3 shall apply where required by the scoping provisions adopted by the administrative authority or by Chapters 4 through 10.

302 Floor Surfaces

302.1 General. Floor surfaces shall be stable, firm, and slip resistant, and shall comply with Section 302. Changes in level in floor surfaces shall comply with Section 303.

302.2 Carpet. Carpet or carpet tile shall be securely attached and shall have a firm cushion, pad, or backing or no cushion or pad. Carpet or carpet tile shall have a level loop, textured loop, level cut pile, or level cut/uncut pile texture. The pile shall be 1/2 inch (13 mm) maximum in height. Exposed edges of carpet shall be fastened to the floor and shall have trim along the entire length of the exposed edge. Carpet edge trim shall comply with Section 303.

Fig. 302.2 Carpet on Floor Surfaces

302.3 Openings. Openings in floor surfaces shall be of a size that does not permit the passage of a 1/2 inch (13 mm) diameter sphere, except as allowed in Sections 407.4.3, 408.4.3, 409.4.3, 410.4, and 805.10. Elongated openings shall be placed so that the long dimension is perpendicular to the dominant

PASSERO ASSOCIATES
engineering architecture

direction of travel.

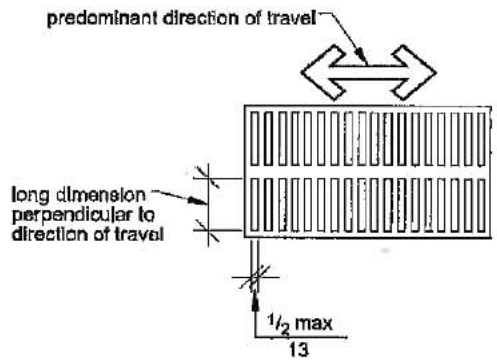

Fig. 302.3 Openings in Floor Surfaces

303 Changes in Level

303.1 General. Changes in level in floor surfaces shall comply with Section 303.

303.2 Vertical. Changes in level of 1/4 inch (6.4 mm) maximum in height shall be permitted to be vertical.

Fig. 303.2 Carpet on Floor Surfaces

303.3 Beveled. Changes in level greater than 1/4 inch (6.4 mm) in height and not more than 1/2 inch (13 mm) maximum in height shall be beveled with a slope not steeper than 1:2.

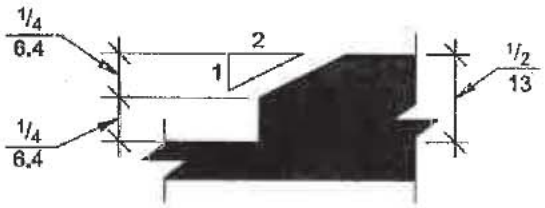

(a)

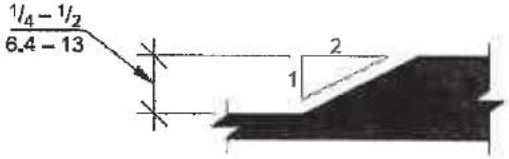

(b)

Fig. 303.3 Beveled Changes in Level

303.4 Ramped. Changes in level greater that 1/2 inch (13 mm) in height shall be ramped and shall comply with Section 405 or 406.

304 Turning Space

304.1 General. A turning space shall comply with Section 304.

304.2 Floor Surface. Floor surfaces of a turning space shall have a slope not steeper than 1:48 and shall comply with Section 302.

304.3 Size. Turning spaces shall comply with Section 304.3.1 or 304.3.2.

PASSERO ASSOCIATES
engineering architecture

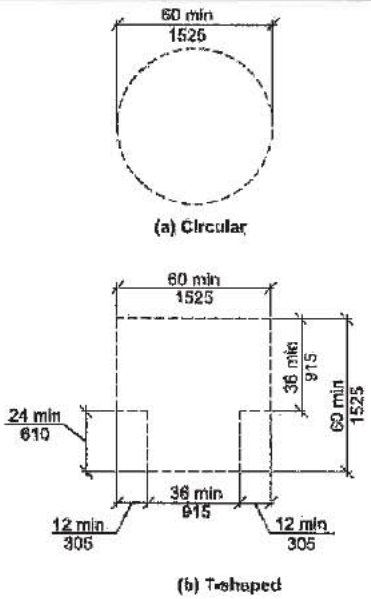

Fig. 304.3 Size of Turning Space

304.3.1 Circular Space. The turning space shall be a circular space with a 60-inch (1525 mm) minimum diameter. The turning space shall be permitted to include knee and toe clearance complying with Section 306.

304.3.2 T-Shaped Space. The turning space shall be a T-shaped space within a 60-inch (1525 mm) minimum square, with arms and base 36 inches (915 mm) minimum in width. Each arm of the T shall be clear of obstructions 12 inches (305 mm) minimum in each direction, and the base shall be clear of obstructions 24 inches (610 mm) minimum. The turning space shall be permitted to include knee and toe clearance complying with Section 306 only at the end of either the base or one arm.

304.4 Door Swing. Unless otherwise specified, doors shall be permitted to swing into turning spaces.

305 Clear Floor Space

305.1 General. A clear floor space shall comply with Section 305.

305.2 Floor Surfaces. Floor surfaces of a clear floor space shall have a slope not steeper than 1:48 and shall comply with Section 302.

305.3 Size. The clear floor space shall be 48 inches (1220 mm) minimum in length and 30 inches (760 mm) minimum in width.

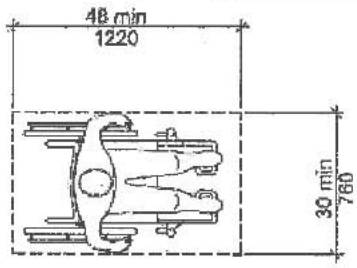

Fig. 305.3 Size of Clear Floor Space

305.4 Knee and Toe Clearance. Unless otherwise specified, clear floor space shall be permitted to include knee and toe clearance complying with Section 306.

305.5 Position. Unless otherwise specified, the clear floor space shall be positioned for either forward or parallel approach to an element.

PASSERO ASSOCIATES
engineering architecture

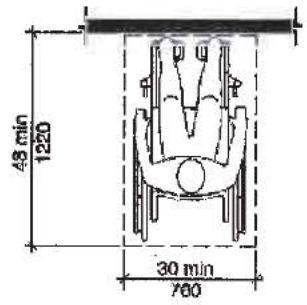

Fig. 305.5 Position of Clear Floor Space

305.6 Approach. One full, unobstructed side of the clear floor space shall adjoin or overlap an accessible route or adjoin another clear floor space.

305.7 Alcoves. If a clear floor space is in an alcove or otherwise confined on all or part of three sides, additional maneuvering clearances complying with Sections 305.7.1 and 305.7.2 shall be provided, as applicable.

PASSERO ASSOCIATES
engineering architecture

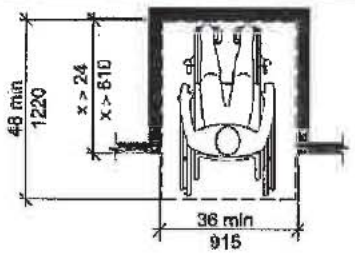

(a) Forward Approach

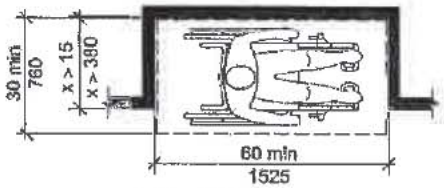

(b) Parallel Approach

Fig. 305.7 Maneuvering Clearance in an Alcove

305.7.1 Parallel Approach. Where the clear floor space is positioned for a parallel approach, the alcove shall be 60 inches (1525 mm) minimum in width where the depth exceeds 15 inches (380 mm).

305.7.2 Forward Approach. Where the clear floor space is positioned for a forward approach, the alcove shall be 36 inches (915 mm) minimum in width where the depth exceeds 24 inches (610 mm).

306 Knee and Toe Clearance

306.1 General. Where space beneath an element is included as part of clear floor space at an element, clearance at an element, or a turning space, the space shall comply with Section 306. Additional space beyond knee and toe clearance shall be permitted beneath elements.

306.2 Toe Clearance.

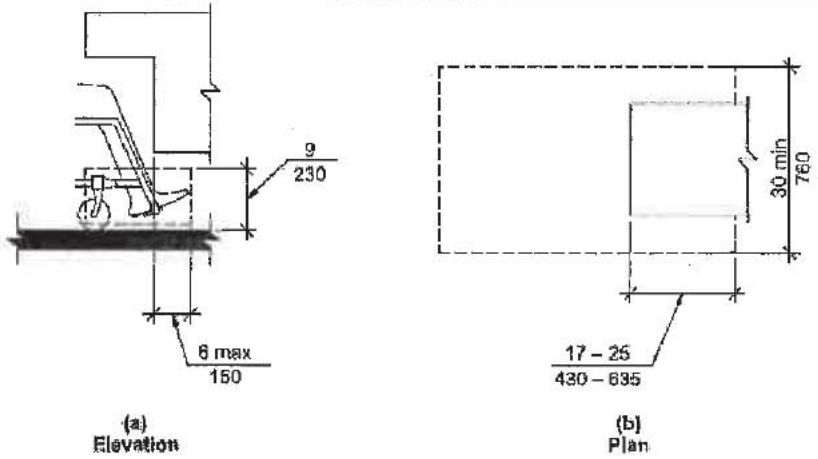

Fig. 306.2 Toe Clearance

306.2.1 General. Space beneath an element between the floor and 9 inches (230 mm) above the floor shall be considered toe clearance and shall comply with Section 306.2.

306.2.2 Maximum Depth. Toe clearance shall be permitted to extend 25 inches (635 mm) maximum under an element.

306.2.3 Minimum Depth. Where toe clearance is required at an element as part of a clear floor space, the toe clearance shall extend 17 inches (430 mm) minimum beneath the element.

306.2.4 Additional Clearance. Space extending greater than 6 inches (150 mm) beyond the available knee clearance at 9 inches (230 mm) above the floor shall not be considered toe clearance.

306.2.5 Width. Toe clearance shall be 30 inches (760 mm) minimum in width.

306.3 Knee Clearance.

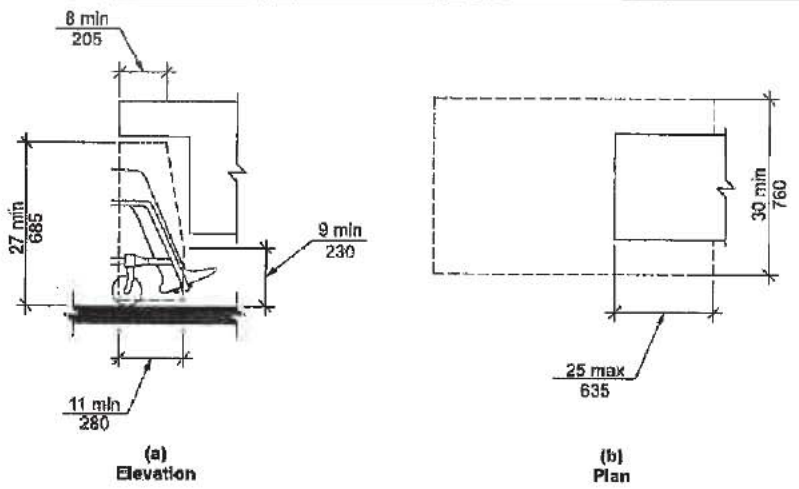

Fig. 306.3 Knee Clearance

306.3.1 General. Space beneath an element between 9 inches (230 mm) and 27 inches (685 mm) above the floor shall be considered knee clearance and shall comply with Section 306.3.

306.3.2 Maximum Depth. Knee clearance shall be permitted to extend 25 inches (635 mm) maximum under an element at 9 inches (230 mm) above the floor.

306.3.3 Minimum Depth. Where knee clearance is required beneath an element as part of a clear floor space, the knee clearance shall be 11 inches (280 mm) minimum in depth at 9 inches (230 mm) above the floor, and 8 inches (205 mm) minimum in depth at 27 inches (685 mm) above the floor.

306.3.4 Clearance Reduction. Between 9 inches (230 mm) and 27 inches (685 mm) above the floor, the knee clearance shall be permitted to be reduced at a rate of 1 inch (25 mm) for each 6 inches (150 mm) in height.

306.3.5 Width. Knee clearance shall be 30 inches (760 mm) minimum in width.

307 Protruding Objects

307.1 General. Protruding objects on circulation paths shall comply with Section 307.

307.2 Protrusion Limits. Objects with leading edges more than 27 inches (685 mm) and not more than 80 inches (2030 mm) above the floor shall protrude 4 inches (100 mm) maximum horizontally into the circulation path.

EXCEPTIONS:

1. Handrails shall be permitted to protrude 4½ inches (115 mm) maximum.
2. Door closers and door stops shall be permitted to be 78 inches (1980 mm) minimum above the floor.

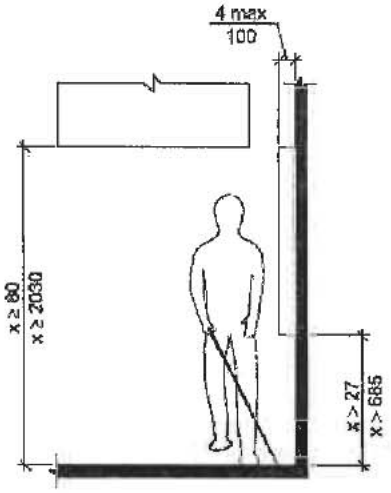

Fig. 307.2 Limits of Protruding Objects

307.3 Post-Mounted Objects. Objects on posts or pylons shall be permitted to overhang 4 inches (100 mm) maximum where more than 27 inches (685 mm) and not more than 80 inches (2030 mm) above the floor. Objects on multiple posts or pylons where the clear distance between the posts or pylons is greater than 12 inches (305 mm) shall have the lowest edge of such object either 27 inches (685 mm) maximum or 80 inches (2030 mm) minimum above the floor.

PASSERO ASSOCIATES
engineering architecture

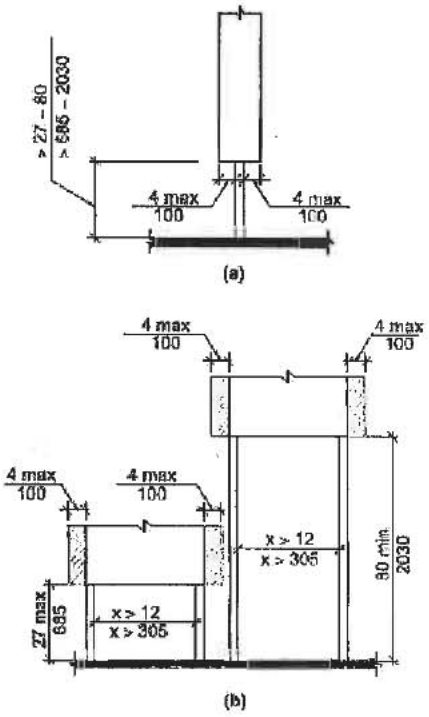

Fig. 307.3 Post-Mounted Protruding Objects

307.4 Reduced Vertical Clearance. Guardrails or other barriers shall be provided where object protrusion is beyond the limits allowed by Sections 307.2 and 307.3, and where the vertical clearance is less than 80 inches (2030 mm) above the floor. The leading edge of such guardrail or barrier shall be 27 inches (685 mm) maximum above the floor.

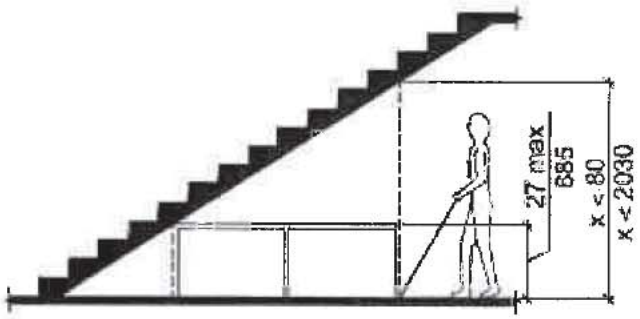

Fig. 307.4 Reduced Vertical Clearance

307.5 Required Clear Width. Protruding objects shall not reduce the clear width required for accessible routes.

308 Reach Ranges

308.1 General. Reach ranges shall comply with Section 308.

308.2 Forward Reach.

308.2.1 Unobstructed. Where a forward reach is unobstructed, the high forward reach shall be 48 inches (1220 mm) maximum and the low forward reach shall be 15 inches (380 mm) minimum above the floor.

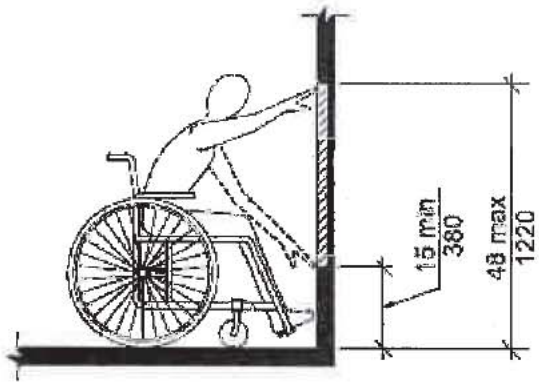

Fig. 308.2.1 Unobstructed Forward Reach

308.2.2 Obstructed High Reach. Where a high forward reach is over an obstruction, the clear floor space shall extend beneath the element for a distance not less than the required reach depth over the obstruction. The high forward reach shall be 48 inches (1220 mm) maximum where the reach depth is 20 inches (510 mm) maximum. Where the reach depth exceeds 20 inches (510 mm), the high forward reach shall be 44 inches (1120 mm) maximum, and the reach depth shall be 25 inches (635 mm) maximum.

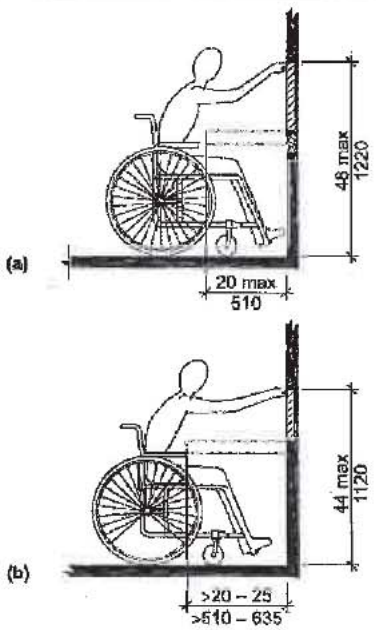

Fig. 308.2.2 Obstructed High Forward Reach

308.3 Side Reach.

308.3.1 Unobstructed. Where a clear floor space allows a parallel approach to an element and the side reach is unobstructed, the high side reach shall be 48 inches (1220 mm) maximum and the low side reach shall be 15 inches (380 mm) minimum above the floor.

EXCEPTION: Existing elements shall be permitted at 54 inches (1370 mm) maximum above the floor.

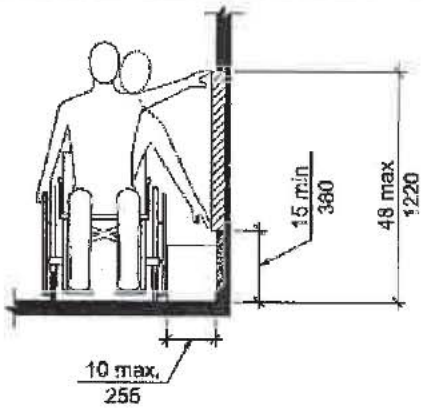

Fig. 308.3.1 Unobstructed Side Reach

308.3.2 Obstructed High Reach. Where a clear floor space allows a parallel approach to an object and the high side reach is over an obstruction, the height of the obstruction shall be 34 inches (865 mm) maximum and the depth of the obstruction shall be 24 inches (610 mm) maximum. The high side reach shall be 48 inches (1220 mm) maximum for a reach depth of 10 inches (255 mm) maximum. Where the reach depth exceeds 10 inches (255 mm), the high side reach shall be 46 inches (1170 mm) maximum for a reach depth of 24 inches (610 mm) maximum.

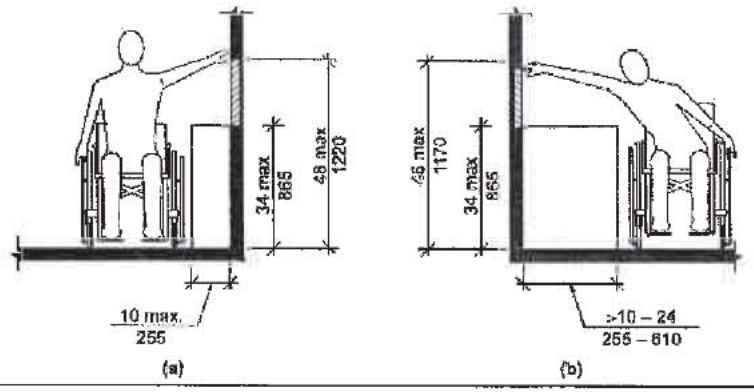

PASSERO ASSOCIATES
engineering architecture

		Fig. 308.3.2 Obstructed High Side Reach **309 Operable Parts** **309.1 General.** Operable parts required to be accessible shall comply with Section 309. **309.2 Clear Floor Space.** A clear floor space complying with Section 305 shall be provided. **309.3 Height.** Operable parts shall be placed within one or more of the reach ranges specified in Section 308. **309.4 Operation.** Operable parts shall be operable with one hand and shall not require tight grasping, pinching, or twisting of the wrist. The force required to activate operable parts shall be 5.0 pounds (22.2 N) maximum. **EXCEPTION:** Gas pump nozzles shall not be required to provide operable parts that have an activating force of 5.0 pounds (22.2 N) maximum.
44	2010 NYS ECCC & IECC 2012	**2010 NYS ECCC** **SECTION 101 SCOPE AND GENERAL REQUIREMENTS** **101.4 Applicability.** The provisions of this code shall apply to the construction of buildings. This code shall apply as provided in this Section 101.4. Where, in any specific case, different sections of this code specify different materials, methods of construction or other requirements, the most restrictive shall govern. Where there is a conflict between a general requirement and a specific requirement, the specific requirement shall govern. **101.4.1 Existing buildings.** Except as specified in this chapter, this code shall not be used to require the removal, *alteration* or abandonment of, nor prevent the continued use and maintenance of, an existing building or building system lawfully in existence at the time of adoption of this code. **101.4.3 Additions, alterations or renovations.** It is intended that this code apply to additions, alterations, and renovations to existing residential building in all cases where the 2009 IECC would apply, and that this code shall apply to additions, alterations and renovations to existing commercial buildings in all cases where ASHRAE 90.1-2007 would apply. Additions, alterations or renovations to an existing building, building system or portion thereof shall conform to the provisions of this code as they relate to new construction without requiring the unaltered portion(s) of the existing building or building system to comply with this code. Additions, alterations or renovations shall not create an unsafe or hazardous condition or overload existing building systems. An addition shall be deemed to comply with this code if (1) the addition alone complies with this code, or (2) the existing building and addition considered as a single building comply with this code. **Exceptions:** The following need not comply with the provisions of this code, provided the energy use of the building is not increased: 1. Storm windows installed over existing fenestration. 2. Glass only replacements in an existing sash and frame, provided the *U*-factor and the solar heat gain coefficient (SHGC) will be equal to or lower than before the glass replacement. 3. Alterations, renovations or repairs to roof/ceiling, wall or floor cavities which are insulated to full depth with insulation having a minimal nominal value of R-3.0/inch. 4. Alterations, renovations or repairs to walls and floors, where the existing structure is without framing cavities and no new framing cavities are

		created. 5. Reroofing where neither the sheathing nor the insulation is exposed. Roofs without insulation in the cavity and where the sheathing or insulation is exposed during reroofing shall be insulated either above or below the sheathing. 6. Replacement of existing doors that separate *conditioned space* from the exterior shall not require the installation of a vestibule or revolving door, provided, however, that an existing vestibule that separates a *conditioned space* from the exterior shall not be removed. 7. An alteration that replaces less than 50 percent of the luminaires in a space, provided that such alteration does not increase the installed interior lighting power. 8. An alteration that replaces only the bulb and ballast within the existing luminaires in a space, provided that such *alteration* does not increase the installed interior lighting power. **101.4.4 Change in occupancy or use.** Spaces undergoing a change in occupancy that would result in an increase in demand for either fossil fuel or electrical energy shall comply with this code. Where the use in a space changes from one use in Table 505.5.2 to another use in Table 505.5.2, the installed lighting wattage shall comply with Section 505.5. **101.4.5 Change in space conditioning.** Any nonconditioned space that is altered to become conditioned space shall be required to be brought into full compliance with this code. **101.4.6 Statutory exemptions and limitations.** The provisions of sections 101.4.1, 101.4.2, 101.4.4, 101.4.5 and 101.4.6, of this code are subject to any provisions of Article 11 of the New York State Energy Law, as in effect at the time of adoption of this code and as thereafter amended from time to time, which may (1) require certain buildings to be exempt from this code or (2) limit the applicability of this code in the case of renovations of existing buildings. If the provisions of Article 11 of the New York State Energy Law, as in effect at the time of any alteration, renovation or repair to an existing building, require that such building be exempt from this code, then such alteration, renovation or repair to such building need not comply with this code. If the provisions of Article 11 of the New York State Energy Law, as in effect at the time of any alteration, renovation or repair to an existing building, limit the applicability of this code to such alteration, renovation or repair, then the applicability of this code to such alteration, renovation or repair shall be limited to the extent required by the provisions of Article 11 of the New York State Energy Law, as then in effect. **Example:** New York State Energy Law section 11-103(b), as in effect at the time of adoption of this code, provides that in the case of the renovation of an existing building, this code (1) shall apply only if the renovation is a "substantial renovation" (i.e., only if more than fifty percent of any "building subsystem" is replaced), and (2) shall apply only to that portion of the "building subsystem" which is being replaced. If New York State Energy Law section 11-103(b) remains in effect at the time of any alteration, renovation or repair to an existing building, the applicability of this code to such alteration, renovation or repair shall be limited to the extent required by said section 11-103(b).
45	2702.1	**SECTION BC 2702 EMERGENCY POWER SYSTEMS** **2702.1 Installation.** Emergency systems shall be installed in accordance with the *New York City Electrical Code*, NFPA 110 and NFPA 111, and shall have an on-premises fuel supply sufficient for not less than 6-hour full-demand operation of the system. However, for R-2 occupancies required to provide emergency power systems pursuant to the provisions of Section 403.11.2, and for voluntarily installed emergency power systems, natural gas from the public utility street main shall be permitted as fuel supply. **2702.1.1 Stationary generators.** Emergency power generators shall be listed in accordance with UL 2200. **2702.1.2 Capacity.** The emergency power system shall have a capacity and rating that supplies all equipment required to be operational at the same time.
46	2702.2.2	**2702.2.2 Smoke control systems.** Standby power shall be provided for smoke control systems in accordance with Section 909.11. **[F]**

PASSERO ASSOCIATES
engineering architecture

47 | 2902.1

SECTION 2902 MINIMUM PLUMBING FACILITIES

TABLE 2902.1 MINIMUM NUMBER OF REQUIRED PLUMBING FIXTURES[a] (See Sections 2902.2 and 2902.3) [P]

NO.	CLASSIFIC-ATION	OCCUP-ANCY	DESCRIP-TION	WATER CLOSETS		LAVATORIES		DRINKING FOUNTAINS	OTHER[f]
				MALE	FEMALE	MALE	FEMALE		
6	Mercantile (see Sections 2902.2, 2902.4, 2902.4.1 and 2902.4.2)	M	Retail stores, service stations, shops, salesrooms, markets and shopping centers	1 per 500	1 per 500	1 per 750	1 per 750	1 per 1,000	1 service sink

2902.1.1 Unisex toilet and bath fixtures. Fixtures located within unisex toilet bathing rooms complying with Chapter 11 of this Code are permitted to be included in determining the minimum required number of fixtures for assembly and mercantile occupancies. **[P]**

2902.2 Separate facilities. Where plumbing fixtures are required, separate facilities shall be provided for each sex. **[P]**

Exceptions:

2. Separate facilities shall not be required in structures or tenant spaces with a total occupant load, including both employees and customers, of 15 or less.
3. Separate facilities shall not be required in mercantile occupancies in which the maximum occupant load is 50 or less.